No. PF-36AD

TCM®

PARTS CATALOGUE

FORKLIFT TRUCK

GAS., LPG & DIESEL POWERED

FG20C6	FD20C6
FG20T6	FD20T6
FG20W6	FD20W6
FG25C6	FD25C6
FG25T6	FD25T6
FG25W6	FD25W6
FG20C17	FD20C17
FG20T17	FD20T17
FG25C17	FD25C17
FG25T17	FD25T17

TCM CORPORATION

ご使用のまえに

このパーツカタログは，TCM フォークリフトの構成部品を収録しています。

部品ご注文について

部品ご注文の際は，必ず車両の形式・仕様・製造番号（号車），部品番号および注文数を明示してください。車両の製造番号（号車）は車両銘板に表示しています。

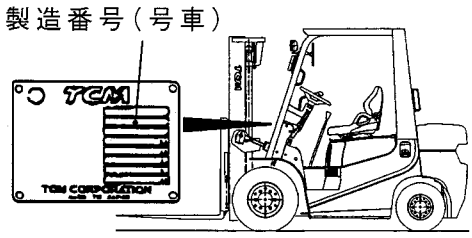

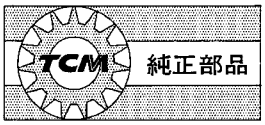

部品は，必ず「TCM 純正部品」をご使用ください。
純正部品以外の部品をご使用になり，故障が発生した場合は保証できません。

ご使用について

部品名称はわかっているが，部品番号を知りたいときは，……

→ 目次を見て，部番リストの図番号（FIG. No.）を見付けます。

組付け位置はわかっているが，部品番号を知りたいときは，……

→ 目次を見て，部番リストの図番号（FIG. No.）を見付けます。

→ イラストの確認，部品番号の検索，号車（号機）の確認をします。

→ 正確な部品番号，形状，名称や履歴がわかります。

略語および記号

ＡＳＳＹ	組立品を示します。
ＲＨ	車両の前方向に向かって右側を示します。
ＬＨ	車両の前方向に向かって左側を示します。
ＡＲ	必要に応じた数を使用します。
＊	セットおよびキットの販売部品を示します。
Ｔ	厚みを示します。
＋	図示していません。
＃	単体販売しません。

部品は，品質向上のため予告なく変更することがありますので，あらかじめご了承ください。
詳細は，TCM 指定整備工場にご相談ください。

INTRODUCTION

This Parts Catalogue contains the component parts of the **TCM FORKLIFT TRUCK**.

How to order parts

When ordering, be sure to specify the model name, specification and serial number (machine number) of your machine, as well as the part number and desired quantity for each part. The machine serial number (machine number) is indicated on the machine name plate.

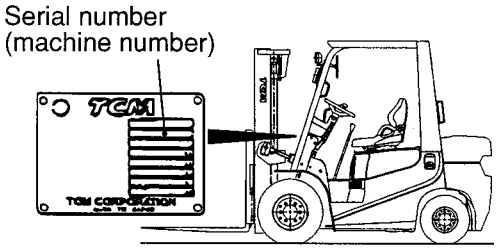

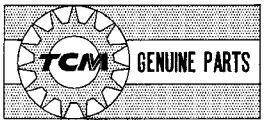

Always use "TCM's Genuine Parts". We cannot guarantee any loss or trouble attributable to other parts than ours.

How to use the Parts Catalogue

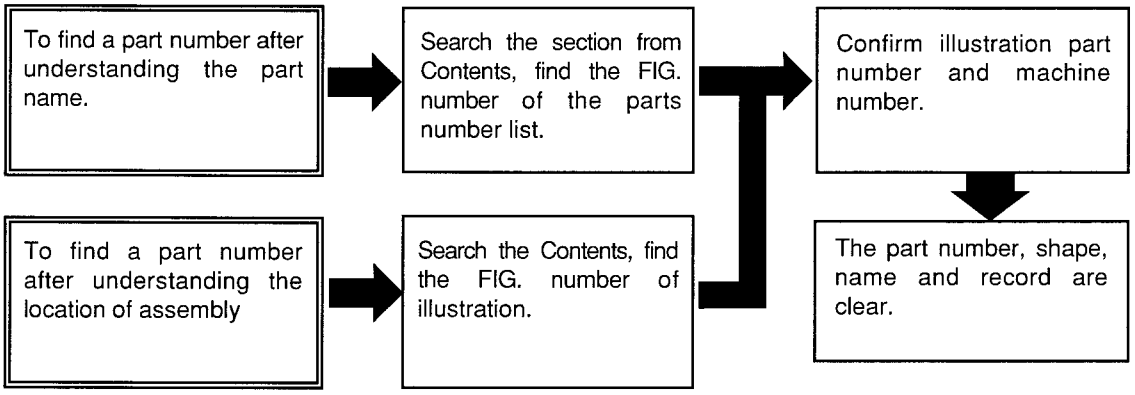

Abbreviations and symbols

ASSY ···	Assembled unit.
RH ·····	Right-hand when viewed forward on the truck.
LH ·····	Left-hand when viewed forward on the truck.
AR ·····	Quantity required.
* ·····	The marketable part set or kit.
T ·····	Thickness.
+ ·····	Not illustrated.
# ·····	Not sold separately.

Materals and specifications subject to change without notice.

CONTENTS 目次

CHASSIS シャーシ

a	FG20C17	d	FG25T17	g	FG25C6	j	FG25W6	m	FD25C17	p	FD20T6	s	FD20W6
b	FG20T17	e	FG20C6	h	FG25T6	k	FD20C17	n	FD25T17	q	FD25C6	t	FD25W6
c	FG25C17	f	FG20T6	i	FG20W6	l	FD20T17	o	FD20C6	r	FD25T6		

SECTION 部門	a	b	c	d	e	f	g	h	i	j	k	l	m	n	o	p	q	r	s	t	FIG. NO.
ENGINE MOUNT (GASOLINE) ｴﾝｼﾞﾝﾏｳﾝﾄ	○	○	○	○	○	○	○	○	○	○											1
ENGINE MOUNT (DIESEL) ｴﾝｼﾞﾝﾏｳﾝﾄ											○	○	○	○	○	○	○	○	○		2
AIR CLEANER (GASOLINE) ｴｱｰｸﾘｰﾅ	○	○	○	○	○	○	○	○	○	○											3
AIR CLEANER (DIESEL) ｴｱｰｸﾘｰﾅ											○	○	○	○							4
AIR CLEANER (DIESEL) ｴｱｰｸﾘｰﾅ											○	○	○	○							4A
AIR CLEANER (DIESEL) ｴｱｰｸﾘｰﾅ															○	○	○	○	○		5
AIR CLEANER (DIESEL) ｴｱｰｸﾘｰﾅ															○	○	○	○	○		5A
AIR DUCT (GASOLINE) ｴｱｰﾀﾞｸﾄ	○	○	○	○	○	○	○	○	○	○											6
AIR DUCT (DIESEL) ｴｱｰﾀﾞｸﾄ											○	○	○	○							7
AIR DUCT (DIESEL) ｴｱｰﾀﾞｸﾄ															○	○	○	○	○		8
PRE CLEANER [CAKB] ﾌﾟﾚｸﾘｰﾅ	○	○	○	○	○	○	○	○	○	○	○	○	○	○	○	○	○	○	○		9
COOLING UNIT (GASOLINE) ｸｰﾘﾝｸﾞﾕﾆｯﾄ	○	○	○	○	○	○	○	○	○	○											10
COOLING UNIT (DIESEL:CLUTCH) ｸｰﾘﾝｸﾞﾕﾆｯﾄ											○		○								11
COOLING UNIT (DIESEL:CLUTCH) ｸｰﾘﾝｸﾞﾕﾆｯﾄ															○		○				12
COOLING UNIT (DIESEL:TOR-CON) ｸｰﾘﾝｸﾞﾕﾆｯﾄ												○		○							13
COOLING UNIT (DIESEL:TOR-CON & OIL CLUTCH) ｸｰﾘﾝｸﾞﾕﾆｯﾄ																○		○	○		14
RADIATOR PARTS & RESERVE TANK ﾗｼﾞｴｰﾀﾊﾟｰﾂ&ﾘｻﾞｰﾌﾞﾀﾝｸ	○	○	○	○	○	○	○	○	○	○	○	○	○	○	○	○	○	○	○		15
FAN SHROUD (GASOLINE:CLUTCH & TOR-CON) ﾌｧﾝｼｭﾗｳﾄﾞ	○	○	○	○	○	○	○	○													16
FAN SHROUD (GASOLINE:OIL CLUTCH) ﾌｧﾝｼｭﾗｳﾄﾞ									○	○											17
FAN SHROUD (DIESEL) ﾌｧﾝｼｭﾗｳﾄﾞ											○	○	○	○							18
FAN SHROUD (DIESEL:CLUTCH & TOR-CON) ﾌｧﾝｼｭﾗｳﾄﾞ															○	○	○	○			19

CONTENTS 目次

CHASSIS シャーシ

a	FG20C17	d	FG25T17	g	FG25C6	j	FG25W6	m	FD25C17	p	FD20T6	s	FD20W6
b	FG20T17	e	FG20C6	h	FG25T6	k	FD20C17	n	FD25T17	q	FD25C6	t	FD25W6
c	FG25C17	f	FG20T6	i	FG20W6	l	FD20T17	o	FD20C6	r	FD25T6		

SECTION 部門	a	b	c	d	e	f	g	h	i	j	k	l	m	n	o	p	q	r	s	t	FIG. NO.
FAN SHROUD (DIESEL:OIL CLUTCH) ファンシュラウド																			○		20
FUEL SYSTEM (SUPPLY) フューエルシステム	○	○	○	○	○	○	○	○	○	○	○	○	○	○	○	○	○	○	○		21
FUEL SYSTEM (SUCTION) フューエルシステム	○	○	○	○	○	○	○	○	○	○	○	○	○	○	○	○	○	○	○		22
EXHAUST SYSTEM (GASOLINE) エキゾーストシステム	○	○	○	○	○	○	○	○	○	○											23
EXHAUST SYSTEM (GASOLINE) エキゾーストシステム	○	○	○	○	○	○	○	○	○	○											23A
EXHAUST SYSTEM (DIESEL) エキゾーストシステム											○	○	○	○							24
EXHAUST SYSTEM (DIESEL) エキゾーストシステム															○	○	○	○	○		25
EXHAUST SYSTEM (DIESEL):[DPF] エキゾーストシステム															○	○	○	○	○		26
POST & TAIL [TUE] ポスト&テイル	○	○	○	○							○	○	○	○							27
POST & TAIL [TUE] ポスト&テイル					○	○	○	○	○	○					○	○	○	○	○		28
POST & TAIL [TUE] ポスト&テイル					○	○	○	○	○	○					○	○	○	○	○		28A
POST & TAIL [TUE/(EXB,EXC,EXE,EXK,EXN)] ポスト&テイル					○	○	○	○							○	○	○	○			29
WIRE HARNESS (DIESEL):[DPF] ワイヤハーネス															○	○	○	○	○		30
FRONT TUBE & JOINT (DIESEL):[DPF] フロントチューブ&ジョイント															○	○	○	○	○		31
COMBINATION METER (GASOLINE) コンビネーションメータ	○	○	○	○	○	○	○	○	○	○											32
COMBINATION METER (DIESEL) コンビネーションメータ											○	○	○	○	○	○	○	○	○		33
COMBINATION METER (GASOLINE):[EECG][EECLP] コンビネーションメータ					○	○	○	○													34
STEERING SHAFT COVER (CLUTCH)(OIL CLUTCH) ステアリングシャフトカバー	○		○		○		○		○	○	○		○		○		○		○		35
STEERING SHAFT COVER (TOR-CON) ステアリングシャフトカバー		○		○		○		○				○		○		○		○			36
ELECTRIC PARTS (GASOLINE) エレクトリックパーツ	○	○	○	○	○	○	○	○	○	○											37
ELECTRIC PARTS (DIESEL) エレクトリックパーツ											○	○	○	○	○	○	○	○	○		38

CONTENTS 目次

CHASSIS シャーシ

a	FG20C17	d	FG25T17	g	FG25C6	j	FG25W6	m	FD25C17	p	FD20T6	s	FD20W6
b	FG20T17	e	FG20C6	h	FG25T6	k	FD20C17	n	FD25T17	q	FD25C6	t	FD25W6
c	FG25C17	f	FG20T6	i	FG20W6	l	FD20T17	o	FD20C6	r	FD25T6		

SECTION 部門	a	b	c	d	e	f	g	h	i	j	k	l	m	n	o	p	q	r	s	t	FIG. NO.
BATTERY (GASOLINE) バッテリ	○	○	○	○	○	○	○	○	○	○											39
BATTERY (DIESEL) バッテリ											○	○	○	○	○	○	○	○	○		40
FRONT GUARD WIRE HARNESS (CLUTCH & OIL CLUTCH) フロントガードワイヤハーネス	○		○		○		○		○	○	○		○		○		○		○		41
FRONT GUARD WIRE HARNESS (TOR-CON) フロントガードワイヤハーネス		○		○		○		○				○		○		○		○			42
ENGINE WIRE HARNESS (GASOLINE:CLUTCH & OIL CLUTCH) エンジンワイヤハーネス	○		○		○		○		○	○											43
ENGINE WIRE HARNESS (GASOLINE:TOR-CON) エンジンワイヤハーネス		○		○		○		○													44
ENGINE WIRE HARNESS (DIESEL:CLUTCH) エンジンワイヤハーネス											○		○								45
ENGINE WIRE HARNESS (DIESEL:CLUTCH & OIL CLUTCH) エンジンワイヤハーネス															○		○		○		46
ENGINE WIRE HARNESS (DIESEL:TOR-CON) エンジンワイヤハーネス												○		○							47
ENGINE WIRE HARNESS (DIESEL:TOR-CON) エンジンワイヤハーネス																○		○			48
BACK BUZZER バックブザー	○	○	○	○	○	○	○	○	○	○	○	○	○	○	○	○	○	○	○		49
LIGHT UNIT ライトユニット	○	○	○	○	○	○	○	○	○	○	○	○	○	○	○	○	○	○	○		50
LICENSE LIGHT ライセンスライト	○	○	○	○	○	○	○	○	○	○	○	○	○	○	○	○	○	○	○		51
LICENSE LIGHT ライセンスライト	○	○	○	○	○	○	○	○	○	○	○	○	○	○	○	○	○	○	○		51A
LICENSE LIGHT [SCB001/RRE] ライセンスライト					○	○	○	○	○	○					○	○	○	○	○		52
LICENSE LIGHT [RRE/RW] ライセンスライト							○	○		○							○	○			53
LICENSE LIGHT [TUE/RRE][RRE/(LPG,LPO,CNG)] ライセンスライト	○	○	○	○	○	○	○	○	○	○	○	○	○	○	○	○	○	○	○		54
REAR WORKING LIGHT [RWLR] リヤーワーキングライト	○	○	○	○	○	○	○	○	○	○	○	○	○	○	○	○	○	○	○		55
REAR WORKING LIGHT [RWLL] リヤーワーキングライト	○	○	○	○	○	○	○	○	○	○	○	○	○	○	○	○	○	○	○		56
REAR WORKING LIGHT [RWL2] リヤーワーキングライト	○	○	○	○	○	○	○	○	○	○	○	○	○	○	○	○	○	○	○		57
REVOLVING LIGHT [RLY][RLR] リボルビングライト	○	○	○	○	○	○	○	○	○	○	○	○	○	○	○	○	○	○	○		58

CONTENTS 目次

CHASSIS シャーシ

a	FG20C17	d	FG25T17	g	FG25C6	j	FG25W6	m	FD25C17	p	FD20T6	s	FD20W6
b	FG20T17	e	FG20C6	h	FG25T6	k	FD20C17	n	FD25T17	q	FD25C6	t	FD25W6
c	FG25C17	f	FG20T6	i	FG20W6	l	FD20T17	o	FD20C6	r	FD25T6		

SECTION 部門	a	b	c	d	e	f	g	h	i	j	k	l	m	n	o	p	q	r	s	t	FIG. NO.
SPOT LIGHT [SPL] スポットライト	○	○	○	○	○	○	○	○	○	○	○	○	○	○	○	○	○	○	○		59
HEATER UNIT [HR] ヒータユニット	○	○	○	○	○	○	○	○	○	○	○	○	○	○	○	○	○	○	○		60
HEATER UNIT [HR] ヒータユニット	○	○	○	○	○	○	○	○	○	○	○	○	○	○	○	○	○	○	○		60A
HEATER VALVE & ELBOW (GASOLINE):[HR] ヒータバルブ&エルボ	○	○	○	○	○	○	○	○	○	○											61
HEATER VALVE & ELBOW (DIESEL):[HR] ヒータバルブ&エルボ											○	○	○	○							62
HEATER VALVE & ELBOW (DIESEL):[HR] ヒータバルブ&エルボ															○	○	○	○	○		63
FAN [FAN] ファン	○	○	○	○	○	○	○	○	○	○	○	○	○	○	○	○	○	○	○		64
AMMETER [AM] アンメータ	○	○	○	○	○	○	○	○	○	○	○	○	○	○	○	○	○	○	○		65
SPEED METER [SM] スピードメータ	○	○	○	○	○	○	○	○	○	○	○	○	○	○	○	○	○	○	○		66
TORQUE CONVERTER THERMOMETER [TTM] トルクコンバータサーモメータ		○		○		○		○				○		○		○		○			67
TORQUE CONVERTER PRESSURE METER [TPM] トルクコンバータプレッシャメータ		○		○		○		○				○		○		○		○			68
SPEED DETECTOR UNIT [SAS] スピードディテクタユニット	○	○	○	○	○	○	○	○	○	○	○	○	○	○	○	○	○	○	○		69
SPEED ALARM SYSTEM [SASB] スピードアラームシステム	○	○	○	○	○	○	○	○	○	○	○	○	○	○	○	○	○	○	○		70
SPEED ALARM SYSTEM [SASR] スピードアラームシステム	○	○	○	○	○	○	○	○	○	○	○	○	○	○	○	○	○	○	○		71
SPEED ALARM SYSTEM [SASC] スピードアラームシステム	○	○	○	○	○	○	○	○	○	○	○	○	○	○	○	○	○	○	○		72
OK MONITOR [OKM] OKモニタ	○	○	○	○	○	○	○	○	○	○	○	○	○	○	○	○	○	○	○		73
DRIVE UNIT MOUNT (CLUTCH) ドライブユニットマウント	○		○		○		○				○		○		○		○				74
CLUTCH (CLUTCH) クラッチ	○		○		○		○				○		○		○		○				75
MISSION CASE (CLUTCH)(OIL CLUTCH) ミッションケース	○		○		○		○		○	○	○		○		○		○		○		76
MISSION GEAR (CLUTCH)(OIL CLUTCH) ミッションギヤー	○		○		○		○		○	○	○		○		○		○		○		77
DRIVE UNIT MOUNT (OIL CLUTCH) ドライブユニットマウント									○	○									○		78

CONTENTS 目次

CHASSIS シャーシ

a	FG20C17	d	FG25T17	g	FG25C6	j	FG25W6	m	FD25C17	p	FD20T6	s	FD20W6
b	FG20T17	e	FG20C6	h	FG25T6	k	FD20C17	n	FD25T17	q	FD25C6	t	FD25W6
c	FG25C17	f	FG20T6	i	FG20W6	l	FD20T17	o	FD20C6	r	FD25T6		

SECTION 部門	a	b	c	d	e	f	g	h	i	j	k	l	m	n	o	p	q	r	s	t	FIG. NO.
CLUTCH (OIL CLUTCH) クラッチ									O	O									O		79
DRIVE UNIT MOUNT (TOR-CON) ドライブユニットマウント		O		O		O		O				O		O		O		O			80
TORQUE CONVERTER CASE (TOR-CON) トルクコンバータケース		O		O		O		O				O		O		O		O			81
CHARGING PUMP (TOR-CON) チャージングポンプ		O		O		O		O				O		O		O		O			82
MISSION CASE (TOR-CON) ミッションケース		O		O		O		O				O		O		O		O			83
CLUTCH PACK (TOR-CON) クラッチパック		O		O		O		O				O		O		O		O			84
CONTROL VALVE (TOR-CON) コントロールバルブ		O		O		O		O				O		O		O		O			85
CONTROL VALVE (TOR-CON) コントロールバルブ		O		O		O		O				O		O		O		O			85A
REDUCTION リダクション	O	O	O	O	O	O	O	O	O	O	O	O	O	O	O	O	O	O	O		86
DIFFERENTIAL ディファレンシャル	O	O	O	O	O	O	O	O	O	O	O	O	O	O	O	O	O	O	O		87
DRIVE AXLE ドライブアクスル	O	O	O	O	O	O	O	O	O	O	O	O	O	O	O	O	O	O	O		88
DRIVE AXLE ドライブアクスル	O	O	O	O	O	O	O	O	O	O	O	O	O	O	O	O	O	O	O		88A
WHEEL BRAKE ホイールブレーキ	O	O	O	O	O	O	O	O	O	O	O	O	O	O	O	O	O	O	O		89
STEERING WHEEL UNIT ステアリングホイールユニット	O	O	O	O	O	O	O	O	O	O	O	O	O	O	O	O	O	O	O		90
STEERING WHEEL UNIT (TOR-CON):[EXN] ステアリングホイールユニット						O		O								O		O			91
GEAR BOX ギヤーボックス	O	O	O	O	O	O	O	O	O	O	O	O	O	O	O	O	O	O	O		92
GEAR BOX [(EXC,EXE,EXK,EXN)/PSS] ギヤーボックス					O	O	O	O							O	O	O	O			93
ORBITROL [EXC][EXE][EXK][EXN][OBT] オービットロール					O	O	O	O							O	O	O	O			94
ORBITROL [EXC][EXE][EXK][EXN][OBT] オービットロール					O	O	O	O							O	O	O	O			94A
DRAG LINK ドラッグリンク	O	O	O	O	O	O	O	O	O	O	O	O	O	O	O	O	O	O	O		95
STEERING AXLE ステアリングアクスル	O	O	O	O	O	O	O	O	O	O	O	O	O	O	O	O	O	O	O		96

CONTENTS 目次

CHASSIS シャーシ

a	FG20C17	d	FG25T17	g	FG25C6	j	FG25W6	m	FD25C17	p	FD20T6	s	FD20W6
b	FG20T17	e	FG20C6	h	FG25T6	k	FD20C17	n	FD25T17	q	FD25C6	t	FD25W6
c	FG25C17	f	FG20T6	i	FG20W6	l	FD20T17	o	FD20C6	r	FD25T6		

SECTION 部門	a	b	c	d	e	f	g	h	i	j	k	l	m	n	o	p	q	r	s	t	FIG. NO.
STEERING AXLE [EXC][EXE][EXK][EXN][OBT] ステアリングアクスル					○	○	○	○							○	○	○	○			97
STEERING AXLE [(EXC,EXE,EXK,EXN)/PSS] ステアリングアクスル					○	○	○	○							○	○	○	○			98
AXLE SUPPORT アクスルサポート	○	○	○	○	○	○	○	○	○	○	○	○	○	○	○	○	○	○	○		99
HUB NUT ハブナット	○	○	○	○	○	○	○	○	○	○	○	○	○	○	○	○	○	○	○		100
FENDER [DD][SDD][TUJSF] フェンダ	○	○	○	○	○	○	○	○	○	○	○	○	○	○	○	○	○	○	○		101
FRONT WHEEL フロントホイール	○	○	○	○	○	○	○	○	○	○	○	○	○	○	○	○	○	○	○		102
FRONT WHEEL [DR F] フロントホイール	○	○	○	○	○	○	○	○	○	○	○	○	○	○	○	○	○	○	○		103
FRONT WHEEL [TJ F][TJSF][T F][TS F] フロントホイール	○	○	○	○	○	○	○	○	○	○	○	○	○	○	○	○	○	○	○		104
FRONT WHEEL [(TJ F,TJSF,T F,TS F)/DR F] フロントホイール	○	○	○	○	○	○	○	○	○	○	○	○	○	○	○	○	○	○	○		105
FRONT WHEEL [TUJF][TUSF][TUWF][TUGF] フロントホイール	○	○	○	○	○	○	○	○	○	○	○	○	○	○	○	○	○	○	○		106
FRONT WHEEL [TUJF/DR F] フロントホイール	○	○	○	○	○	○	○	○	○	○	○	○	○	○	○	○	○	○	○		107
FRONT WHEEL [TRAF] フロントホイール	○	○	○	○	○	○	○	○	○	○	○	○	○	○	○	○	○	○	○		108
FRONT WHEEL [TUJSF] フロントホイール	○	○	○	○	○	○	○	○	○	○	○	○	○	○	○	○	○	○	○		109
FRONT WHEEL [TJ W][TJSW][T W][TS W] フロントホイール	○	○	○	○	○	○	○	○	○	○	○	○	○	○	○	○	○	○	○		110
FRONT WHEEL [TUJW][TUSW][TUWW][TUGW] フロントホイール	○	○	○	○	○	○	○	○	○	○	○	○	○	○	○	○	○	○	○		111
FRONT WHEEL [TJ W70][TJSW70][T W70][TS W70] フロントホイール	○	○	○	○	○	○	○	○	○	○	○	○	○	○	○	○	○	○	○		112
FRONT WHEEL [TUJW70][TUSW70][TUWW70][TUGW70] フロントホイール	○	○	○	○	○	○	○	○	○	○	○	○	○	○	○	○	○	○	○		113
REAR WHEEL リヤーホイール	○	○	○	○	○	○	○	○	○	○	○	○	○	○	○	○	○	○	○		114
REAR WHEEL [DR R] リヤーホイール	○	○	○	○	○	○	○	○	○	○	○	○	○	○	○	○	○	○	○		115
REAR WHEEL [TJ R][TJSR][T R][TS R] リヤーホイール	○	○	○	○	○	○	○	○	○	○	○	○	○	○	○	○	○	○	○		116
REAR WHEEL [(TJ R,TJSR,T R,TS R)/DR R] リヤーホイール	○	○	○	○	○	○	○	○	○	○	○	○	○	○	○	○	○	○	○		117

CONTENTS 目次

CHASSIS シャーシ

a	FG20C17	d	FG25T17	g	FG25C6	j	FG25W6	m	FD25C17	p	FD20T6	s	FD20W6
b	FG20T17	e	FG20C6	h	FG25T6	k	FD20C17	n	FD25T17	q	FD25C6	t	FD25W6
c	FG25C17	f	FG20T6	i	FG20W6	l	FD20T17	o	FD20C6	r	FD25T6		

SECTION 部門	a	b	c	d	e	f	g	h	i	j	k	l	m	n	o	p	q	r	s	t	FIG. NO.
REAR WHEEL [TUJR][TUSR][TUWR][TUGR] ﾘﾔｰﾎｲｰﾙ	○	○	○	○	○	○	○	○	○	○	○	○	○	○	○	○	○	○	○		118
REAR WHEEL [TUJR/DR R] ﾘﾔｰﾎｲｰﾙ	○	○	○	○	○	○	○	○	○	○	○	○	○	○	○	○	○	○	○		119
REAR WHEEL [TRAR] ﾘﾔｰﾎｲｰﾙ	○	○	○	○	○	○	○	○	○	○	○	○	○	○	○	○	○	○	○		120
POWER CYLINDER ﾊﾟﾜｰｼﾘﾝﾀﾞ	○	○	○	○	○	○	○	○	○	○	○	○	○	○	○	○	○	○	○		121
POWER CYLINDER [EXC][EXE][EXK][EXN][OBT] ﾊﾟﾜｰｼﾘﾝﾀﾞ					○	○	○	○							○	○	○	○			122
POWER CYLINDER [(EXC,EXE,EXK,EXN)/PSS] ﾊﾟﾜｰｼﾘﾝﾀﾞ					○	○	○	○							○	○	○	○			123
POWER CYLINDER BOOT [PSB][FC][RINFC] ﾊﾟﾜｰｼﾘﾝﾀﾞﾌﾞｰﾂ	○	○	○	○	○	○	○	○	○	○	○	○	○	○	○	○	○	○	○		124
OVERHEAD GUARD ｵｰﾊﾞﾍｯﾄﾞｶﾞｰﾄﾞ	○	○	○	○	○	○	○	○	○	○	○	○	○	○	○	○	○	○	○		125
OVERHEAD GUARD [EXB][EXC][EXE][EXK][EXN] ｵｰﾊﾞﾍｯﾄﾞｶﾞｰﾄﾞ					○	○	○	○							○	○	○	○			126
FRONT PIPE ﾌﾛﾝﾄﾊﾟｲﾌﾟ					○	○	○	○	○	○					○	○	○	○	○		127
FRONT PIPE ﾌﾛﾝﾄﾊﾟｲﾌﾟ	○	○	○	○							○	○	○	○							128
REAR PIPE ﾘﾔｰﾊﾟｲﾌﾟ	○	○	○	○	○	○	○	○	○	○	○	○	○	○	○	○	○	○	○		129
REAR PIPE [EXB][EXC][EXE][EXK][EXN] ﾘﾔｰﾊﾟｲﾌﾟ					○	○	○	○							○	○	○	○			130
REAR PIPE [RW] ﾘﾔｰﾊﾟｲﾌﾟ							○	○		○							○	○			131
FRONT LAMP BRACKET ﾌﾛﾝﾄﾗﾝﾌﾟﾌﾞﾗｹｯﾄ	○	○	○	○	○	○	○	○	○	○	○	○	○	○	○	○	○	○	○		132
FRONT LAMP BRACKET [HL][BKH] ﾌﾛﾝﾄﾗﾝﾌﾟﾌﾞﾗｹｯﾄ	○	○	○	○	○	○	○	○	○	○	○	○	○	○	○	○	○	○	○		133
REAR LAMP BRACKET ﾘﾔｰﾗﾝﾌﾟﾌﾞﾗｹｯﾄ	○	○	○	○	○	○	○	○	○	○	○	○	○	○	○	○	○	○	○		134
HEAD GUARD PARTS ﾍｯﾄﾞｶﾞｰﾄﾞﾊﾟｰﾂ	○	○	○	○	○	○	○	○	○	○	○	○	○	○	○	○	○	○	○		135
ACCEL PEDAL (GASOLINE) ｱｸｾﾙﾍﾟﾀﾞﾙ	○	○	○	○	○	○	○	○	○	○											136
ACCEL PEDAL (DIESEL) ｱｸｾﾙﾍﾟﾀﾞﾙ											○	○	○	○	○	○	○	○	○		137
FOOT PEDAL (CLUTCH) ﾌｯﾄﾍﾟﾀﾞﾙ	○		○		○		○				○		○		○		○				138

CONTENTS 目次

CHASSIS シャーシ

a	FG20C17	d	FG25T17	g	FG25C6	j	FG25W6	m	FD25C17	p	FD20T6	s	FD20W6
b	FG20T17	e	FG20C6	h	FG25T6	k	FD20C17	n	FD25T17	q	FD25C6	t	FD25W6
c	FG25C17	f	FG20T6	i	FG20W6	l	FD20T17	o	FD20C6	r	FD25T6		

SECTION 部門	a	b	c	d	e	f	g	h	i	j	k	l	m	n	o	p	q	r	s	t	FIG. NO.
FOOT PEDAL (CLUTCH) ﾌｯﾄﾍﾟﾀﾞﾙ	○		○		○		○				○		○		○		○				138A
FOOT PEDAL (CLUTCH):[PC][EXB/PC/OBT] ﾌｯﾄﾍﾟﾀﾞﾙ	○		○		○		○				○		○		○		○				139
FOOT PEDAL (CLUTCH):[PC][EXB/PC/OBT] ﾌｯﾄﾍﾟﾀﾞﾙ	○		○		○		○				○		○		○		○				139A
FOOT PEDAL (TOR-CON) ﾌｯﾄﾍﾟﾀﾞﾙ		○		○		○		○				○		○		○		○			140
FOOT PEDAL (TOR-CON) ﾌｯﾄﾍﾟﾀﾞﾙ		○		○		○		○				○		○		○		○			140A
FOOT PEDAL (OIL CLUTCH) ﾌｯﾄﾍﾟﾀﾞﾙ									○	○									○		141
FOOT PEDAL (OIL CLUTCH) ﾌｯﾄﾍﾟﾀﾞﾙ									○	○									○		141A
FOOT PEDAL (CLUTCH):[EXB/PC] ﾌｯﾄﾍﾟﾀﾞﾙ					○		○								○		○				142
FOOT PEDAL CYLINDER (CLUTCH) ﾌｯﾄﾍﾟﾀﾞﾙｼﾘﾝﾀﾞ	○		○		○		○				○		○		○		○				143
FOOT PEDAL CYLINDER (CLUTCH):[PC][EXB/PC/OBT] ﾌｯﾄﾍﾟﾀﾞﾙｼﾘﾝﾀﾞ	○		○		○		○				○		○		○		○				144
FOOT PEDAL CYLINDER (TOR-CON) ﾌｯﾄﾍﾟﾀﾞﾙｼﾘﾝﾀﾞ		○		○		○		○				○		○		○		○			145
FOOT PEDAL CYLINDER (OIL CLUTCH) ﾌｯﾄﾍﾟﾀﾞﾙｼﾘﾝﾀﾞ									○	○									○		146
FOOT PEDAL CYLINDER (CLUTCH):[EXB/PC] ﾌｯﾄﾍﾟﾀﾞﾙｼﾘﾝﾀﾞ					○		○								○		○				147
BRAKE PIPE (CLUTCH) ﾌﾞﾚｰｷﾊﾟｲﾌﾟ	○		○		○		○				○		○		○		○				148
BRAKE PIPE (CLUTCH):[PC] ﾌﾞﾚｰｷﾊﾟｲﾌﾟ	○		○		○		○				○		○		○		○				149
BRAKE PIPE (TOR-CON) ﾌﾞﾚｰｷﾊﾟｲﾌﾟ		○		○		○		○				○		○		○		○			150
BRAKE PIPE (OIL CLUTCH) ﾌﾞﾚｰｷﾊﾟｲﾌﾟ									○	○									○		151
FOOT PEDAL COVER ﾌｯﾄﾍﾟﾀﾞﾙｶﾊﾞｰ	○	○	○	○	○	○	○	○	○	○	○	○	○	○	○	○	○	○	○		152
BRAKE MASTER CYLINDER ﾌﾞﾚｰｷﾏｽﾀｼﾘﾝﾀﾞ	○	○	○	○	○	○	○	○	○	○	○	○	○	○	○	○	○	○	○		153
BRAKE MASTER CYLINDER ﾌﾞﾚｰｷﾏｽﾀｼﾘﾝﾀﾞ	○	○	○	○	○	○	○	○	○	○	○	○	○	○	○	○	○	○	○		153A
CLUTCH RELEASE CYLINDER (OIL CLUTCH)(CLUTCH):[PC] ｸﾗｯﾁﾘﾘｰｽｼﾘﾝﾀﾞ	○		○		○		○		○	○	○		○		○		○		○		154

CONTENTS 目次

CHASSIS シャーシ

a	FG20C17	d	FG25T17	g	FG25C6	j	FG25W6	m	FD25C17	p	FD20T6	s	FD20W6
b	FG20T17	e	FG20C6	h	FG25T6	k	FD20C17	n	FD25T17	q	FD25C6	t	FD25W6
c	FG25C17	f	FG20T6	i	FG20W6	l	FD20T17	o	FD20C6	r	FD25T6		

SECTION 部門	a	b	c	d	e	f	g	h	i	j	k	l	m	n	o	p	q	r	s	t	FIG. NO.
CLUTCH BOOSTER (OIL CLUTCH)(CLUTCH):[PC] ｸﾗｯﾁﾌﾞｰｽﾀ	○		○		○		○		○	○	○		○		○		○		○		155
BRAKE LEVER ﾌﾞﾚｰｷﾚﾊﾞｰ	○	○	○	○	○	○	○	○	○	○	○	○	○	○	○	○	○	○	○		156
FRAME ﾌﾚｰﾑ	○	○	○	○	○	○	○	○	○	○	○	○	○	○	○	○	○	○	○		157
OIL TANK (CLUTCH)(TOR-CON) ｵｲﾙﾀﾝｸ	○	○	○	○	○	○	○	○			○	○	○	○	○	○	○	○			158
OIL TANK (OIL CLUTCH) ｵｲﾙﾀﾝｸ									○	○									○		159
OIL CAP & LEVEL ｵｲﾙｷｬｯﾌﾟ&ﾚﾍﾞﾙ	○	○	○	○	○	○	○	○	○	○	○	○	○	○	○	○	○	○	○		160
FUEL TANK (GASOLINE) ﾌｭｰｴﾙﾀﾝｸ	○	○	○	○	○	○	○	○	○	○											161
FUEL TANK (DIESEL) ﾌｭｰｴﾙﾀﾝｸ											○	○	○	○	○	○	○	○	○		162
BALANCE WEIGHT ﾊﾞﾗﾝｽｳｴｲﾄ	○	○	○	○	○	○	○	○	○	○	○	○	○	○	○	○	○	○	○		163
BALANCE WEIGHT [RW] ﾊﾞﾗﾝｽｳｴｲﾄ							○	○		○							○	○			164
BALANCE WEIGHT [LPG][LPO][EECLP][CNG] ﾊﾞﾗﾝｽｳｴｲﾄ	○	○	○	○	○	○	○	○	○	○											165
BALANCE WEIGHT [HC] ﾊﾞﾗﾝｽｳｴｲﾄ	○	○	○	○	○	○	○	○	○	○	○	○	○	○	○	○	○	○	○		166
FRONT GUARD ﾌﾛﾝﾄｶﾞｰﾄﾞ	○	○	○	○	○	○	○	○	○	○	○	○	○	○	○	○	○	○	○		167
BONNET ﾎﾞﾝﾈｯﾄ	○	○	○	○	○	○	○	○	○	○	○	○	○	○	○	○	○	○	○		168
BONNET ﾎﾞﾝﾈｯﾄ	○	○	○	○	○	○	○	○	○	○	○	○	○	○	○	○	○	○	○		168A
RADIATOR COVER (-2002.8.25) ﾗｼﾞｴｰﾀｶﾊﾞｰ	○	○	○	○	○	○	○	○	○	○	○	○	○	○	○	○	○	○	○		169
RADIATOR COVER (2002.8.26-) ﾗｼﾞｴｰﾀｶﾊﾞｰ	○	○	○	○	○	○	○	○	○	○	○	○	○	○	○	○	○	○	○		169A
RADIATOR COVER [RW] ﾗｼﾞｴｰﾀｶﾊﾞｰ							○	○		○							○	○			170
RADIATOR COVER [LPG][LPO][EECLP][CNG] ﾗｼﾞｴｰﾀｶﾊﾞｰ	○	○	○	○	○	○	○	○	○	○											171
RADIATOR COVER [SCB001][SCBCR] ﾗｼﾞｴｰﾀｶﾊﾞｰ					○	○	○	○	○	○					○	○	○	○	○		172
BONNET HINGE ﾎﾞﾝﾈｯﾄﾋﾝｼﾞ	○	○	○	○	○	○	○	○	○	○	○	○	○	○	○	○	○	○	○		173

CONTENTS 目次

CHASSIS シャーシ

a	FG20C17	d	FG25T17	g	FG25C6	j	FG25W6	m	FD25C17	p	FD20T6	s	FD20W6
b	FG20T17	e	FG20C6	h	FG25T6	k	FD20C17	n	FD25T17	q	FD25C6	t	FD25W6
c	FG25C17	f	FG20T6	i	FG20W6	l	FD20T17	o	FD20C6	r	FD25T6		

SECTION 部門	a	b	c	d	e	f	g	h	i	j	k	l	m	n	o	p	q	r	s	t	FIG. NO.
FLOOR BOARD ﾌﾛｱﾎﾞｰﾄﾞ	○	○	○	○	○	○	○	○	○	○	○	○	○	○	○	○	○	○	○		174
TRAY ﾄﾚｰ	○	○	○	○	○	○	○	○	○	○	○	○	○	○	○	○	○	○	○		175
TRAY [AW061][AW071][RWL][LPG][LPO][BB SW][BBASW] ﾄﾚｰ	○	○	○	○	○	○	○	○	○	○	○	○	○	○	○	○	○	○	○		176
TRAY [RWL/LPG][(AW061,AW071)/RWL/LPG] ﾄﾚｰ	○	○	○	○	○	○	○	○	○	○											177
TRAY [SM][AM][TPM] ﾄﾚｰ	○	○	○	○	○	○	○	○	○	○	○	○	○	○	○	○	○	○	○		178
TRAY [SM/(LPG,BB SW,BBASW)][SM/(LPG,BB SW,BBASW)/RWL] ﾄﾚｰ	○	○	○	○	○	○	○	○	○	○	○	○	○	○	○	○	○	○	○		179
TRAY [SM/(AW061,AW071)/RWL] ﾄﾚｰ	○	○	○	○	○	○	○	○	○	○	○	○	○	○	○	○	○	○	○		180
FRONT GUARD BOOT [FC] ﾌﾛﾝﾄｶﾞｰﾄﾞﾌﾞｰﾂ	○	○	○	○	○	○	○	○	○	○	○	○	○	○	○	○	○	○	○		181
SEAT ｼｰﾄ					○	○	○	○	○	○					○	○	○	○	○		182
SEAT ｼｰﾄ					○	○	○	○	○	○					○	○	○	○	○		182A
SEAT ｼｰﾄ	○	○	○	○							○	○	○	○							183
SEAT ｼｰﾄ	○	○	○	○							○	○	○	○							183A
SEAT [HGL] ｼｰﾄ					○	○	○	○	○	○					○	○	○	○	○		184
SEAT [HGL] ｼｰﾄ					○	○	○	○	○	○					○	○	○	○	○		184A
SEAT [RW][CNG] ｼｰﾄ							○	○		○							○	○			185
PUMP UNIT (GASOLINE:CLUTCH & TOR-CON) ﾎﾟﾝﾌﾟﾕﾆｯﾄ	○	○	○	○	○	○	○	○													186
PUMP UNIT (DIESEL:CLUTCH & TOR-CON) ﾎﾟﾝﾌﾟﾕﾆｯﾄ															○	○	○	○			187
PUMP UNIT (DIESEL) ﾎﾟﾝﾌﾟﾕﾆｯﾄ											○	○	○	○							188
PUMP UNIT (GASOLINE:OIL CLUTCH) ﾎﾟﾝﾌﾟﾕﾆｯﾄ									○	○											189
PUMP UNIT (DIESEL:OIL CLUTCH) ﾎﾟﾝﾌﾟﾕﾆｯﾄ																			○		190
CONTROL VALVE [2SV] ｺﾝﾄﾛｰﾙﾊﾞﾙﾌﾞ	○	○	○	○	○	○	○	○	○	○	○	○	○	○	○	○	○	○	○		191

CONTENTS 目次

CHASSIS シャーシ

a	FG20C17	d	FG25T17	g	FG25C6	j	FG25W6	m	FD25C17	p	FD20T6	s	FD20W6
b	FG20T17	e	FG20C6	h	FG25T6	k	FD20C17	n	FD25T17	q	FD25C6	t	FD25W6
c	FG25C17	f	FG20T6	i	FG20W6	l	FD20T17	o	FD20C6	r	FD25T6		

SECTION 部門	a	b	c	d	e	f	g	h	i	j	k	l	m	n	o	p	q	r	s	t	FIG. NO.
CONTROL VALVE [3SV] ｺﾝﾄﾛｰﾙﾊﾞﾙﾌﾞ	○	○	○	○	○	○	○	○	○	○	○	○	○	○	○	○	○	○	○		192
CONTROL VALVE [4SV] ｺﾝﾄﾛｰﾙﾊﾞﾙﾌﾞ	○	○	○	○	○	○	○	○	○	○	○	○	○	○	○	○	○	○	○		193
CONTROL VALVE [5SV] ｺﾝﾄﾛｰﾙﾊﾞﾙﾌﾞ	○	○	○	○	○	○	○	○	○	○	○	○	○	○	○	○	○	○	○		194
INLET SECTION ｲﾝﾚｯﾄｾｸｼｮﾝ	○	○	○	○	○	○	○	○	○	○	○	○	○	○	○	○	○	○	○		195
SPOOL SECTION (LIFT) ｽﾌﾟｰﾙｾｸｼｮﾝ	○	○	○	○	○	○	○	○	○	○	○	○	○	○	○	○	○	○	○		196
SPOOL SECTION (TILT) ｽﾌﾟｰﾙｾｸｼｮﾝ	○	○	○	○	○	○	○	○	○	○	○	○	○	○	○	○	○	○	○		197
SPOOL SECTION [3SV][4SV][5SV] ｽﾌﾟｰﾙｾｸｼｮﾝ	○	○	○	○	○	○	○	○	○	○	○	○	○	○	○	○	○	○	○		198
CONTROL VALVE FITTING ｺﾝﾄﾛｰﾙﾊﾞﾙﾌﾞﾌｨｯﾃｨﾝｸﾞ	○	○	○	○	○	○	○	○	○	○	○	○	○	○	○	○	○	○	○		199
VALVE CONTROL [2SV] ﾊﾞﾙﾌﾞｺﾝﾄﾛｰﾙ	○	○	○	○	○	○	○	○	○	○	○	○	○	○	○	○	○	○	○		200
VALVE CONTROL [3SV] ﾊﾞﾙﾌﾞｺﾝﾄﾛｰﾙ	○	○	○	○	○	○	○	○	○	○	○	○	○	○	○	○	○	○	○		201
VALVE CONTROL [4SV] ﾊﾞﾙﾌﾞｺﾝﾄﾛｰﾙ	○	○	○	○	○	○	○	○	○	○	○	○	○	○	○	○	○	○	○		202
VALVE CONTROL [5SV] ﾊﾞﾙﾌﾞｺﾝﾄﾛｰﾙ	○	○	○	○	○	○	○	○	○	○	○	○	○	○	○	○	○	○	○		203
VALVE CONTROL KNOB ﾊﾞﾙﾌﾞｺﾝﾄﾛｰﾙﾉﾌﾞ	○	○	○	○	○	○	○	○	○	○	○	○	○	○	○	○	○	○	○		204
HYDRAULIC LINE (MAIN)(1/3)(GASOLINE:CLUTCH & TOR-CON) ﾊｲﾄﾞﾛﾘｯｸﾗｲﾝ(ﾒｲﾝ)(1/3)	○	○	○	○	○	○	○	○													205
HYDRAULIC LINE (MAIN)(1/3)(DIESEL:CLUTCH & TOR-CON) ﾊｲﾄﾞﾛﾘｯｸﾗｲﾝ(ﾒｲﾝ)(1/3)															○	○	○	○			206
HYDRAULIC LINE (MAIN)(1/3)(DIESEL) ﾊｲﾄﾞﾛﾘｯｸﾗｲﾝ(ﾒｲﾝ)(1/3)											○	○	○	○							207
HYDRAULIC LINE (MAIN)(1/3)(GASOLINE:OIL CLUTCH) ﾊｲﾄﾞﾛﾘｯｸﾗｲﾝ(ﾒｲﾝ)(1/3)									○	○											208
HYDRAULIC LINE (MAIN)(1/3)(DIESEL:OIL CLUTCH) ﾊｲﾄﾞﾛﾘｯｸﾗｲﾝ(ﾒｲﾝ)(1/3)																			○		209
HYDRAULIC LINE (MAIN)(2/3) ﾊｲﾄﾞﾛﾘｯｸﾗｲﾝ(ﾒｲﾝ)(2/3)	○	○	○	○	○	○	○	○	○	○	○	○	○	○	○	○	○	○	○		210
HYDRAULIC LINE (MAIN)(2/3)[EXC][EXE][EXK][EXN][OBT] ﾊｲﾄﾞﾛﾘｯｸﾗｲﾝ(ﾒｲﾝ)(2/3)					○	○	○	○							○	○	○	○			211
HYDRAULIC LINE (MAIN)(2/3)[(EXC,EXE,EXK,EXN)/PSS] ﾊｲﾄﾞﾛﾘｯｸﾗｲﾝ(ﾒｲﾝ)(2/3)					○	○	○	○							○	○	○	○			212

CONTENTS 目次

CHASSIS シャーシ

a	FG20C17	d	FG25T17	g	FG25C6	j	FG25W6	m	FD25C17	p	FD20T6	s	FD20W6
b	FG20T17	e	FG20C6	h	FG25T6	k	FD20C17	n	FD25T17	q	FD25C6	t	FD25W6
c	FG25C17	f	FG20T6	i	FG20W6	l	FD20T17	o	FD20C6	r	FD25T6		

SECTION 部門	a	b	c	d	e	f	g	h	i	j	k	l	m	n	o	p	q	r	s	t	FIG. NO.
HYDRAULIC LINE (MAIN)(3/3) ﾊｲﾄﾞﾛﾘｯｸﾗｲﾝ(ﾒｲﾝ)(3/3)	○	○	○	○	○	○	○	○	○	○	○	○	○	○	○	○	○	○	○		213
HYDRAULIC LINE (TOR-CON)(GASOLINE) ﾊｲﾄﾞﾛﾘｯｸﾗｲﾝ(ﾄﾙｺﾝ)		○		○		○		○													214
HYDRAULIC LINE (TOR-CON)(DIESEL) ﾊｲﾄﾞﾛﾘｯｸﾗｲﾝ(ﾄﾙｺﾝ)												○		○		○		○			215
HYDRAULIC LINE (OIL CLUTCH)(GASOLINE) ﾊｲﾄﾞﾛﾘｯｸﾗｲﾝ(ｵｲﾙｸﾗｯﾁ)									○	○											216
HYDRAULIC LINE (OIL CLUTCH)(DIESEL) ﾊｲﾄﾞﾛﾘｯｸﾗｲﾝ(ｵｲﾙｸﾗｯﾁ)																			○		217
TILT CYLINDER ﾃｨﾙﾄｼﾘﾝﾀﾞ	○	○	○	○	○	○	○	○	○	○	○	○	○	○	○	○	○	○	○		218
TILT BOOT [TLB][FC] ﾃｨﾙﾄﾌﾞｰﾂ	○	○	○	○	○	○	○	○	○	○	○	○	○	○	○	○	○	○	○		219
DECAL (1/2) ﾃﾞｶﾙ(1/2)	○	○	○	○	○	○	○	○	○	○	○	○	○	○	○	○	○	○	○		220
DECAL (2/2) ﾃﾞｶﾙ(2/2)	○	○	○	○	○	○	○	○	○	○	○	○	○	○	○	○	○	○	○		221
DECAL (2/2)[EXB] ﾃﾞｶﾙ(2/2)					○	○	○	○							○	○	○	○			222
DECAL (2/2)[EXC] ﾃﾞｶﾙ(2/2)					○	○	○	○							○	○	○	○			223
DECAL (2/2)[EXE] ﾃﾞｶﾙ(2/2)					○	○	○	○							○	○	○	○			224
DECAL (2/2)[EXK] ﾃﾞｶﾙ(2/2)					○	○	○	○							○	○	○	○			225
DECAL (2/2)[EXN] ﾃﾞｶﾙ(2/2)					○	○	○	○							○	○	○	○			226
SERVICE TOOL [TO][EX] ｻｰﾋﾞｽﾂｰﾙ	○	○	○	○	○	○	○	○	○	○	○	○	○	○	○	○	○	○	○		227
LPG KIT [LPG] LPGｷｯﾄ	○	○	○	○	○	○	○	○	○	○											228
LPG WARNING LIGHT [LPG/LPGL] & WARNING BUZZER [LPG/LPGB] LPGﾜｰﾆﾝｸﾞﾗｲﾄ&ﾜｰﾆﾝｸﾞﾌﾞｻﾞｰ	○	○	○	○	○	○	○	○	○	○											229
BOMBE [LPG][LPO][LPS][EECLP] ﾎﾞﾝﾍﾞ	○	○	○	○	○	○	○	○	○	○											230
LPG HOSE [LPG][EECLP] LPGﾎｰｽ	○	○	○	○	○	○	○	○	○	○											231
LPO KIT [LPO] LPOｷｯﾄ	○	○	○	○	○	○	○	○	○	○											232
LPO WARNING BUZZER [LPO/LPGB] LPOﾜｰﾆﾝｸﾞﾌﾞｻﾞｰ	○	○	○	○	○	○	○	○	○	○											233

CONTENTS 目次

CHASSIS シャーシ

a	FG20C17	d	FG25T17	g	FG25C6	j	FG25W6	m	FD25C17	p	FD20T6	s	FD20W6
b	FG20T17	e	FG20C6	h	FG25T6	k	FD20C17	n	FD25T17	q	FD25C6	t	FD25W6
c	FG25C17	f	FG20T6	i	FG20W6	l	FD20T17	o	FD20C6	r	FD25T6		

SECTION 部門	a	b	c	d	e	f	g	h	i	j	k	l	m	n	o	p	q	r	s	t	FIG. NO.
LPO HOSE [LPO] LPOホース	○	○	○	○	○	○	○	○	○	○											234
CARBURETOR [LPO] キャブレタ	○	○	○	○	○	○	○	○	○	○											235
KB-CONVERTER [LPO] KBコンバータ	○	○	○	○	○	○	○	○	○	○											236
FUEL-LOCK FILTER [LPO] フューエルロックフィルタ	○	○	○	○	○	○	○	○	○	○											237
FIRE EXTINGUISHER [FE][FE M] ファイヤイクスティングイッシャ	○	○	○	○	○	○	○	○	○	○	○	○	○	○	○	○	○	○	○		238

CONTENTS 目次

MAST マスト

a	FG20C17	d	FG25T17	g	FG25C6	j	FG25W6	m	FD25C17	p	FD20T6	s	FD20W6
b	FG20T17	e	FG20C6	h	FG25T6	k	FD20C17	n	FD25T17	q	FD25C6	t	FD25W6
c	FG25C17	f	FG20T6	i	FG20W6	l	FD20T17	o	FD20C6	r	FD25T6		

SECTION 部門	a	b	c	d	e	f	g	h	i	j	k	l	m	n	o	p	q	r	s	t	FIG. NO.
[VM39A]																					
FORK [VM39A] フォーク	○	○	○	○	○	○	○	○	○	○	○	○	○	○	○	○	○	○	○	○	239
LIFT BRACKET [VM39A] リフトブラケット	○	○	○	○	○	○	○	○	○	○	○	○	○	○	○	○	○	○	○	○	240
BACKREST [VM39A] バックレスト	○	○	○	○	○	○	○	○	○	○	○	○	○	○	○	○	○	○	○	○	241
MAST [VM39A] マスト	○	○	○	○	○	○	○	○	○	○	○	○	○	○	○	○	○	○	○	○	242
LIFT CYLINDER [VM39A] リフトシリンダ	○	○	○	○	○	○	○	○	○	○	○	○	○	○	○	○	○	○	○	○	243
MAST PIPING [VM39A] マストパイピング	○	○	○	○	○	○	○	○	○	○	○	○	○	○	○	○	○	○	○	○	244
[VFM39A]																					
FORK [VFM39A] フォーク	○	○	○	○	○	○	○	○	○	○	○	○	○	○	○	○	○	○	○	○	245
LIFT BRACKET [VFM39A] リフトブラケット	○	○	○	○	○	○	○	○	○	○	○	○	○	○	○	○	○	○	○	○	246
BACKREST [VFM39A] バックレスト	○	○	○	○	○	○	○	○	○	○	○	○	○	○	○	○	○	○	○	○	247
MAST [VFM39A] マスト	○	○	○	○	○	○	○	○	○	○	○	○	○	○	○	○	○	○	○	○	248
TILT GAUGE [VFM39A/(TG,PPC,PR,PRC,MPC)] ティルトゲージ	○	○	○	○	○	○	○	○	○	○	○	○	○	○	○	○	○	○	○	○	249
LIFT CYLINDER (FRONT)[VFM39A] リフトシリンダ(フロント)	○	○	○	○	○	○	○	○	○	○	○	○	○	○	○	○	○	○	○	○	250
LIFT CYLINDER (REAR) [VFM39A] リフトシリンダ(リヤー)	○	○	○	○	○	○	○	○	○	○	○	○	○	○	○	○	○	○	○	○	251
MAST PIPING [VFM39A] マストパイピング	○	○	○	○	○	○	○	○	○	○	○	○	○	○	○	○	○	○	○	○	252

CONTENTS 目次

MAST マスト

a	FG20C17	d	FG25T17	g	FG25C6	j	FG25W6	m	FD25C17	p	FD20T6	s	FD20W6
b	FG20T17	e	FG20C6	h	FG25T6	k	FD20C17	n	FD25T17	q	FD25C6	t	FD25W6
c	FG25C17	f	FG20T6	i	FG20W6	l	FD20T17	o	FD20C6	r	FD25T6		

SECTION 部門	a	b	c	d	e	f	g	h	i	j	k	l	m	n	o	p	q	r	s	t	FIG. NO.
[VFHM39A]																					
FORK [VFHM39A] フォーク	○	○	○	○	○	○	○	○	○	○	○	○	○	○	○	○	○	○	○	○	253
LIFT BRACKET [VFHM39A] リフトブラケット	○	○	○	○	○	○	○	○	○	○	○	○	○	○	○	○	○	○	○	○	254
BACKREST [VFHM39A] バックレスト	○	○	○	○	○	○	○	○	○	○	○	○	○	○	○	○	○	○	○	○	255
MAST [VFHM39A] マスト	○	○	○	○	○	○	○	○	○	○	○	○	○	○	○	○	○	○	○	○	256
TILT GAUGE [VFHM39A/(TG,PPC,PR,PRC,MPC)] ティルトゲージ	○	○	○	○	○	○	○	○	○	○	○	○	○	○	○	○	○	○	○	○	257
LIFT CYLINDER(FRONT) [VFHM39A] リフトシリンダ(フロント)	○	○	○	○	○	○	○	○	○	○	○	○	○	○	○	○	○	○	○	○	258
LIFT CYLINDER(REAR) [VFHM39A] リフトシリンダ(リヤー)	○	○	○	○	○	○	○	○	○	○	○	○	○	○	○	○	○	○	○	○	259
MAST PIPING [VFHM39A] マストパイピング	○	○	○	○	○	○	○	○	○	○	○	○	○	○	○	○	○	○	○	○	260

FIG.1 ENGINE MOUNT (GASOLINE)

(F5021010) エンジンマウント

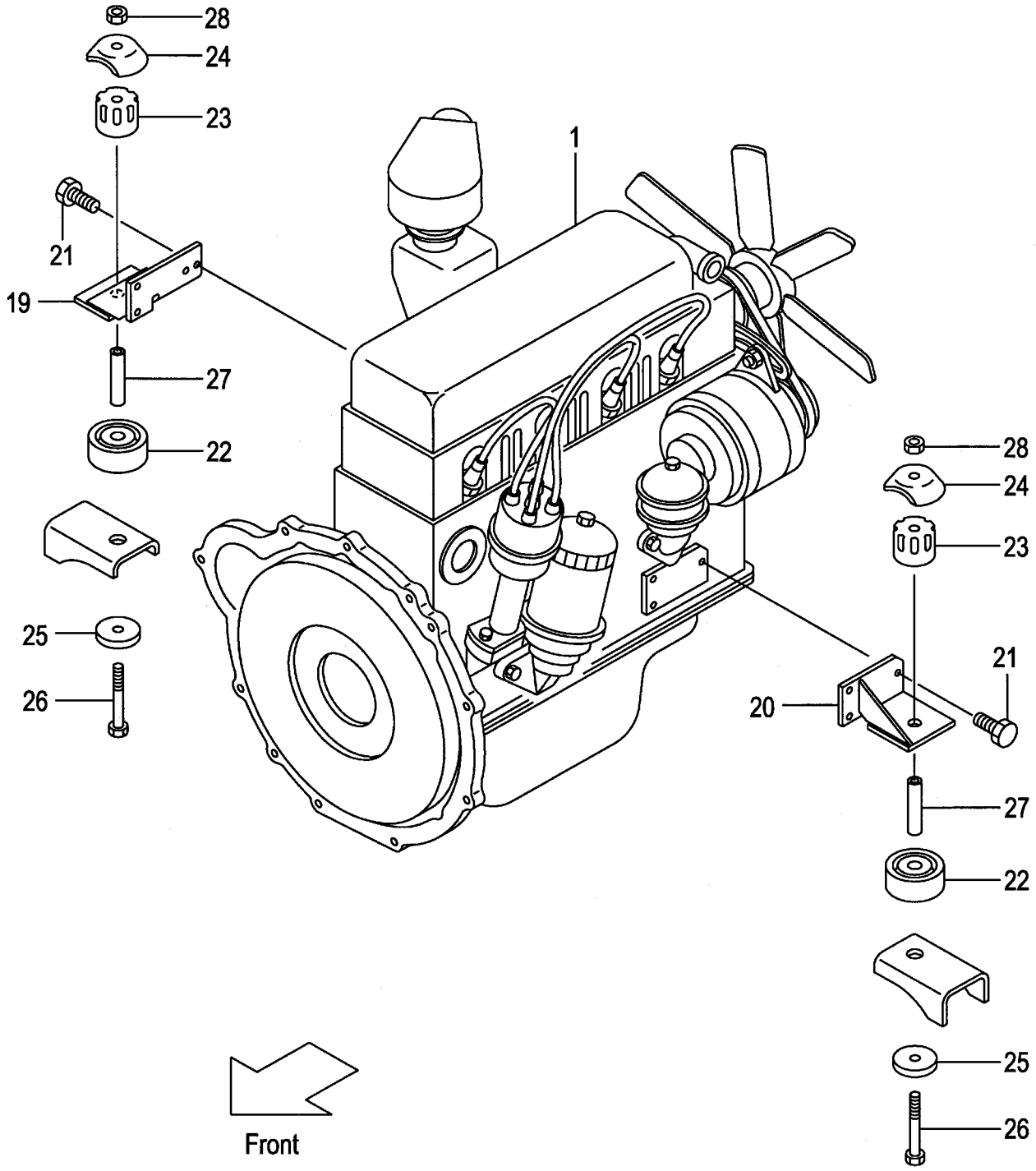

A:FG20C17 FG25C17 D:FG20T6 FG25T6
B:FG20T17 FG25T17 E:FG20W6 FG25W6
C:FG20C6 FG25C6

FIG.1
(F5021010)

Item No	Part No.	Mark	Description		Req'd	Remarks : Serial No.
1	218G1-00101		ENGINE,H15-RMT000	ｴﾝｼﾞﾝ	1	A
-	218H1-00101		ENGINE,H15-RAT000	ｴﾝｼﾞﾝ	1	B
-	236F1-00101		ENGINE,H20-RMT100	ｴﾝｼﾞﾝ	1	C
-	236G1-00101		ENGINE,H20-RAT100	ｴﾝｼﾞﾝ	1	D
-	236S1-00101		ENGINE,H20	ｴﾝｼﾞﾝ	1	E
-	536G4-70101		ENGINE,H20-RAT100	ｴﾝｼﾞﾝ	1	D [EXK]
-	536F7-60101		ENGINE,H20-RMT100	ｴﾝｼﾞﾝ	1	C [RCBCR]
-	536G7-60101		ENGINE,H20-RAT100	ｴﾝｼﾞﾝ	1	D [RCBCR]
-	536S7-60101		ENGINE,H20	ｴﾝｼﾞﾝ	1	E [RCBCR]
-	536F1-70101		ENGINE,H20	ｴﾝｼﾞﾝ	1	C [EECG]
-	536G1-70101		ENGINE,H20	ｴﾝｼﾞﾝ	1	D [EECG]
-	536F1-70111		ENGINE,H20	ｴﾝｼﾞﾝ	1	C [EECLP]
-	536G1-70111		ENGINE,H20	ｴﾝｼﾞﾝ	1	D [EECLP]
-	518G2-70101		ENGINE,H15-RMT000	ｴﾝｼﾞﾝ	1	A:11014- [HCS]
-	518H2-70101		ENGINE,H15-RAT000	ｴﾝｼﾞﾝ	1	B:11014- [HCS]
-	536F4-70101		ENGINE,H20-RMT100	ｴﾝｼﾞﾝ	1	C:65173- [HCS]
-	536G4-70101		ENGINE,H20-RAT100	ｴﾝｼﾞﾝ	1	D:65173- [HCS]
-	536S4-70101		ENGINE,H20	ｴﾝｼﾞﾝ	1	E:65173- [HCS]
2	01400-00008	+	NUT	ﾅｯﾄ	2	
3	02010-00008	+	WASHER	ﾜｯｼｬ	2	
4	02000-00008	+	WASHER	ﾜｯｼｬ	2	
5	01100-05010	+	BOLT	ﾎﾞﾙﾄ	1	
6	02010-00005	+	WASHER	ﾜｯｼｬ	1	
7	01183-08050	+	BOLT	ﾎﾞﾙﾄ	2	C,D [EECG][EECLP]
8	531B2-72071	+	COVER,ECU	ｶﾊﾞｰ	1	C,D [EECG][EECLP]
9	214A2-42611	+	SCREW	ｽｸﾘｭ	1	C,D [EECG][EECLP]
10	518G0-52001	+	BRACKET	ﾌﾞﾗｹｯﾄ	1	C,D [EECLP]
11	531B2-72041	+	TUBE	ﾁｭｰﾌﾞ	1	C,D [EECLP]
12	531B2-72051	+	HOSE,GAS	ﾎｰｽ	1	C,D [EECLP]
13	531B2-72061	+	HOSE,WATER	ﾎｰｽ	2	C,D [EECLP]

FIG.1 ENGINE MOUNT (GASOLINE)

(F5021010) エンジンマウント

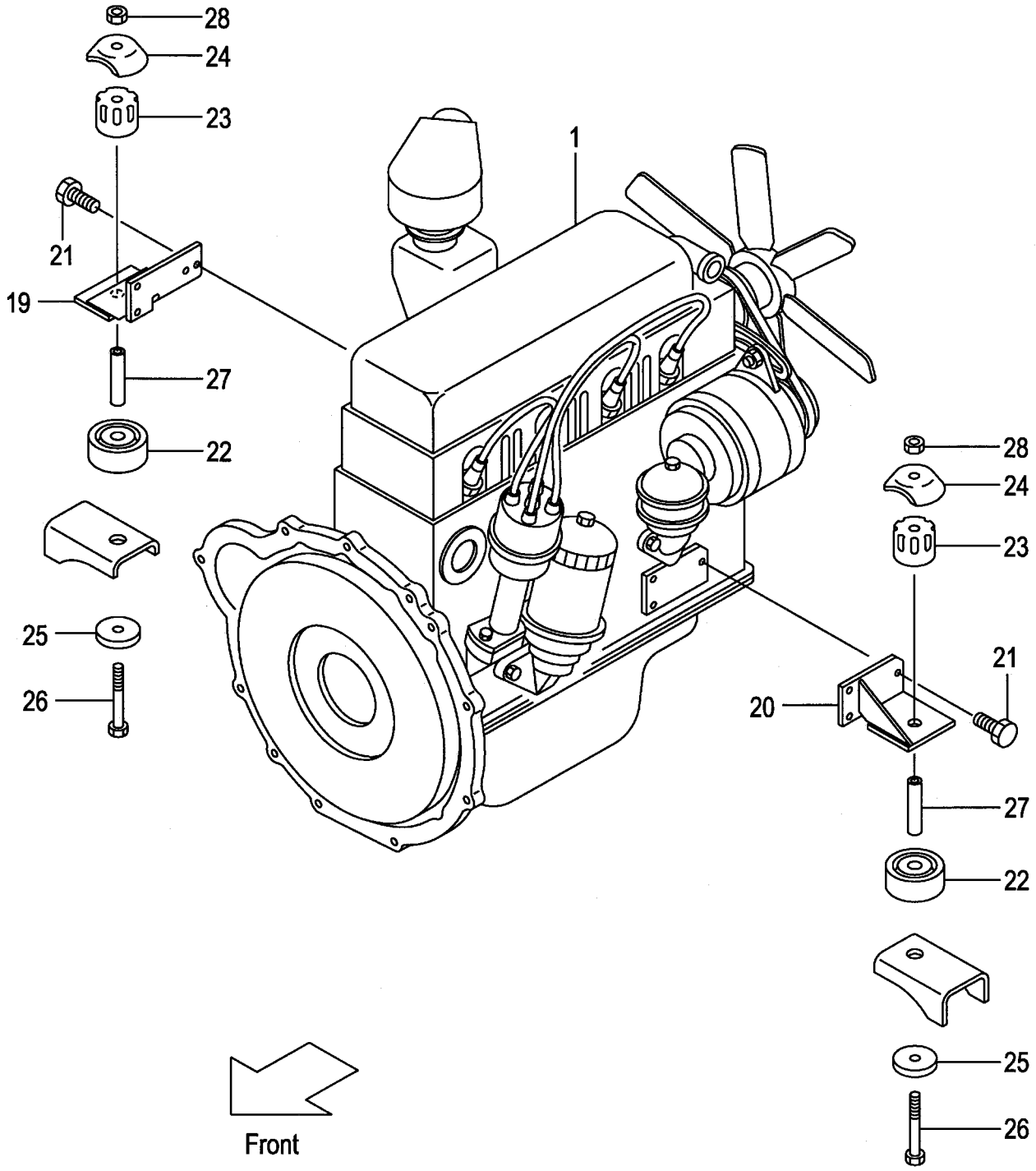

A:FG20C17 FG25C17 D:FG20T6 FG25T6
B:FG20T17 FG25T17 E:FG20W6 FG25W6
C:FG20C6 FG25C6

FIG.1
(F5021010)

Item No	Part No.	Mark	Description		Req'd	Remarks : Serial No.
14	04911-00016	+	CLIP	ｸﾘｯﾌﾟ	2	C,D [EECLP]
15	04911-00024	+	CLIP	ｸﾘｯﾌﾟ	4	C,D [EECLP]
16	01183-08045	+	BOLT	ﾎﾞﾙﾄ	2	C,D [EECLP]
17	01183-08020	+	BOLT	ﾎﾞﾙﾄ	2	C,D [EECLP]
18	531B2-72091	+	LABEL,FUEL	ﾗﾍﾞﾙ	1	C,D [EECLP]
19	218G1-02351		BRACKET,RH	ﾌﾞﾗｹｯﾄ	1	
20	218G1-02301		BRACKET,LH	ﾌﾞﾗｹｯﾄ	1	
21	01218-10025		BOLT	ﾎﾞﾙﾄ	7	
22	216G1-02111		RUBBER,UNDER	ﾗﾊﾞｰ	2	
23	214A1-02111		RUBBER,UPPER	ﾗﾊﾞｰ	2	
24	214A1-02121		CAP	ｷｬｯﾌﾟ	2	
25	23651-02001		WASHER	ﾜｯｼｬ	2	
26	01103-10097		BOLT	ﾎﾞﾙﾄ	2	
27	234A1-02071		COLLAR	ｶﾗｰ	2	
28	23651-02011		NUT	ﾅｯﾄ	2	
29	531B4-70011	+	KIT,HIGH-COOLING	ﾊｲｸｰﾘﾝｸﾞｷｯﾄ	1	C:65173- D:65173- E:65173- [HCS] INC.30
30	226B1-02101	+	PULLEY	ﾌﾟｰﾘ	1	C:65173- D:65173- E:65173- [HCS]

FIG.2 ENGINE MOUNT (DIESEL)

(F5021020) エンジンマウント

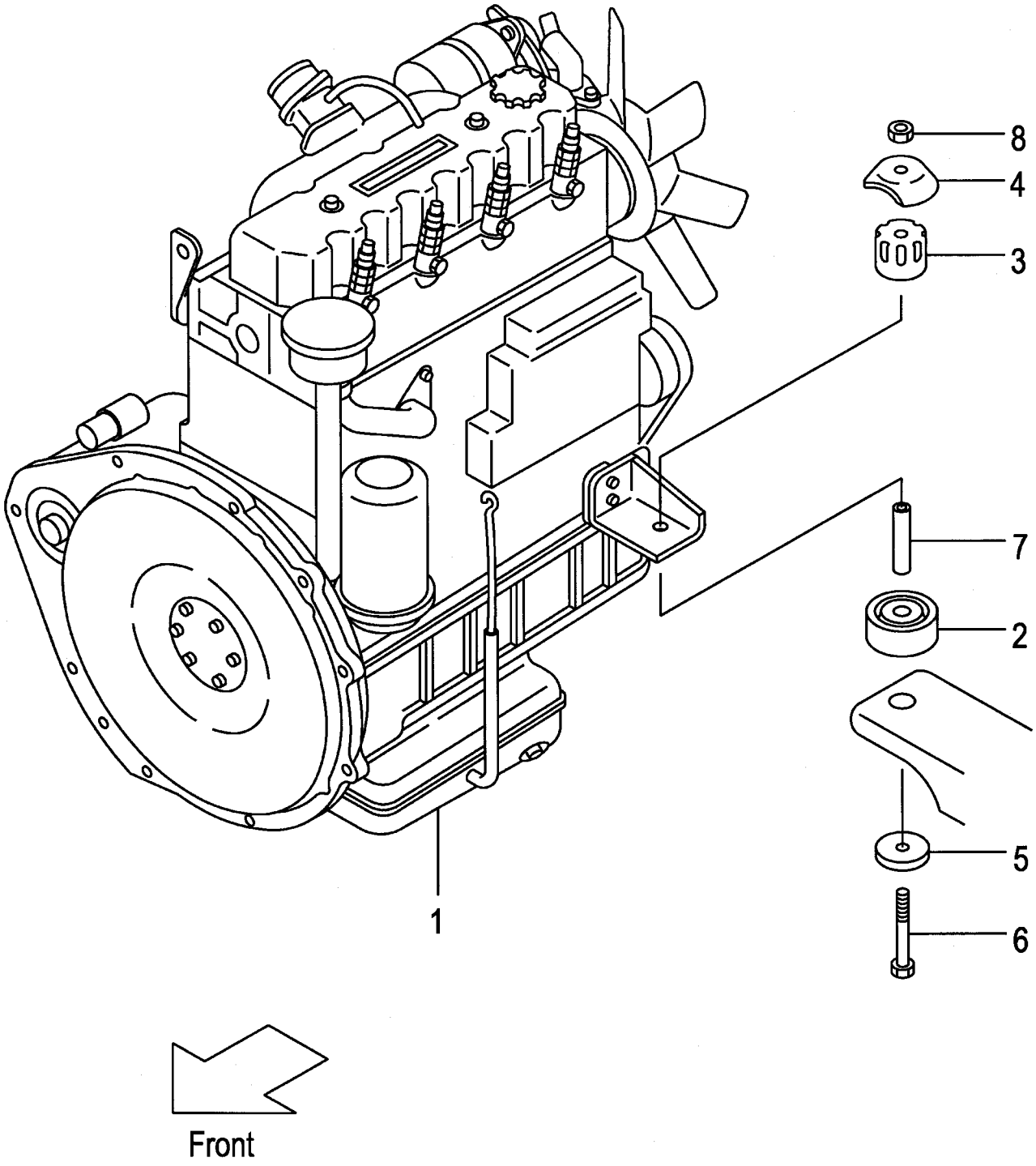

FIG.2
(F5021020)

A:FD20C17 FD20T17 FD25C17 FD25T17 C:FD20T6 FD25T6
B:FD20C6 FD25C6 D:FD20W6 FD25W6

Item No	Part No.	Mark	Description		Req'd	Remarks : Serial No.
1	220F1-00202		ENGINE,4LB1-TPA-01	ｴﾝｼﾞﾝ	1	A
-	238F1-00101		ENGINE,C240PKJ	ｴﾝｼﾞﾝ	1	B,C:1-87725
-	238F1-00102		ENGINE,C240PKJ	ｴﾝｼﾞﾝ	1	B,C:87726-
-	238S1-00101		ENGINE,C240PKJ-03	ｴﾝｼﾞﾝ	1	D
-	538G3-80201		ENGINE,C240PKJ-20	ｴﾝｼﾞﾝ	1	C:1-87646
						[EXE]
-	538G3-80202		ENGINE,C240PKJ-20	ｴﾝｼﾞﾝ	1	C:87647-87725
						[EXE]
-	238F1-00102		ENGINE,C240PKJ	ｴﾝｼﾞﾝ	1	C:87726-
						[EXE]
-	519M2-60101		ENGINE,C240PKJ-06	ｴﾝｼﾞﾝ	1	C:1-87646
						[EXN]
-	519M2-60102		ENGINE,C240PKJ-06	ｴﾝｼﾞﾝ	1	C:87647-
						[EXN]
-	538F7-60102		ENGINE,C240PKJ	ｴﾝｼﾞﾝ	1	B,C:1-87725
						[RCBCR]
-	538F7-60103		ENGINE,C240PKJ	ｴﾝｼﾞﾝ	1	B,C:87726-
						[RCBCR]
-	538S7-60102		ENGINE,C240PKJ-03	ｴﾝｼﾞﾝ	1	D
						[RCBCR]
2	216G1-02111		RUBBER,UNDER	ﾗﾊﾞｰ	2	
3	214A1-02111		RUBBER,UPPER	ﾗﾊﾞｰ	2	
4	214A1-02121		CAP	ｷｬｯﾌﾟ	2	
5	23651-02001		WASHER	ﾜｯｼｬ	2	
6	01103-10097		BOLT	ﾎﾞﾙﾄ	2	
7	234A1-02071		COLLAR	ｶﾗｰ	2	
8	23651-02011		NUT	ﾅｯﾄ	2	
9	211L2-10011	+	PULLEY	ﾌﾟｰﾘ	1	B,C,D
						[HCS]

FIG.3 AIR CLEANER (GASOLINE)

(F5021030) エアークリーナ

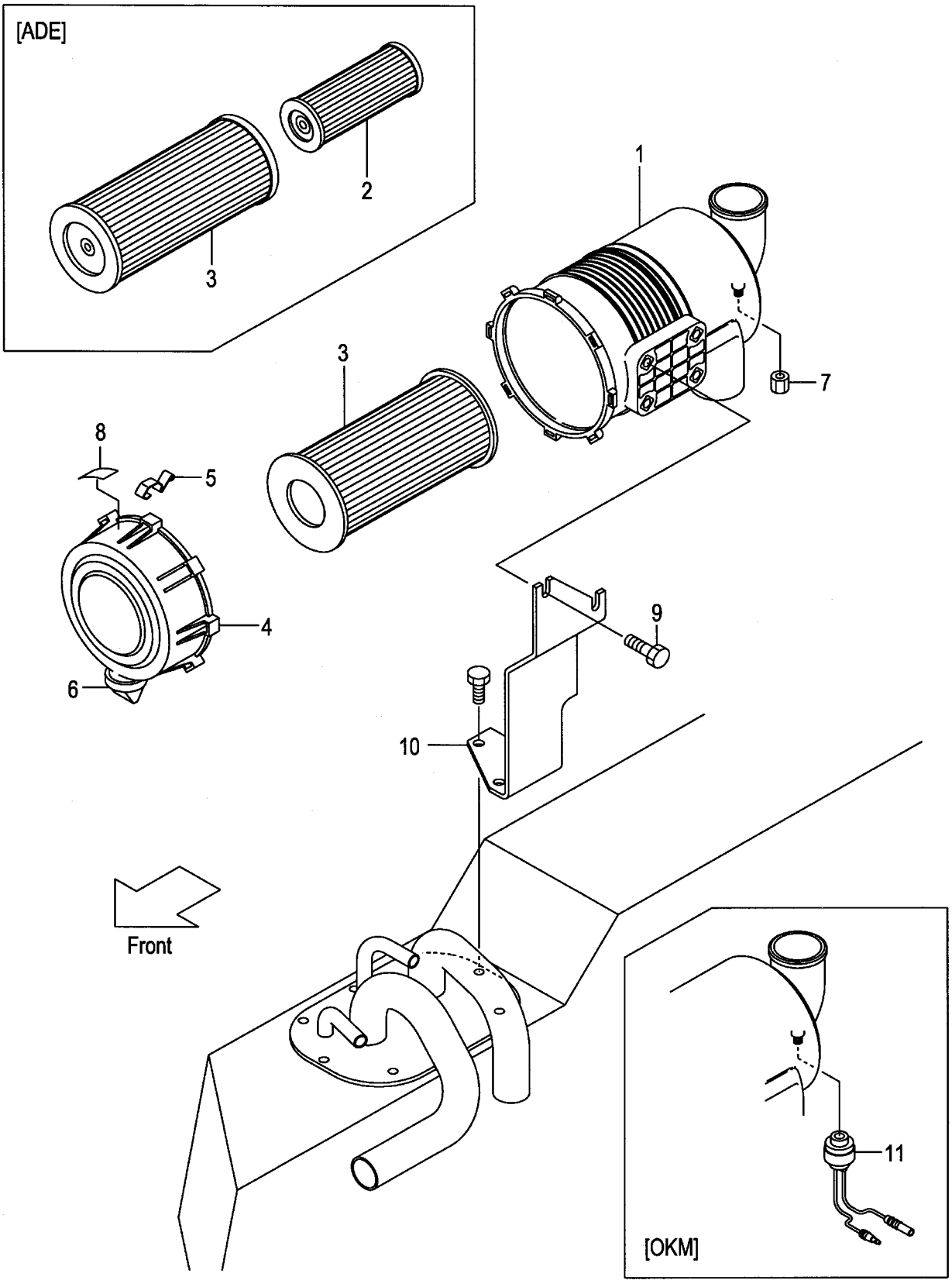

A:FG20C17 FG25C17 D:FG20T6 FG25T6
B:FG20T17 FG25T17 E:FG20W6 FG25W6
C:FG20C6 FG25C6

FIG.3
(F5021030)

Item No	Part No.	Mark	Description		Req'd	Remarks : Serial No.
A1	216G1-02451		CLEANER-ASSY,AIR	ｴｱｰｸﾘｰﾅｱｯｾﾝ	1	INC.1,3-8
-	516G0-60101		CLEANER-ASSY,AIR	ｴｱｰｸﾘｰﾅｱｯｾﾝ	1	[ADE] INC.1-8
1	216G1-02481		BODY	ﾎﾞﾃﾞｨ	1	
2	213T1-02021		ELEMENT,INNER	ｴﾚﾒﾝﾄ	1	[ADE]
3	256C1-08011		ELEMENT,OUTER	ｴﾚﾒﾝﾄ	1	
-	213T1-02011		ELEMENT,OUTER	ｴﾚﾒﾝﾄ	1	[ADE]
4	216G1-02461		COVER	ｶﾊﾞｰ	1	
5	216G1-02471		LATCH	ﾗｯﾁ	3	
6	216G1-02491		VALVE,VACUATOR	ﾊﾞﾙﾌﾞ	1	
7	53651-12551		CAP,NIPPLE	ｷｬｯﾌﾟ	1	
8	216G1-02501		LABEL	ﾗﾍﾞﾙ	1	
-	516G0-62011		LABEL	ﾗﾍﾞﾙ	1	[ADE]
9	01183-08016		BOLT	ﾎﾞﾙﾄ	2	
10	237A1-02101		BRACKET,AIR-CLEANER	ﾌﾞﾗｹｯﾄ	1	A,B,C,D
-	237H1-02001		BRACKET,AIR-CLEANER	ﾌﾞﾗｹｯﾄ	1	E
-	237H1-02001		BRACKET,AIR-CLEANER	ﾌﾞﾗｹｯﾄ	1	A,C [PC]
11	54612-42021		SENSOR,635MM	ｾﾝｻ	1	[OKM]

FIG.4 AIR CLEANER (DIESEL)

(F5021040) エアークリーナ

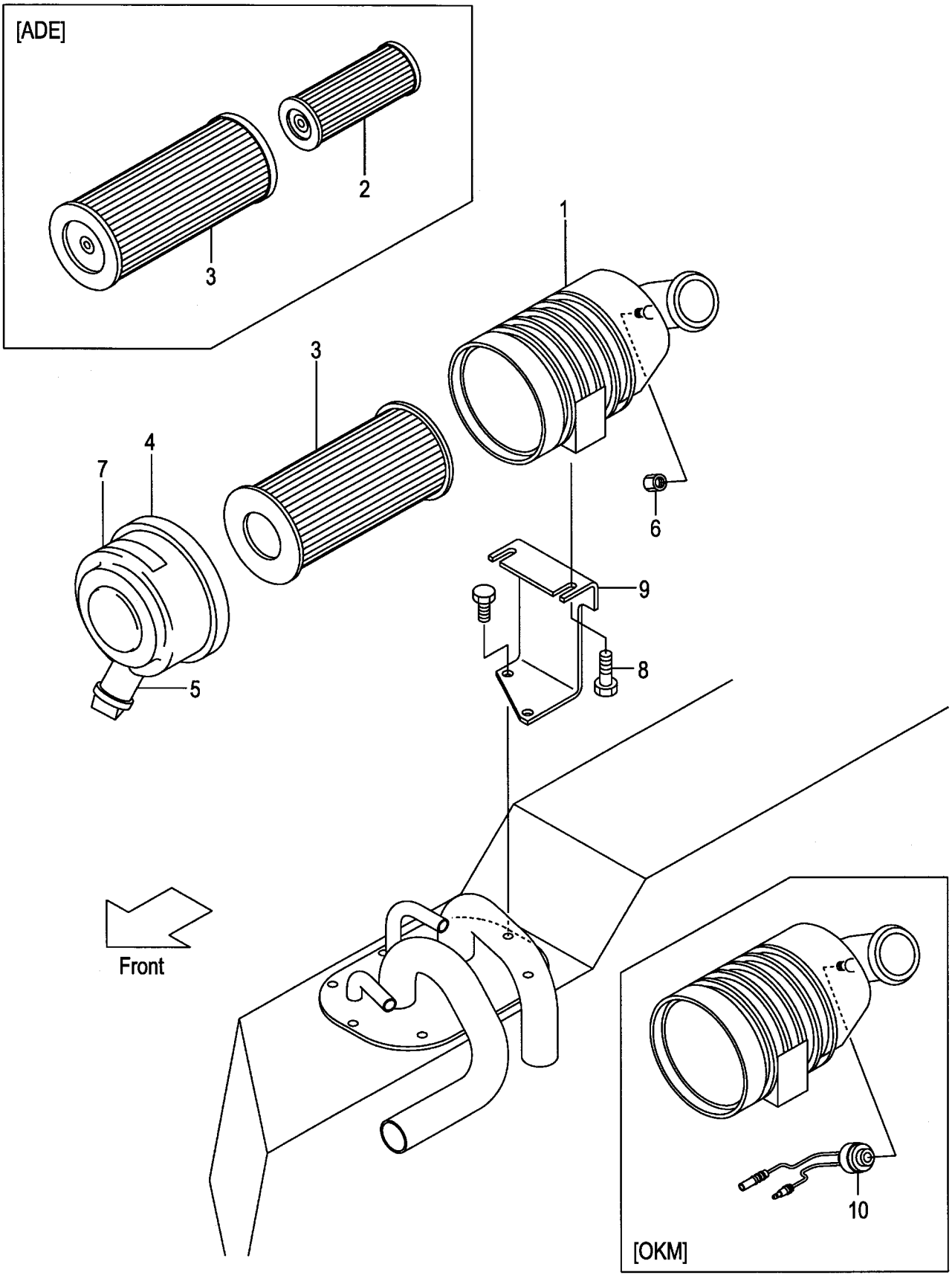

FIG.4

A:FD20C17 FD25C17:1-11024
B:FD20T17 FD25T17:1-11024

(F5021040)

Item No	Part No.	Mark	Description		Req'd	Remarks : Serial No.
A1	216G1-02051		CLEANER-ASSY,AIR	ｴｱｰｸﾘｰﾅｱｯｾﾝ	1	INC.1,3-7
-	516G0-60011		CLEANER-ASSY,AIR	ｴｱｰｸﾘｰﾅｱｯｾﾝ	1	[ADE] INC.1-7
1	216G1-02301		BODY	ﾎﾞﾃﾞｨ	1	
-	216G1-02071		BODY	ﾎﾞﾃﾞｨ	1	[ADE]
2	213T1-02021		ELEMENT,INNER	ｴﾚﾒﾝﾄ	1	[ADE]
3	256C1-08011		ELEMENT,OUTER	ｴﾚﾒﾝﾄ	1	
-	213T1-02011		ELEMENT,OUTER	ｴﾚﾒﾝﾄ	1	[ADE]
4	228F1-02211		COVER	ｶﾊﾞｰ	1	
5	256A1-08031		VALVE,VACUATOR	ﾊﾞﾙﾌﾞ	1	
6	53651-12551		CAP,NIPPLE	ｷｬｯﾌﾟ	1	
7	216G1-02311		LABEL	ﾗﾍﾞﾙ	1	
-	516G0-62001		LABEL	ﾗﾍﾞﾙ	1	[ADE]
8	01183-08016		BOLT	ﾎﾞﾙﾄ	2	
9	219M1-02101		BRACKET,AIR-CLEANER	ﾌﾞﾗｹｯﾄ	1	
-	219S1-02001		BRACKET,AIR-CLEANER	ﾌﾞﾗｹｯﾄ	1	A [PC]
10	522A1-10201		SENSOR,762MM	ｾﾝｻ	1	[OKM]

FIG.4A AIR CLEANER (DIESEL)

(F5021041) エアークリーナ

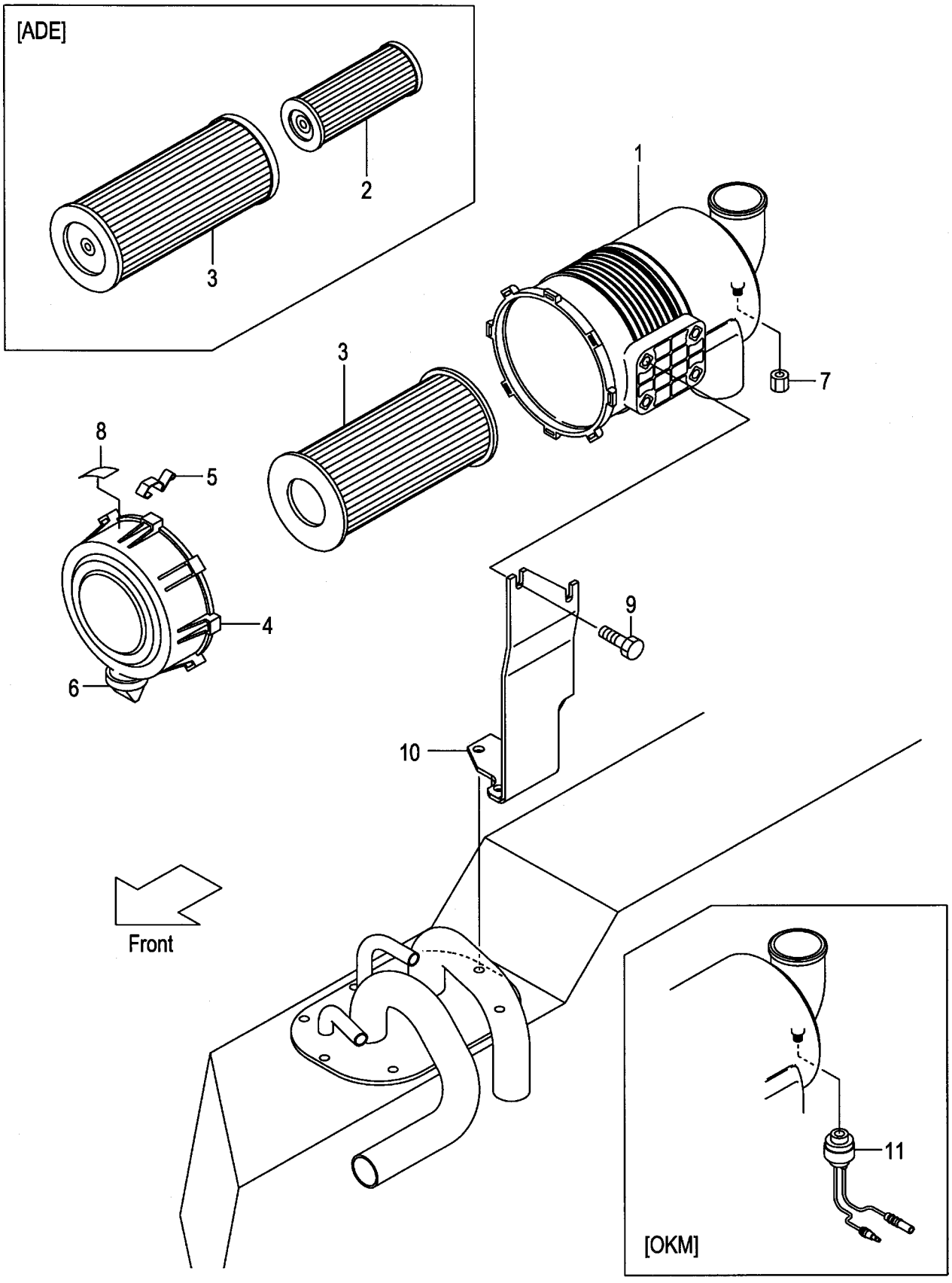

FIG.4A

(F5021041)

A:FD20C17 FD25C17:11025-
B:FD20T17 FD25T17:11025-

Item No	Part No.	Mark	Description		Req'd	Remarks : Serial No.
A1	216G1-02451		CLEANER-ASSY,AIR	ｴｱｰｸﾘｰﾅｱｯｾﾝ	1	INC.1,3-8
-	516G0-60101		CLEANER-ASSY,AIR	ｴｱｰｸﾘｰﾅｱｯｾﾝ	1	[ADE] INC.1-8
1	216G1-02481		BODY	ﾎﾞﾃﾞｨ	1	
2	213T1-02021		ELEMENT,INNER	ｴﾚﾒﾝﾄ	1	[ADE]
3	256C1-08011		ELEMENT,OUTER	ｴﾚﾒﾝﾄ	1	
-	213T1-02011		ELEMENT,OUTER	ｴﾚﾒﾝﾄ	1	[ADE]
4	216G1-02461		COVER	ｶﾊﾞｰ	1	
5	216G1-02471		LATCH	ﾗｯﾁ	3	
6	216G1-02491		VALVE,VACUATOR	ﾊﾞﾙﾌﾞ	1	
7	53651-12551		CAP,NIPPLE	ｷｬｯﾌﾟ	1	
8	216G1-02501		LABEL	ﾗﾍﾞﾙ	1	
-	516G0-62011		LABEL	ﾗﾍﾞﾙ	1	[ADE]
9	01183-08016		BOLT	ﾎﾞﾙﾄ	2	
10	238G1-02101		BRACKET,AIR-CLEANER	ﾌﾞﾗｹｯﾄ	1	
11	522A1-10201		SENSOR,762MM	ｾﾝｻ	1	[OKM]

FIG.5 AIR CLEANER (DIESEL)

(F5021050) エアークリーナ

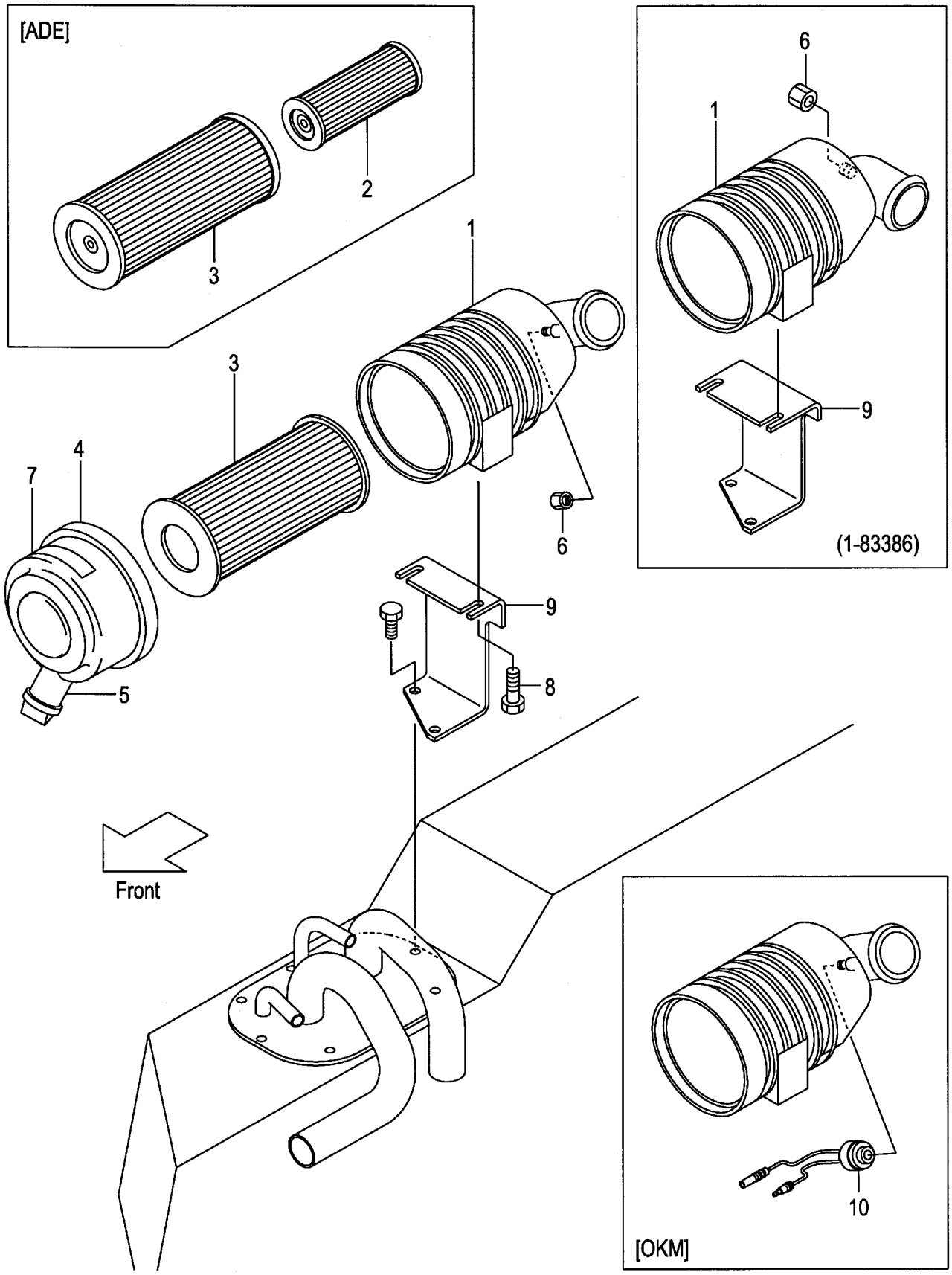

A:FD20C6 FD25C6:1-85956
B:FD20T6 FD25T6:1-85956
C:FD20W6 FD25W6:1-85956

FIG.5
(F5021050)

Item No	Part No.	Mark	Description		Req'd	Remarks : Serial No.
A1	234A1-00101		CLEANER-ASSY,AIR	ｴｱｰｸﾘｰﾅｱｯｾﾝ	1	1-83386 INC.1,3-7
-	216G1-02051		CLEANER-ASSY,AIR	ｴｱｰｸﾘｰﾅｱｯｾﾝ	1	83387- INC.1,3-7
-	534A0-60011		CLEANER-ASSY,AIR	ｴｱｰｸﾘｰﾅｱｯｾﾝ	1	1-83386 [ADE] INC.1-7
-	516G0-60011		CLEANER-ASSY,AIR	ｴｱｰｸﾘｰﾅｱｯｾﾝ	1	83387- [ADE] INC.1-7
1	234A1-00111		BODY	ﾎﾞﾃﾞｨ	1	1-83386
-	216G1-02301		BODY	ﾎﾞﾃﾞｨ	1	83387-
-	216G1-02071		BODY	ﾎﾞﾃﾞｨ	1	83387- [ADE]
2	534A0-62011		ELEMENT,INNER	ｴﾚﾒﾝﾄ	1	1-83386 [ADE]
-	213T1-02021		ELEMENT,INNER	ｴﾚﾒﾝﾄ	1	83387- [ADE]
3	256G1-08011		ELEMENT,OUTER	ｴﾚﾒﾝﾄ	1	1-83386
-	256C1-08011		ELEMENT,OUTER	ｴﾚﾒﾝﾄ	1	83387-
-	534A0-62001		ELEMENT,OUTER	ｴﾚﾒﾝﾄ	1	1-83386 [ADE]
-	213T1-02011		ELEMENT,OUTER	ｴﾚﾒﾝﾄ	1	83387- [ADE]
4	256G1-08021		COVER	ｶﾊﾞｰ	1	1-83386
-	228F1-02211		COVER	ｶﾊﾞｰ	1	83387-
5	256A1-08031		VALVE,VACUATOR	ﾊﾞﾙﾌﾞ	1	
6	53651-12551		CAP,NIPPLE	ｷｬｯﾌﾟ	1	
7	234A1-00121		LABEL	ﾗﾍﾞﾙ	1	1-83386
-	216G1-02311		LABEL	ﾗﾍﾞﾙ	1	83387-
-	516G0-62001		LABEL	ﾗﾍﾞﾙ	1	[ADE]
8	01183-08016		BOLT	ﾎﾞﾙﾄ	2	
9	239A1-02511		BRACKET,AIR-CLEANER	ﾌﾞﾗｹｯﾄ	1	A,B:1-83386
-	219M1-02101		BRACKET,AIR-CLEANER	ﾌﾞﾗｹｯﾄ	1	A,B:83387-
-	239H1-02001		BRACKET,AIR-CLEANER	ﾌﾞﾗｹｯﾄ	1	C:1-83386
-	219S1-02001		BRACKET,AIR-CLEANER	ﾌﾞﾗｹｯﾄ	1	C:83387-
-	239H1-02001		BRACKET,AIR-CLEANER	ﾌﾞﾗｹｯﾄ	1	A:1-83386 [PC]
-	219S1-02001		BRACKET,AIR-CLEANER	ﾌﾞﾗｹｯﾄ	1	A:83387- [PC]
10	522A1-10201		SENSOR,762MM	ｾﾝｻ	1	[OKM]

FIG.5A AIR CLEANER (DIESEL)

(F5021051) エアークリーナ

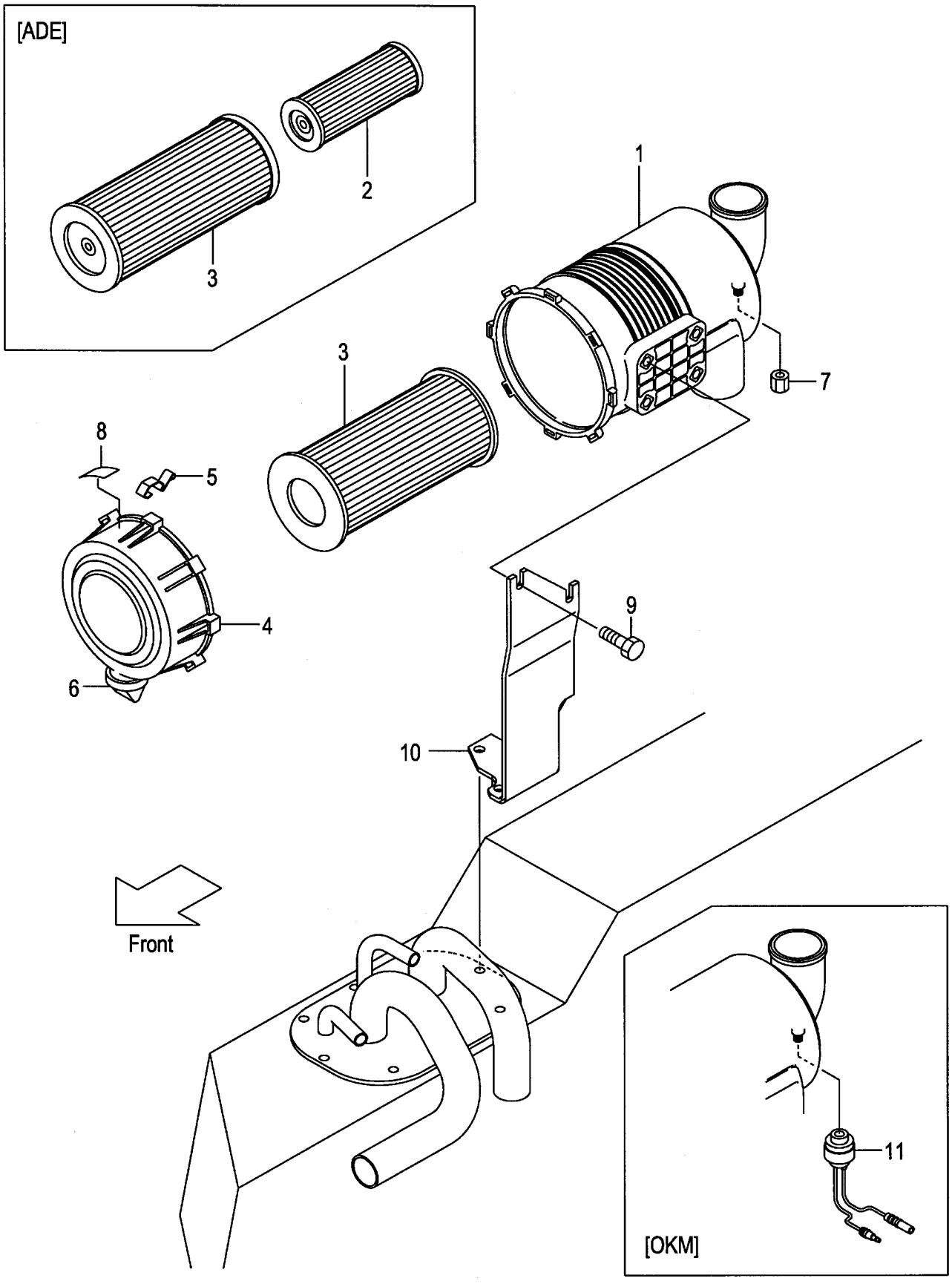

A:FD20C6 FD25C6:85957-
B:FD20T6 FD25T6:85957-
C:FD20W6 FD25W6:85957-

FIG.5A
(F5021051)

Item No	Part No.	Mark	Description		Req'd	Remarks : Serial No.
A1	216G1-02451		CLEANER-ASSY,AIR	ｴｱｰｸﾘｰﾅｱｯｾﾝ	1	INC.1,3-8
-	516G0-60101		CLEANER-ASSY,AIR	ｴｱｰｸﾘｰﾅｱｯｾﾝ	1	[ADE] INC.1-8
1	216G1-02481		BODY	ﾎﾞﾃﾞｨ	1	
2	213T1-02021		ELEMENT,INNER	ｴﾚﾒﾝﾄ	1	[ADE]
3	256C1-08011		ELEMENT,OUTER	ｴﾚﾒﾝﾄ	1	
-	213T1-02011		ELEMENT,OUTER	ｴﾚﾒﾝﾄ	1	[ADE]
4	216G1-02461		COVER	ｶﾊﾞｰ	1	
5	216G1-02471		LATCH	ﾗｯﾁ	3	
6	216G1-02491		VALVE,VACUATOR	ﾊﾞﾙﾌﾞ	1	
7	53651-12551		CAP,NIPPLE	ｷｬｯﾌﾟ	1	
8	216G1-02501		LABEL	ﾗﾍﾞﾙ	1	
-	516G0-62011		LABEL	ﾗﾍﾞﾙ	1	[ADE]
9	01183-08016		BOLT	ﾎﾞﾙﾄ	2	
10	238G1-02101		BRACKET,AIR-CLEANER	ﾌﾞﾗｹｯﾄ	1	
11	522A1-10201		SENSOR,762MM	ｾﾝｻ	1	[OKM]

FIG.6 AIR DUCT (GASOLINE)

(F5021060) エアーダクト

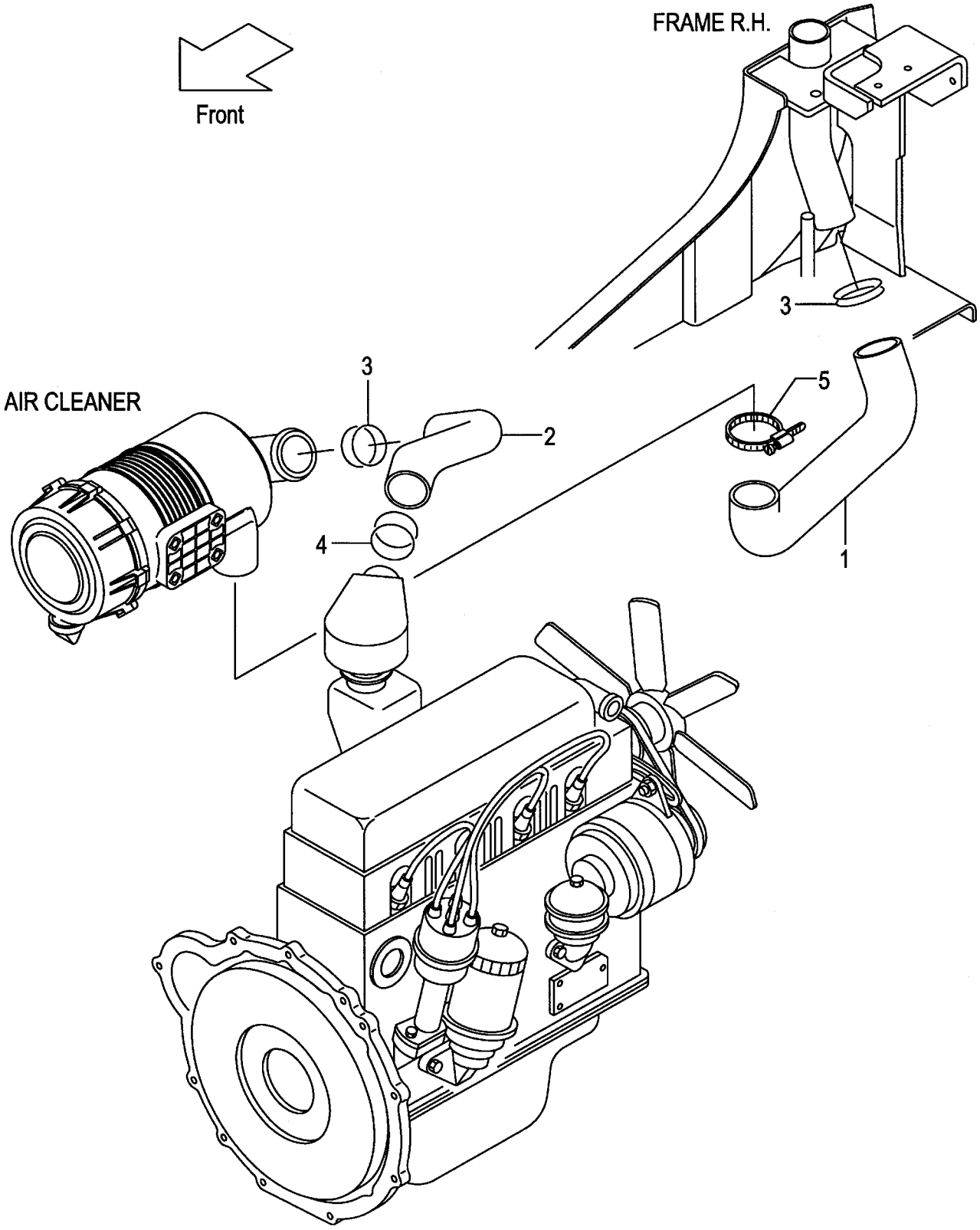

FIG.6

(F5021060)

A:FG20C17 FG20T17 FG25C17 FG25T17
B:FG20C6 FG20T6 FG25C6 FG25T6 FG20W6 FG25W6

Item No	Part No.	Mark	Description		Req'd	Remarks : Serial No.
1	218G1-02101		HOSE,AIR-DUCT	ﾎｰｽ	1	
2	233A1-02001		HOSE,AIR-INTAKE	ﾎｰｽ	1	
3	04911-00060		CLIP	ｸﾘｯﾌﾟ	2	
4	04911-00065		CLIP	ｸﾘｯﾌﾟ	1	
5	224W4-52071		BAND	ﾊﾞﾝﾄﾞ	1	

FIG.7 AIR DUCT (DIESEL)

(F5021070) エアーダクト

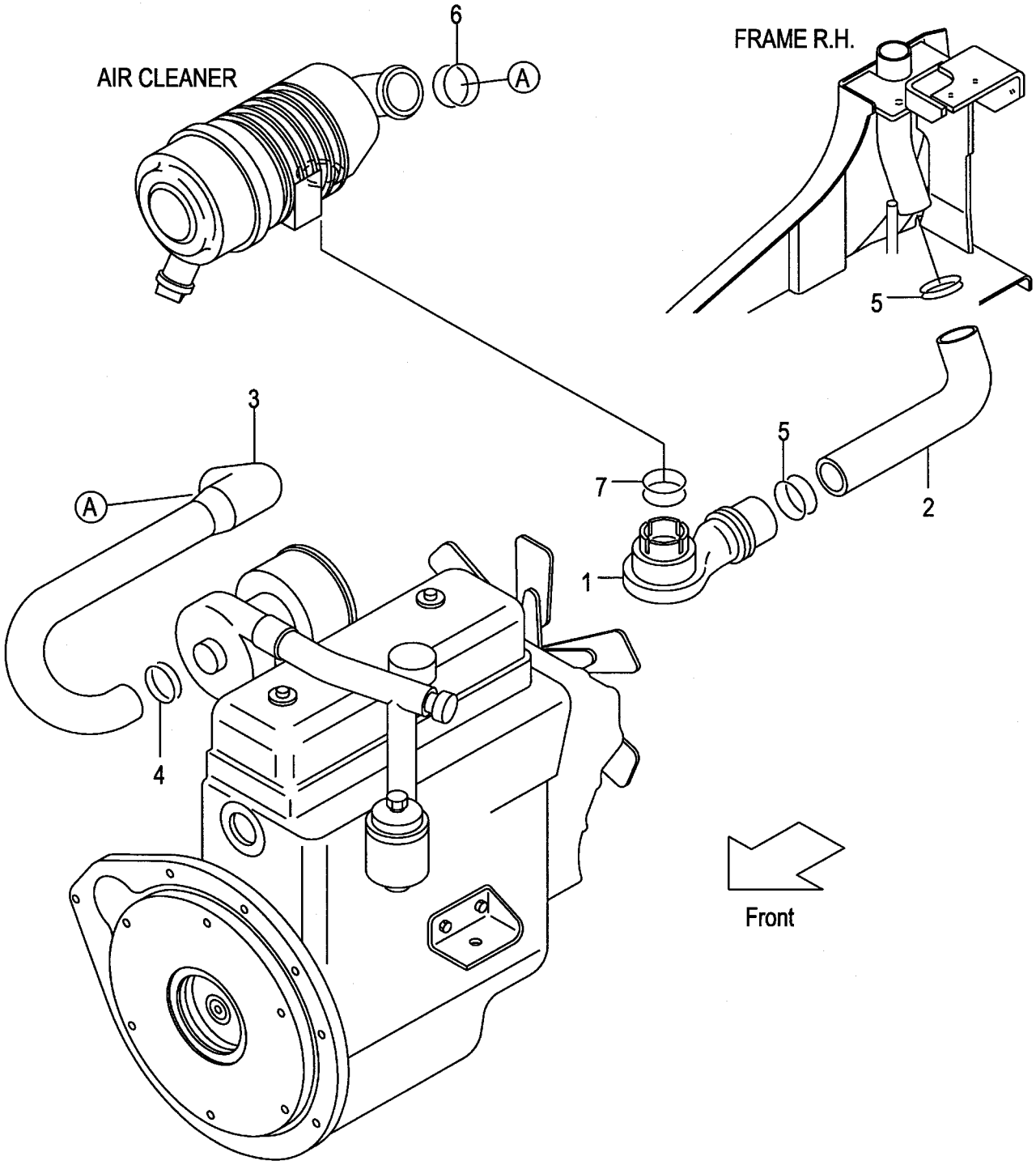

FIG.7

(F5021070)

A:FD20C17 FD20T17 FD25C17 FD25T17

Item No	Part No.	Mark	Description		Req'd	Remarks : Serial No.
1	216G1-02031		INTAKE,AIR	ｲﾝﾃｰｸ	1	
2	216G1-02021		HOSE,AIR-DUCT	ﾎｰｽ	1	
3	220U1-02001		HOSE,AIR-INTAKE	ﾎｰｽ	1	
4	04911-00050		CLIP	ｸﾘｯﾌﾟ	1	
5	04911-00060		CLIP	ｸﾘｯﾌﾟ	2	
6	04911-00065		CLIP	ｸﾘｯﾌﾟ	1	
7	04911-00055		CLIP	ｸﾘｯﾌﾟ	1	

FIG.8 AIR DUCT (DIESEL)

(F5021080) エアーダクト

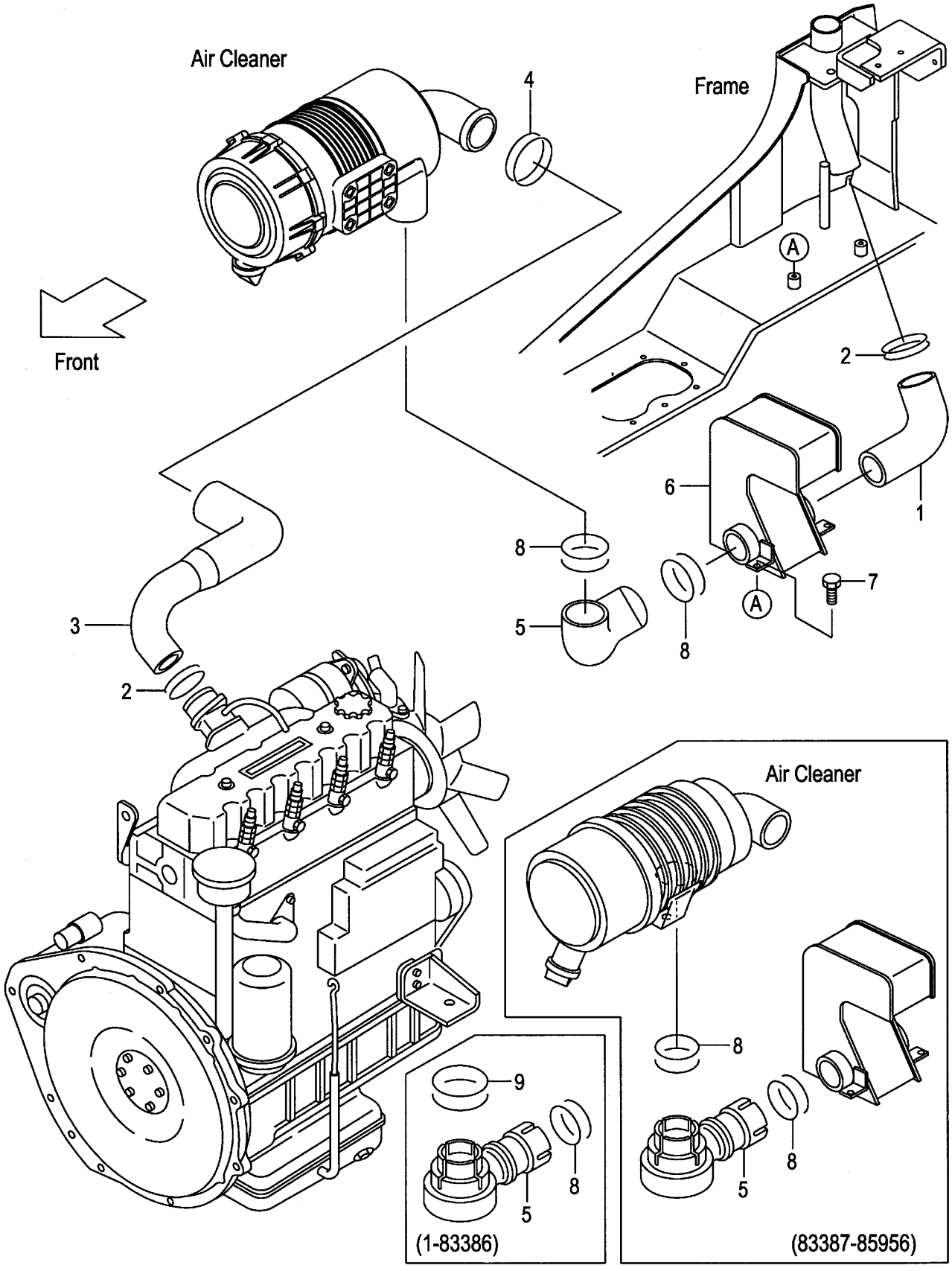

FIG.8

(F5021080)

A:FD20C6 FD20T6 FD25C6 FD25T6 FD20W6 FD25W6

Item No	Part No.	Mark	Description		Req'd	Remarks : Serial No.
1	217M1-02031		HOSE,AIR-DUCT	ﾎｰｽ	1	
2	04911-00060		CLIP	ｸﾘｯﾌﾟ	2	
3	232A1-02001		HOSE,AIR-INTAKE	ﾎｰｽ	1	1-83386
-	238L1-02001		HOSE,AIR-INTAKE	ﾎｰｽ	1	83387-
4	04911-00075		CLIP	ｸﾘｯﾌﾟ	1	1-83386
-	04911-00065		CLIP	ｸﾘｯﾌﾟ	1	83387-
5	234A1-02001		INTAKE,AIR	ｲﾝﾃｰｸ	1	1-83386
-	217M1-02011		INTAKE,AIR	ｲﾝﾃｰｸ	1	83387-85956
-	238G1-02111		INTAKE,AIR	ｲﾝﾃｰｸ	1	85957-
6	217M1-02402		RESONATOR	ﾚｿﾞﾈｰﾀ	1	
7	01185-08016		BOLT	ﾎﾞﾙﾄ	2	
8	04911-00055		CLIP	ｸﾘｯﾌﾟ	1	1-83386
-	04911-00055		CLIP	ｸﾘｯﾌﾟ	2	83387-85956
-	04911-00060		CLIP	ｸﾘｯﾌﾟ	2	85957-
9	04911-00070		CLIP	ｸﾘｯﾌﾟ	1	1-83386

FIG.9 PRE CLEANER [CAKB]

(F5021090) ﾌﾟﾚｸﾘｰﾅ

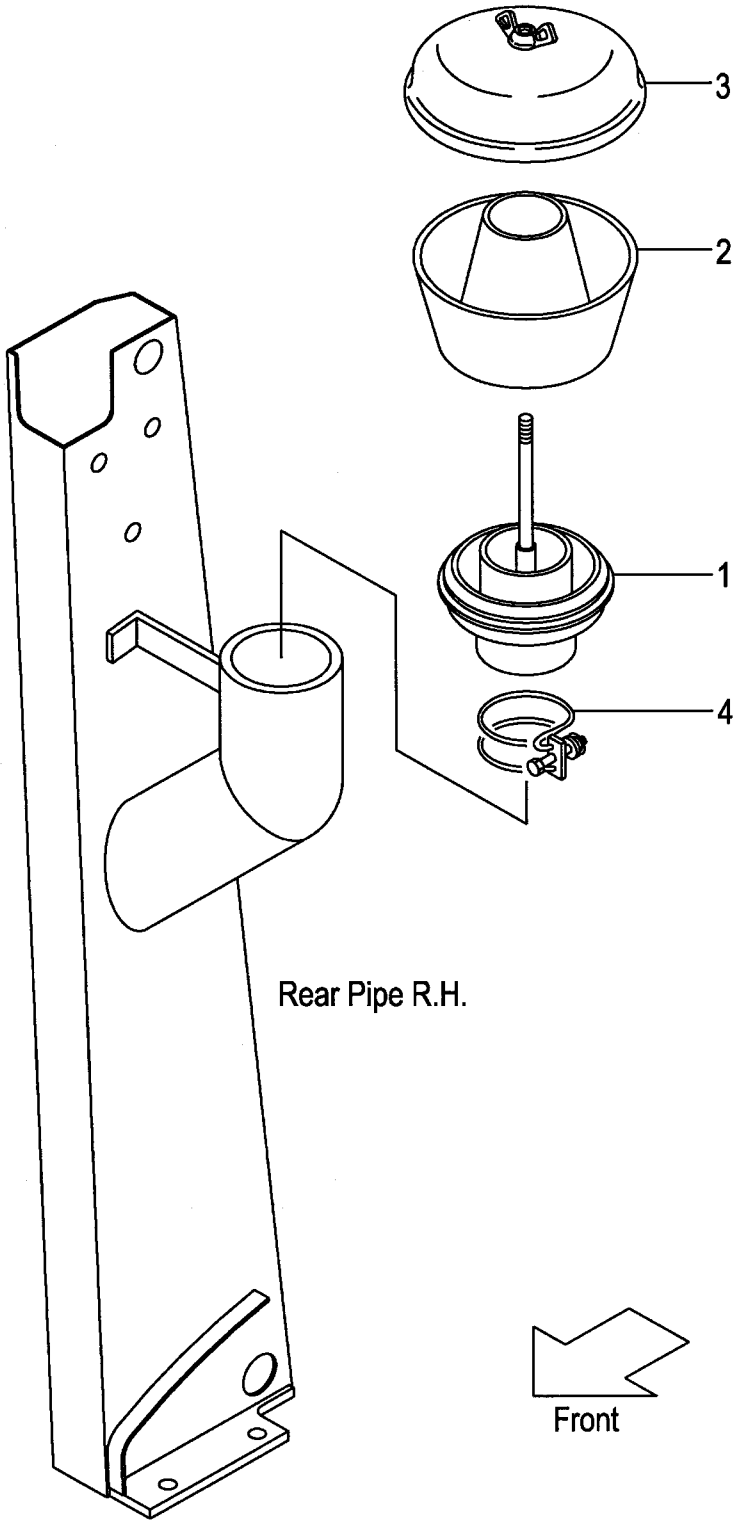

FIG.9

A:FG20C17 FG20T17 FG25C17 FG25T17 C:FD20C17 FD20T17 FD25C17 FD25T17 (F5021090)
B:FG20C6 FG20T6 FG25C6 FG25T6 FG20W6 FG25W6 D:FD20C6 FD20T6 FD25C6 FD25T6 FD20W6 FD25W6

Item No	Part No.	Mark	Description		Req'd	Remarks : Serial No.
A1	522B0-92021		CLEANER-ASSY,PRE	ﾌﾟﾚｸﾘｰﾅｱｯｾﾝ	1	[CAKB] INC.1-3
1	522B0-92031		SLEEVE	ｽﾘｰﾌﾞ	1	[CAKB]
2	522B0-92041		BODY	ﾎﾞﾃﾞｨ	1	[CAKB]
3	522B0-92051		COVER	ｶﾊﾞｰ	1	[CAKB]
4	04911-00090		CLIP	ｸﾘｯﾌﾟ	1	[CAKB]

FIG.10 COOLING UNIT (GASOLINE)

(F5022110) クーリング゛ユニット

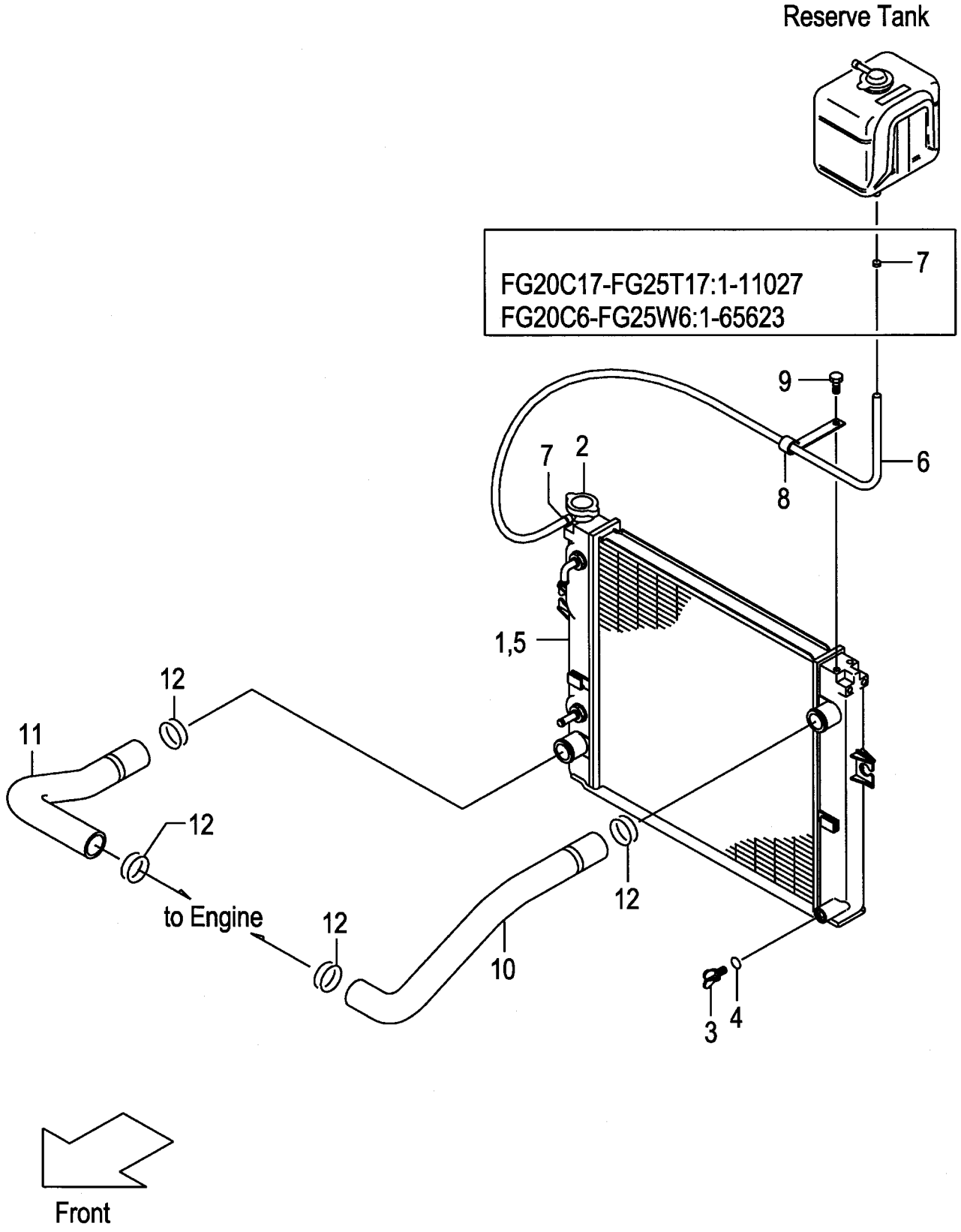

A:FG20C17 FG25C17 D:FG20T6 FG25T6
B:FG20T17 FG25T17 E:FG20W6 FG25W6
C:FG20C6 FG25C6

FIG.10
(F5022110)

Item No	Part No.	Mark	Description		Req'd	Remarks : Serial No.
A1	237A2-10101		RADIATOR-ASSY	ﾗｼﾞｴｰﾀｱｯｾﾝ	1	A:1-11027 C:1-65623 INC.1-7
-	237A2-10102		RADIATOR-ASSY	ﾗｼﾞｴｰﾀｱｯｾﾝ	1	A:11028- C:65624- INC.1-7
-	236B2-10101		RADIATOR-ASSY	ﾗｼﾞｴｰﾀｱｯｾﾝ	1	B:1-11027 INC.1-7
-	236B2-10102		RADIATOR-ASSY	ﾗｼﾞｴｰﾀｱｯｾﾝ	1	B:11028- INC.1-7
-	237B2-10101		RADIATOR-ASSY	ﾗｼﾞｴｰﾀｱｯｾﾝ	1	D:1-65450 INC.1-7
-	236L2-10101		RADIATOR-ASSY	ﾗｼﾞｴｰﾀｱｯｾﾝ	1	D:65451-65623 INC.1-7
-	236L2-10102		RADIATOR-ASSY	ﾗｼﾞｴｰﾀｱｯｾﾝ	1	D:65624- INC.1-7
-	237H2-10101		RADIATOR-ASSY	ﾗｼﾞｴｰﾀｱｯｾﾝ	1	E:1-65623 INC.1-7
-	237H2-10102		RADIATOR-ASSY	ﾗｼﾞｴｰﾀｱｯｾﾝ	1	E:65624- INC.1-7
-	537A6-60301		RADIATOR-ASSY	ﾗｼﾞｴｰﾀｱｯｾﾝ	1	A:1-11027 C,E:1-65623 [RADPF][HCS][EXK] INC.1-7
-	537A6-60302		RADIATOR-ASSY	ﾗｼﾞｴｰﾀｱｯｾﾝ	1	A:11028- C,E:65624- [RADPF][HCS][EXK] INC.1-7
-	536B6-60301		RADIATOR-ASSY	ﾗｼﾞｴｰﾀｱｯｾﾝ	1	B:1-11027 D:1-65623 [RADPF][HCS][EXK] INC.1-7
-	536B6-60302		RADIATOR-ASSY	ﾗｼﾞｴｰﾀｱｯｾﾝ	1	B:11028- D:65624- [RADPF][HCS][EXK] INC.1-7
1	NO PART NO.	#	RADIATOR	ﾗｼﾞｴｰﾀ	1	
2	222A2-10211		CAP	ｷｬｯﾌﾟ	1	
3	234A2-12201		COCK	ｺｯｸ	1	
4	234A2-12211		O-RING	Oﾘﾝｸﾞ	1	
5	NO PART NO.	#	NUT	ﾅｯﾄ	3	A,B,C
-	NO PART NO.	#	NUT	ﾅｯﾄ	4	D,E
-	NO PART NO.	#	NUT	ﾅｯﾄ	4	[RADPF][HCS][EXK]
6	218M2-12301		HOSE	ﾎｰｽ	1	
7	23772-12071		CLIP	ｸﾘｯﾌﾟ	2	A,B:1-11027 C,D,E:1-65623
-	23772-12071		CLIP	ｸﾘｯﾌﾟ	1	A,B:11028- C,D,E:65624-
8	214A2-42331		CLIP	ｸﾘｯﾌﾟ	1	
9	01185-08016		BOLT	ﾎﾞﾙﾄ	1	
10	237A2-12002		HOSE,UPPER	ﾎｰｽ	1	
11	237A2-12011		HOSE,LOWER	ﾎｰｽ	1	
12	04911-00044		CLIP	ｸﾘｯﾌﾟ	4	

FIG.11 COOLING UNIT (DIESEL:CLUTCH)

(F5022120) クーリング゛ユニット

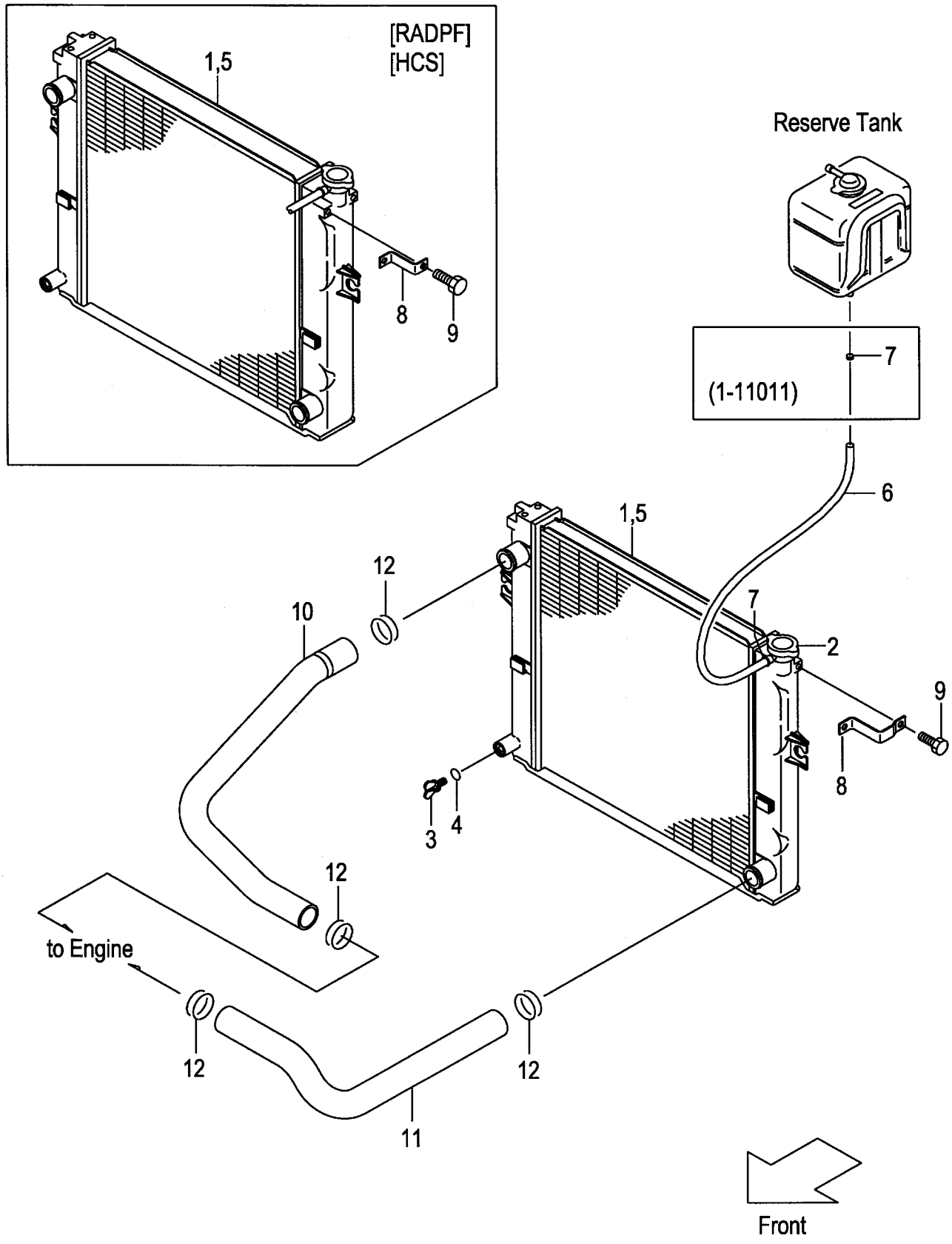

FIG.11
(F5022120)

A:FD20C17 FD25C17

Item No	Part No.	Mark	Description		Req'd	Remarks : Serial No.
A1	239A2-10101		RADIATOR-ASSY	ﾗｼﾞｴｰﾀｱｯｾﾝ	1	1-11011 INC.1-7
-	239A2-10102		RADIATOR-ASSY	ﾗｼﾞｴｰﾀｱｯｾﾝ	1	11012- INC.1-7
-	539A6-60301		RADIATOR-ASSY	ﾗｼﾞｴｰﾀｱｯｾﾝ	1	1-11011 [RADPF][HCS] INC.1-7
-	539A6-60302		RADIATOR-ASSY	ﾗｼﾞｴｰﾀｱｯｾﾝ	1	11012- [RADPF][HCS] INC.1-7
1	NO PART NO.	#	RADIATOR	ﾗｼﾞｴｰﾀ	1	
2	222A2-10211		CAP	ｷｬｯﾌﾟ	1	
3	234A2-12201		COCK	ｺｯｸ	1	
4	234A2-12211		O-RING	Oﾘﾝｸﾞ	1	
5	NO PART NO.	#	NUT	ﾅｯﾄ	3	
-	NO PART NO.	#	NUT	ﾅｯﾄ	4	[RADPF][HCS]
6	219M2-12301		HOSE	ﾎｰｽ	1	
7	23772-12071		CLIP	ｸﾘｯﾌﾟ	2	1-11011
-	23772-12071		CLIP	ｸﾘｯﾌﾟ	1	11012-
8	239A2-12141		BRACKET	ﾌﾞﾗｹｯﾄ	1	
-	239B2-12141		BRACKET	ﾌﾞﾗｹｯﾄ	1	[RADPF][HCS]
9	01185-08016		BOLT	ﾎﾞﾙﾄ	1	
10	238A2-12001		HOSE,UPPER	ﾎｰｽ	1	
11	238A2-12011		HOSE,LOWER	ﾎｰｽ	1	
12	04911-00044		CLIP	ｸﾘｯﾌﾟ	4	

FIG.12 COOLING UNIT (DIESEL:CLUTCH)

(F5022130) クーリング゛ユニット

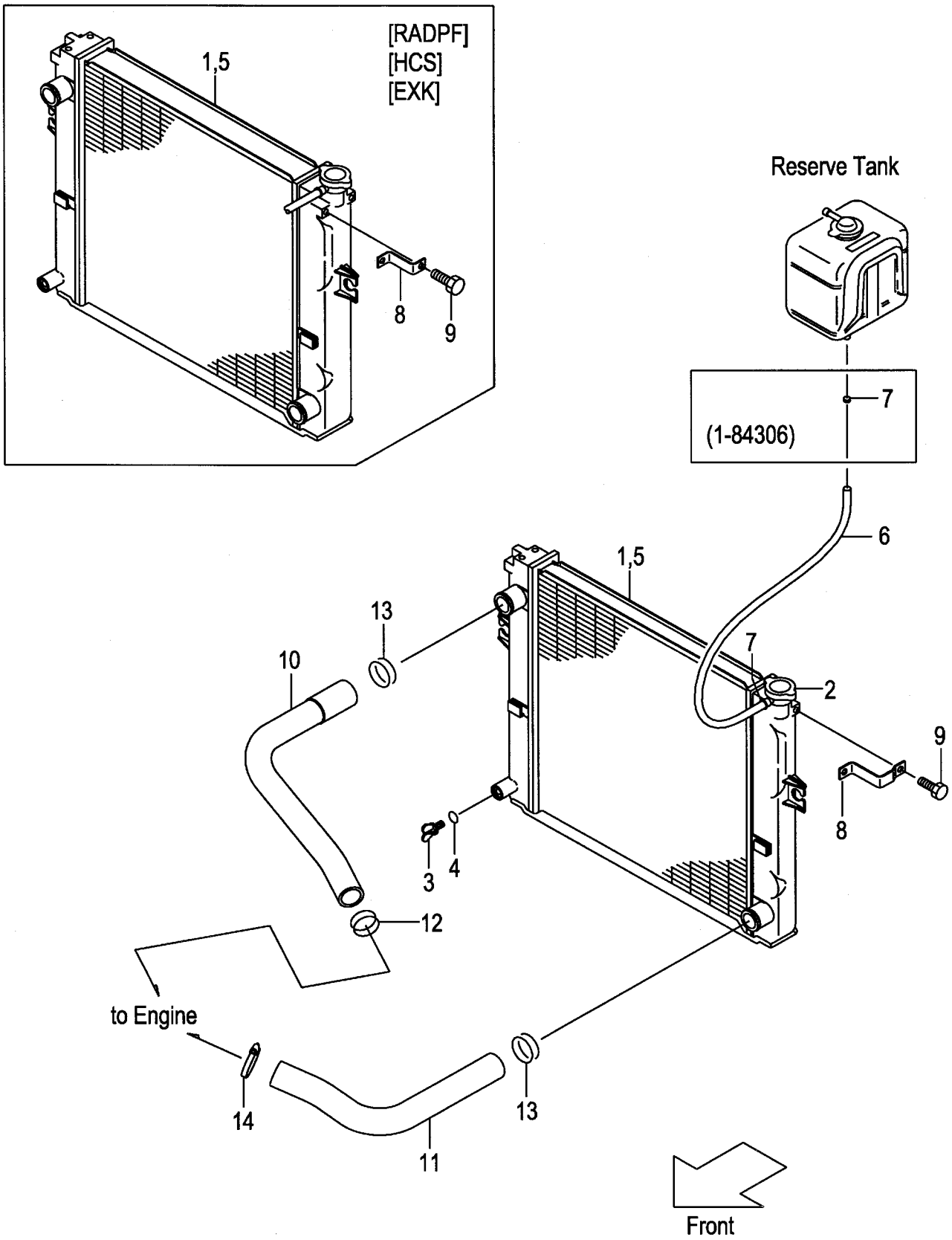

FIG.12

(F5022130)

A:FD20C6 FD25C6

Item No	Part No.	Mark	Description		Req'd	Remarks : Serial No.
A1	239A2-10101		RADIATOR-ASSY	ﾗｼﾞｴｰﾀｱｯｾﾝ	1	1-84306 INC.1-7
-	239A2-10102		RADIATOR-ASSY	ﾗｼﾞｴｰﾀｱｯｾﾝ	1	84307- INC.1-7
-	539A6-60301		RADIATOR-ASSY	ﾗｼﾞｴｰﾀｱｯｾﾝ	1	1-84306 [RADPF][HCS][EXK] INC.1-7
-	539A6-60302		RADIATOR-ASSY	ﾗｼﾞｴｰﾀｱｯｾﾝ	1	84307- [RADPF][HCS][EXK] INC.1-7
1	NO PART NO.	#	RADIATOR	ﾗｼﾞｴｰﾀ	1	
2	222A2-10211		CAP	ｷｬｯﾌﾟ	1	
3	234A2-12201		COCK	ｺｯｸ	1	
4	234A2-12211		O-RING	Oﾘﾝｸﾞ	1	
5	NO PART NO.	#	NUT	ﾅｯﾄ	3	
-	NO PART NO.	#	NUT	ﾅｯﾄ	4	[RADPF][HCS][EXK]
6	219M2-12301		HOSE	ﾎｰｽ	1	
7	23772-12071		CLIP	ｸﾘｯﾌﾟ	2	1-84306
-	23772-12071		CLIP	ｸﾘｯﾌﾟ	1	84307-
8	239A2-12141		BRACKET	ﾌﾞﾗｹｯﾄ	1	
-	239B2-12141		BRACKET	ﾌﾞﾗｹｯﾄ	1	[RADPF][HCS][EXK]
9	01185-08016		BOLT	ﾎﾞﾙﾄ	1	
10	238F2-12001		HOSE,UPPER	ﾎｰｽ	1	
11	238F2-12011		HOSE,LOWER	ﾎｰｽ	1	
12	04911-00040		CLIP	ｸﾘｯﾌﾟ	1	
13	04911-00044		CLIP	ｸﾘｯﾌﾟ	2	
14	217M2-12221		CLAMP,HOSE	ｸﾗﾝﾌﾟ	1	

FIG.13 COOLING UNIT (DIESEL:TOR-CON)

(F5022140) クーリング゛ユニット

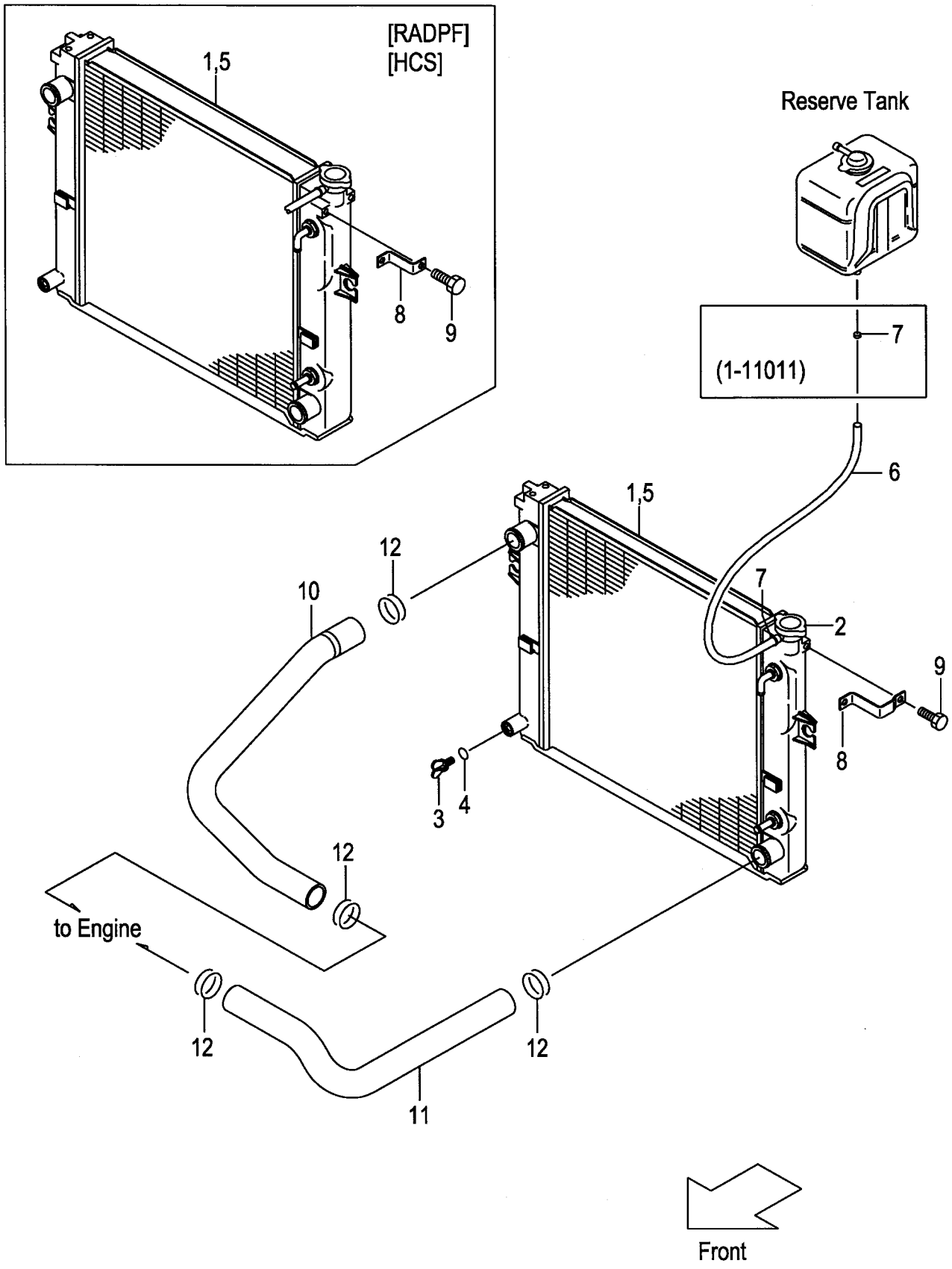

FIG.13
(F5022140)

A:FD20T17 FD25T17

Item No	Part No.	Mark	Description		Req'd	Remarks : Serial No.
A1	238B2-10101		RADIATOR-ASSY	ﾗｼﾞｴｰﾀｱｯｾﾝ	1	1-11011 INC.1-7
-	238B2-10102		RADIATOR-ASSY	ﾗｼﾞｴｰﾀｱｯｾﾝ	1	11012- INC.1-7
-	538B6-60301		RADIATOR-ASSY	ﾗｼﾞｴｰﾀｱｯｾﾝ	1	1-11011 [RADPF][HCS] INC.1-7
-	538B6-60302		RADIATOR-ASSY	ﾗｼﾞｴｰﾀｱｯｾﾝ	1	11012- [RADPF][HCS] INC.1-7
1	NO PART NO.	#	RADIATOR	ﾗｼﾞｴｰﾀ	1	
2	222A2-10211		CAP	ｷｬｯﾌﾟ	1	
3	234A2-12201		COCK	ｺｯｸ	1	
4	234A2-12211		O-RING	Oﾘﾝｸﾞ	1	
5	NO PART NO.	#	NUT	ﾅｯﾄ	3	
-	NO PART NO.	#	NUT	ﾅｯﾄ	4	[RADPF][HCS]
6	219M2-12301		HOSE	ﾎｰｽ	1	
7	23772-12071		CLIP	ｸﾘｯﾌﾟ	2	1-11011
-	23772-12071		CLIP	ｸﾘｯﾌﾟ	1	11012-
8	239A2-12141		BRACKET	ﾌﾞﾗｹｯﾄ	1	
-	239B2-12141		BRACKET	ﾌﾞﾗｹｯﾄ	1	[RADPF][HCS]
9	01185-08016		BOLT	ﾎﾞﾙﾄ	1	
10	238A2-12001		HOSE,UPPER	ﾎｰｽ	1	
11	238A2-12011		HOSE,LOWER	ﾎｰｽ	1	
12	04911-00044		CLIP	ｸﾘｯﾌﾟ	4	

FIG.14 COOLING UNIT (DIESEL:TOR-CON & OIL CLUTCH)

(F5022150) クーリング゛ユニット

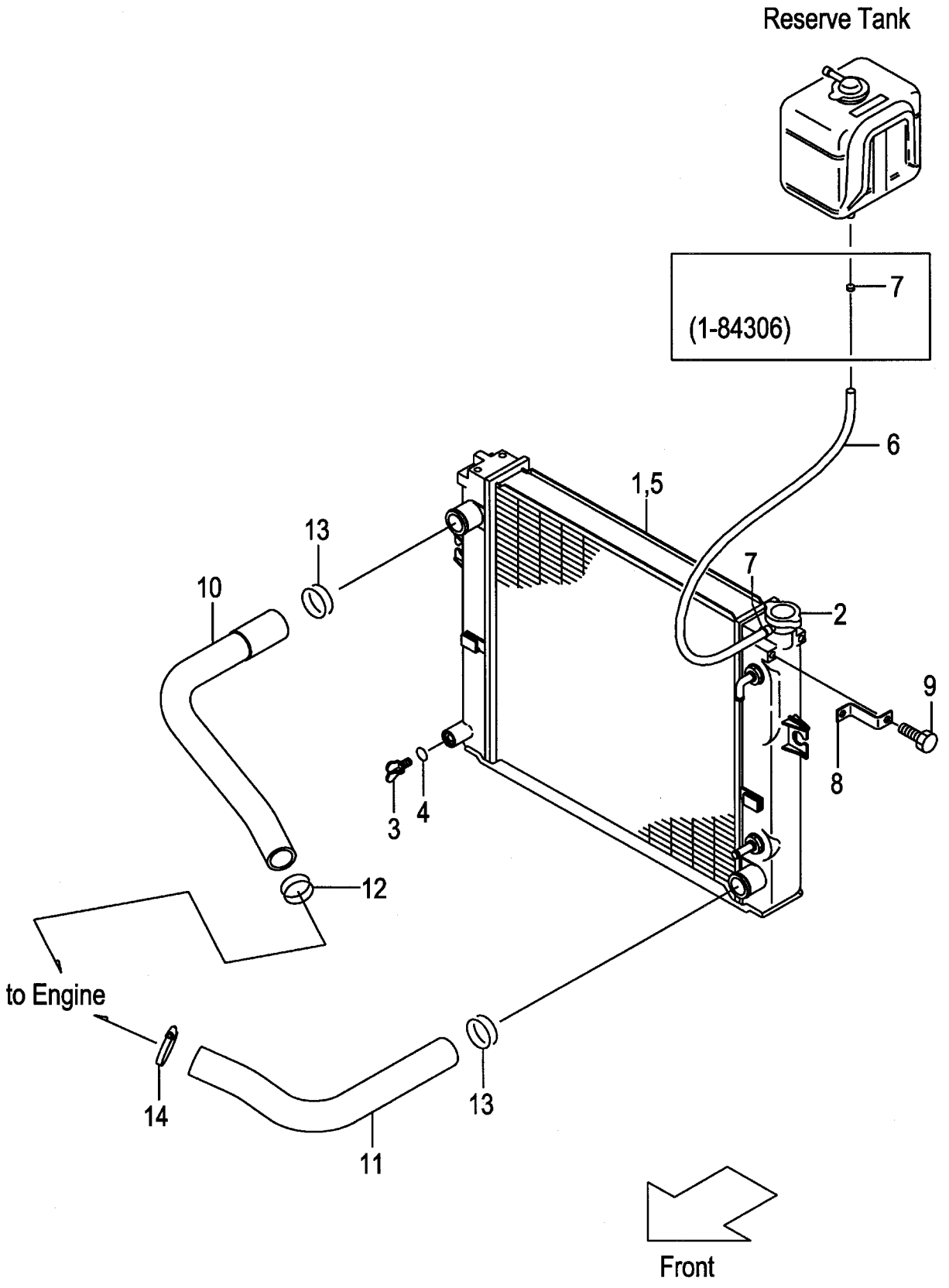

A:FD20T6 FD25T6
B:FD20W6 FD25W6

FIG.14
(F5022150)

Item No	Part No.	Mark	Description		Req'd	Remarks : Serial No.
A1	239B2-10101		RADIATOR-ASSY	ﾗｼﾞｴｰﾀｱｯｾﾝ	1	A:1-83955 INC.1-7
-	238G2-10101		RADIATOR-ASSY	ﾗｼﾞｴｰﾀｱｯｾﾝ	1	A:83956-84306 INC.1-7
-	238G2-10102		RADIATOR-ASSY	ﾗｼﾞｴｰﾀｱｯｾﾝ	1	A:84307- INC.1-7
-	239H2-10101		RADIATOR-ASSY	ﾗｼﾞｴｰﾀｱｯｾﾝ	1	B:1-84306 INC.1-7
-	239H2-10102		RADIATOR-ASSY	ﾗｼﾞｴｰﾀｱｯｾﾝ	1	B:84307- INC.1-7
-	538B6-60301		RADIATOR-ASSY	ﾗｼﾞｴｰﾀｱｯｾﾝ	1	A:1-84306 [RADPF][HCS][EXK] INC.1-7
-	538B6-60302		RADIATOR-ASSY	ﾗｼﾞｴｰﾀｱｯｾﾝ	1	A:84307- [RADPF][HCS][EXK] INC.1-7
-	539A6-60301		RADIATOR-ASSY	ﾗｼﾞｴｰﾀｱｯｾﾝ	1	B:1-84306 [RADPF][HCS][EXK] INC.1-7
-	539A6-60302		RADIATOR-ASSY	ﾗｼﾞｴｰﾀｱｯｾﾝ	1	B:84307- [RADPF][HCS][EXK] INC.1-7
1	NO PART NO.	#	RADIATOR	ﾗｼﾞｴｰﾀ	1	
2	222A2-10211		CAP	ｷｬｯﾌﾟ	1	
3	234A2-12201		COCK	ｺｯｸ	1	
4	234A2-12211		O-RING	Oﾘﾝｸﾞ	1	
5	NO PART NO.	#	NUT	ﾅｯﾄ	4	
6	219M2-12301		HOSE	ﾎｰｽ	1	
7	23772-12071		CLIP	ｸﾘｯﾌﾟ	2	1-84306
-	23772-12071		CLIP	ｸﾘｯﾌﾟ	1	84307-
8	239B2-12141		BRACKET	ﾌﾞﾗｹｯﾄ	1	
9	01185-08016		BOLT	ﾎﾞﾙﾄ	1	
10	238F2-12001		HOSE,UPPER	ﾎｰｽ	1	
11	238F2-12011		HOSE,LOWER	ﾎｰｽ	1	
12	04911-00040		CLIP	ｸﾘｯﾌﾟ	1	
13	04911-00044		CLIP	ｸﾘｯﾌﾟ	2	
14	217M2-12221		CLAMP,HOSE	ｸﾗﾝﾌﾟ	1	

FIG.15 RADIATOR PARTS & RESERVE TANK

(F5022160) ﾗｼﾞｴｰﾀﾊﾟｰﾂ&ﾘｻﾞｰﾌﾞﾀﾝｸ

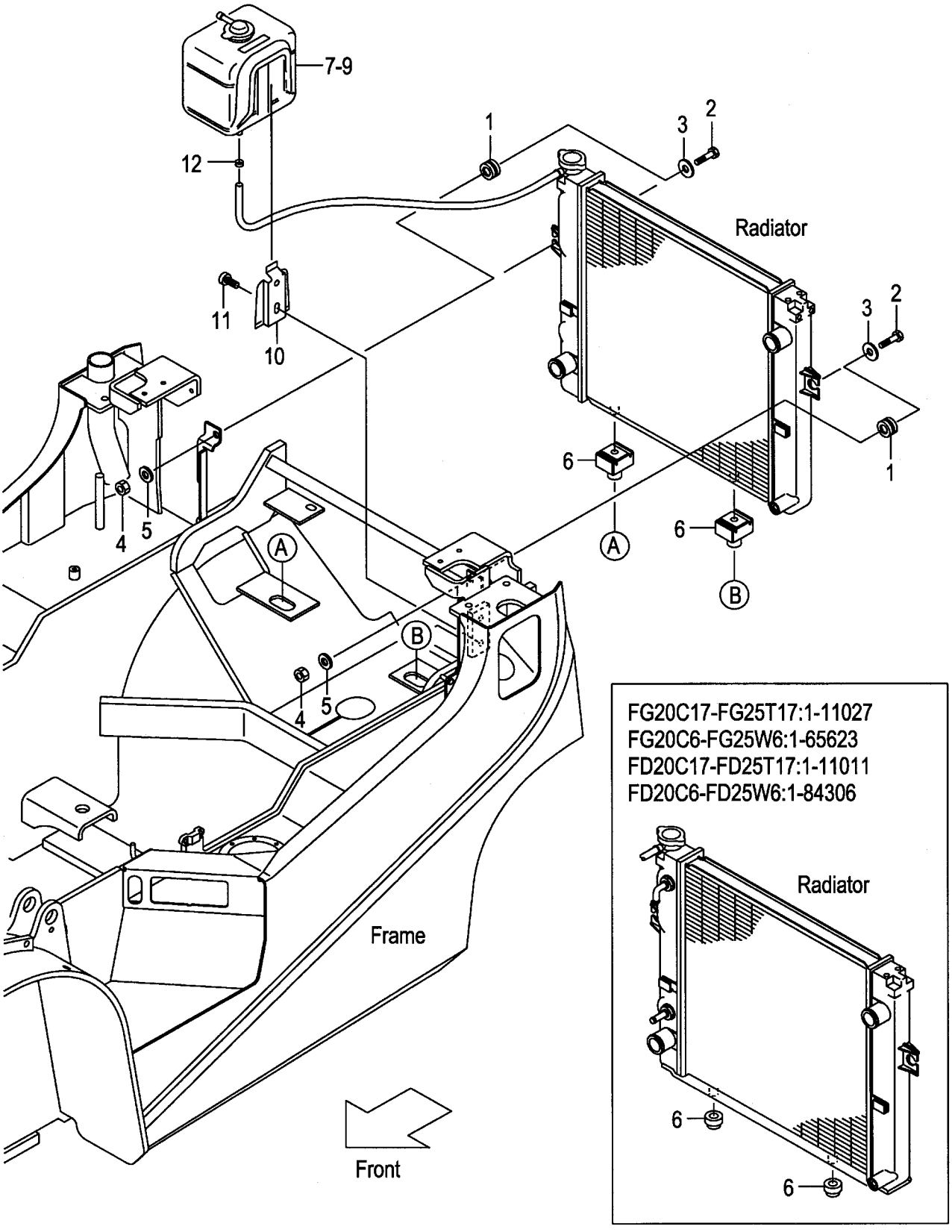

FIG.15

(F5022160)

A:FG20C17 FG20T17 FG25C17 FG25T17 C:FD20C17 FD20T17 FD25C17 FD25T17
B:FG20C6 FG20T6 FG25C6 FG25T6 FG20W6 FG25W6 D:FD20C6 FD20T6 FD25C6 FD25T6 FD20W6 FD25W6

Item No	Part No.	Mark	Description		Req'd	Remarks : Serial No.
1	214A2-12001		RUBBER	ﾗﾊﾞｰ	2	
2	214A2-12021		BOLT	ﾎﾞﾙﾄ	2	
3	22252-32251		WASHER	ﾜｯｼｬ	2	
4	23652-12051		NUT	ﾅｯﾄ	2	
5	02000-00010		WASHER	ﾜｯｼｬ	2	
6	214A2-12011		RUBBER	ﾗﾊﾞｰ	2	A:1-11027 B:1-65623 C:1-11011 D:1-84306
-	239A2-12021		RUBBER	ﾗﾊﾞｰ	2	A:11028- B:65624- C:11012- D:84307-
7	214A2-12111		TANK,RESERVE	ﾀﾝｸ	1	INC.8,9
-	214A2-12121		TANK,RESERVE	ﾀﾝｸ	1	[OKM] INC.8,9
8	214A2-13001		CAP	ｷｬｯﾌﾟ	1	
9	214A2-13011		PACKING	ﾊﾟｯｷﾝｸﾞ	1	
10	214A2-12141		BRACKET	ﾌﾞﾗｹｯﾄ	1	
11	214A2-42611		SCREW	ｽｸﾘｭ	2	
12	214A2-12201		CLIP	ｸﾘｯﾌﾟ	1	A:11028- B:65624- C:11012- D:84307-

FIG.16 FAN SHROUD (GASOLINE:CLUTCH & TOR-CON)

(F5022170) ﾌｧﾝｼｭﾗｳﾄﾞ

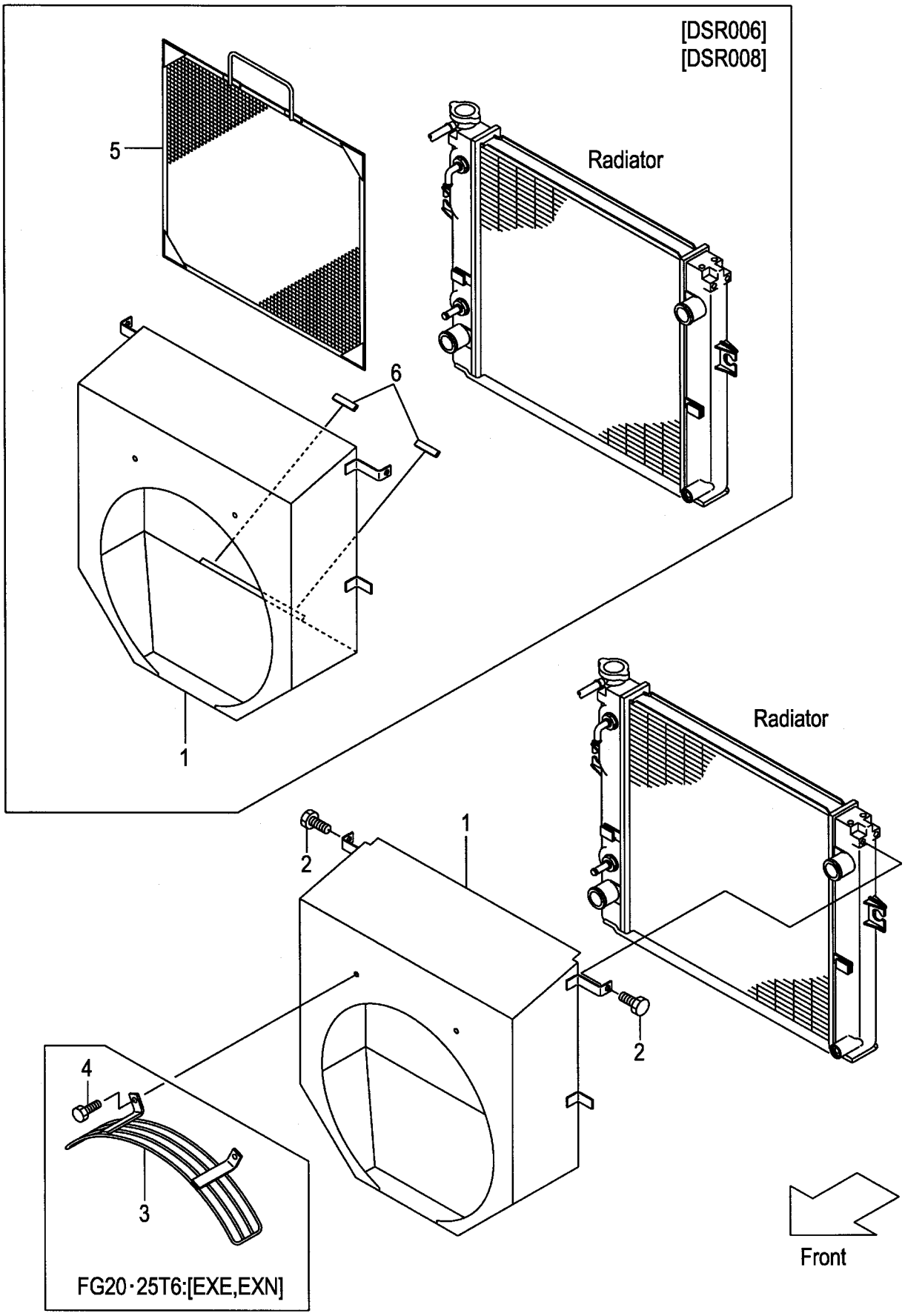

A:FG20C17 FG20T17 FG25C17 FG25T17
B:FG20C6 FG25C6
C:FG20T6 FG25T6

FIG.16
(F5022170)

Item No	Part No.	Mark	Description		Req'd	Remarks : Serial No.
1	237A2-12201		SHROUD,FAN	ｼｭﾗｳﾄﾞ	1	
-	537A6-52001		SHROUD,FAN	ｼｭﾗｳﾄﾞ	1	[DSR006][DSR008]
2	01185-08016		BOLT	ﾎﾞﾙﾄ	2	
3	532B3-82201		GUARD,FAN	ｶﾞｰﾄﾞ	1	C [EXE][EXN]
4	01185-08020		BOLT	ﾎﾞﾙﾄ	2	C [EXE][EXN]
5	539A6-52051		SCREEN,DUST	ｽｸﾘｰﾝ	1	[DSR006]
-	539A6-52151		SCREEN,DUST	ｽｸﾘｰﾝ	1	[DSR008]
6	209P6-42831		EDGING	ｴｯｼﾞﾝｸﾞ	2	[DSR006][DSR008]

FIG.17 FAN SHROUD (GASOLINE:OIL CLUTCH)

(F5022180) ﾌｧﾝｼｭﾗｳﾄﾞ

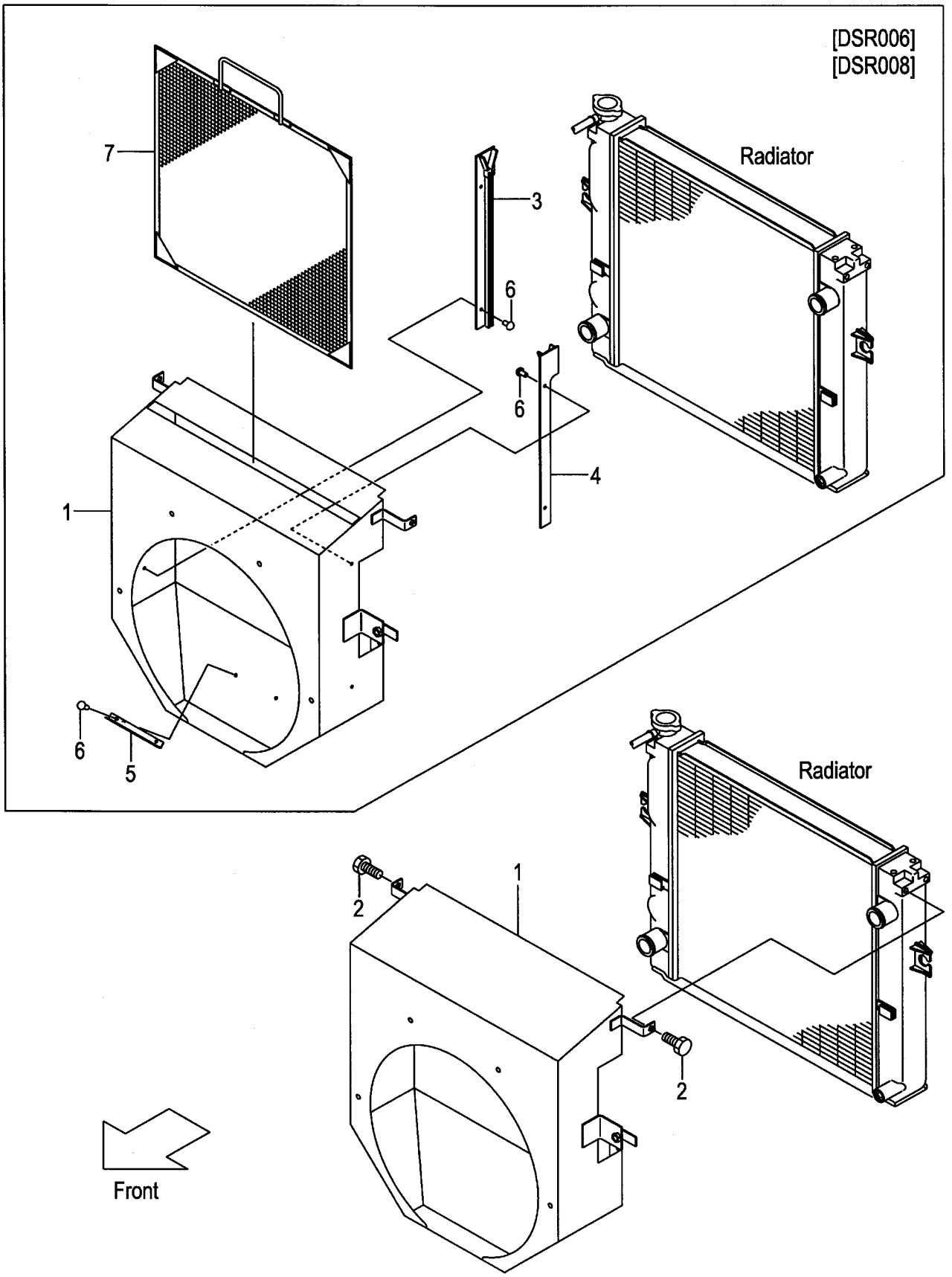

FIG.17

(F5022180)

A:FG20W6 FG25W6

Item No	Part No.	Mark	Description		Req'd	Remarks : Serial No.
A1	537H6-50101		SHROUD-ASSY,FAN	ｼｭﾗｳﾄﾞｱｯｾﾝ	1	[DSR006][DSR008] INC.1-6
1	237H2-12201		SHROUD,FAN	ｼｭﾗｳﾄﾞ	1	
-	537H6-52001		SHROUD,FAN	ｼｭﾗｳﾄﾞ	1	[DSR006][DSR008]
2	01185-08016		BOLT	ﾎﾞﾙﾄ	2	
3	539H6-52251		GUIDE,RH	ｶﾞｲﾄﾞ	1	[DSR006][DSR008]
4	539H6-52351		GUIDE,LH	ｶﾞｲﾄﾞ	1	[DSR006][DSR008]
5	532N6-52011		GUIDE,LOWER	ｶﾞｲﾄﾞ	1	[DSR006][DSR008]
6	22256-42001		RIVET	ﾘﾍﾞｯﾄ	6	[DSR006][DSR008]
7	539H6-52051		SCREEN,DUST	ｽｸﾘｰﾝ	1	[DSR006]
-	539H6-52151		SCREEN,DUST	ｽｸﾘｰﾝ	1	[DSR008]

FIG.18 FAN SHROUD (DIESEL)

(F5022190) ﾌｧﾝｼｭﾗｳﾄﾞ

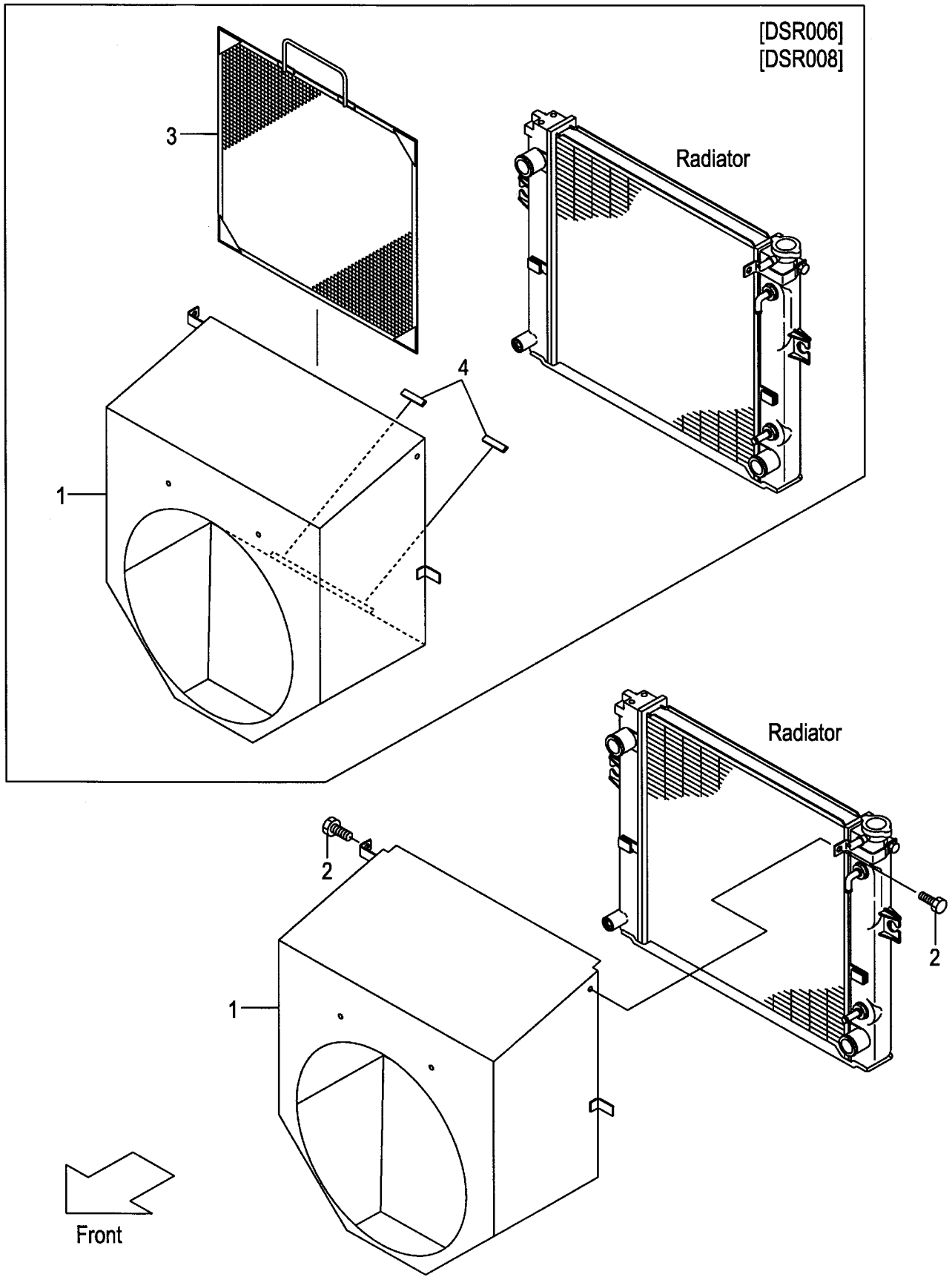

FIG.18

(F5022190)

A:FD20C17 FD20T17 FD25C17 FD25T17

Item No	Part No.	Mark	Description		Req'd	Remarks : Serial No.
1	238A2-12201		SHROUD,FAN	ｼｭﾗｳﾄﾞ	1	
-	538A6-52001		SHROUD,FAN	ｼｭﾗｳﾄﾞ	1	[DSR006][DSR008]
2	01185-08016		BOLT	ﾎﾞﾙﾄ	2	
3	539A6-52051		SCREEN,DUST	ｽｸﾘｰﾝ	1	[DSR006]
-	539A6-52151		SCREEN,DUST	ｽｸﾘｰﾝ	1	[DSR008]
4	209P6-42831		EDGING	ｴｯｼﾞﾝｸﾞ	2	[DSR006][DSR008]

FIG.19 FAN SHROUD (DIESEL:CLUTCH & TOR-CON)

(F50221A0) ﾌｧﾝｼｭﾗｳﾄﾞ

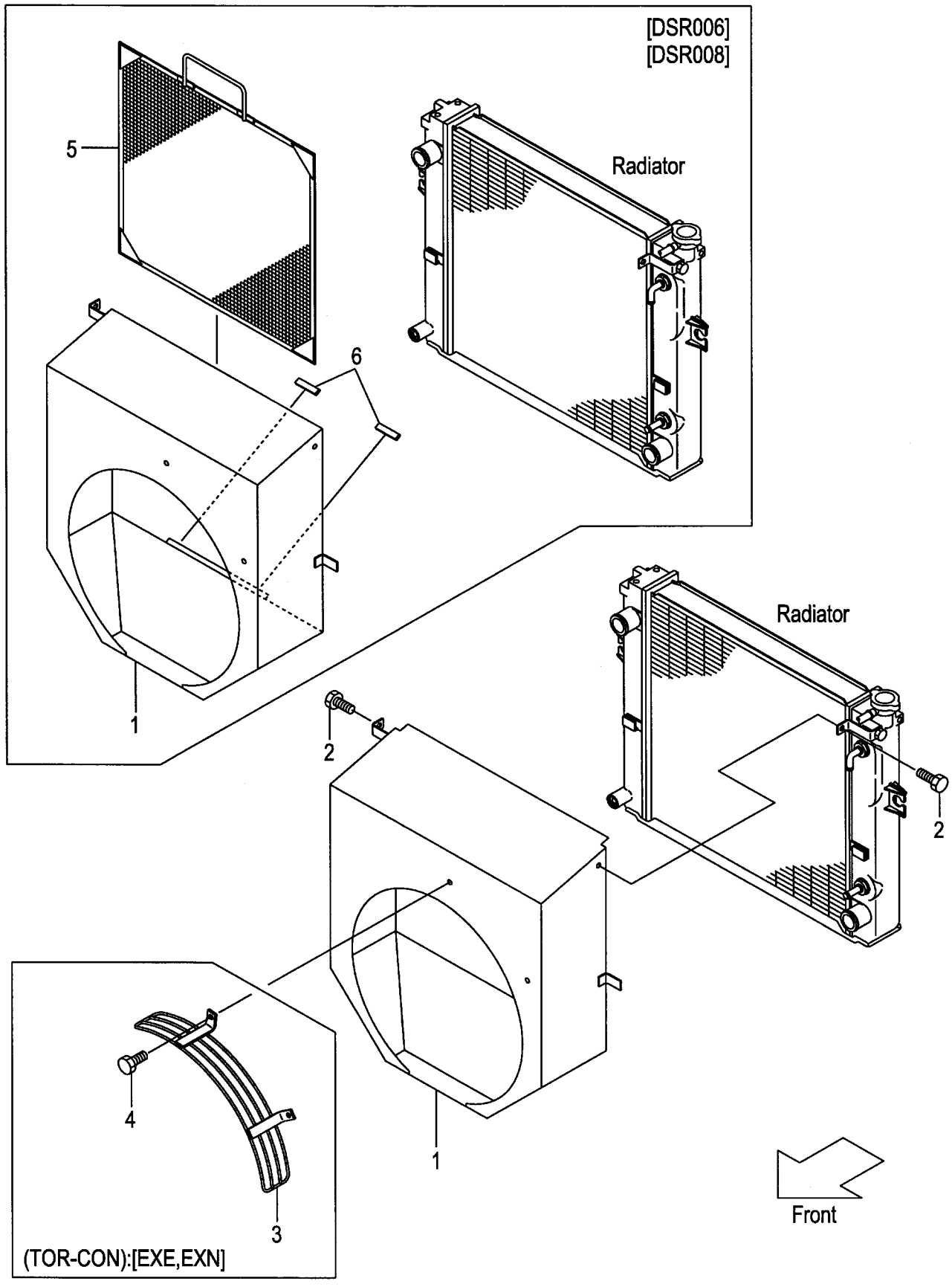

A:FD20C6 FD25C6
B:FD20T6 FD25T6

FIG.19
(F50221A0)

Item No	Part No.	Mark	Description		Req'd	Remarks : Serial No.
1	238F2-12201		SHROUD,FAN	ｼｭﾗｳﾄﾞ	1	
-	538F6-52001		SHROUD,FAN	ｼｭﾗｳﾄﾞ	1	[DSR006][DSR008]
-	538F7-60201		SHROUD,FAN	ｼｭﾗｳﾄﾞ	1	84204- [SCBCR]
2	01185-08016		BOLT	ﾎﾞﾙﾄ	2	
3	532B3-82201		GUARD,FAN	ｶﾞｰﾄﾞ	1	B [EXE][EXN]
4	01185-08020		BOLT	ﾎﾞﾙﾄ	2	B [EXE][EXN]
5	539A6-52051		SCREEN,DUST	ｽｸﾘｰﾝ	1	[DSR006]
-	539A6-52151		SCREEN,DUST	ｽｸﾘｰﾝ	1	[DSR008]
6	209P6-42831		EDGING	ｴｯｼﾞﾝｸﾞ	2	[DSR006][DSR008]

FIG.20 FAN SHROUD (DIESEL:OIL CLUTCH)

(F50221B0) ﾌｧﾝｼｭﾗｳﾄﾞ

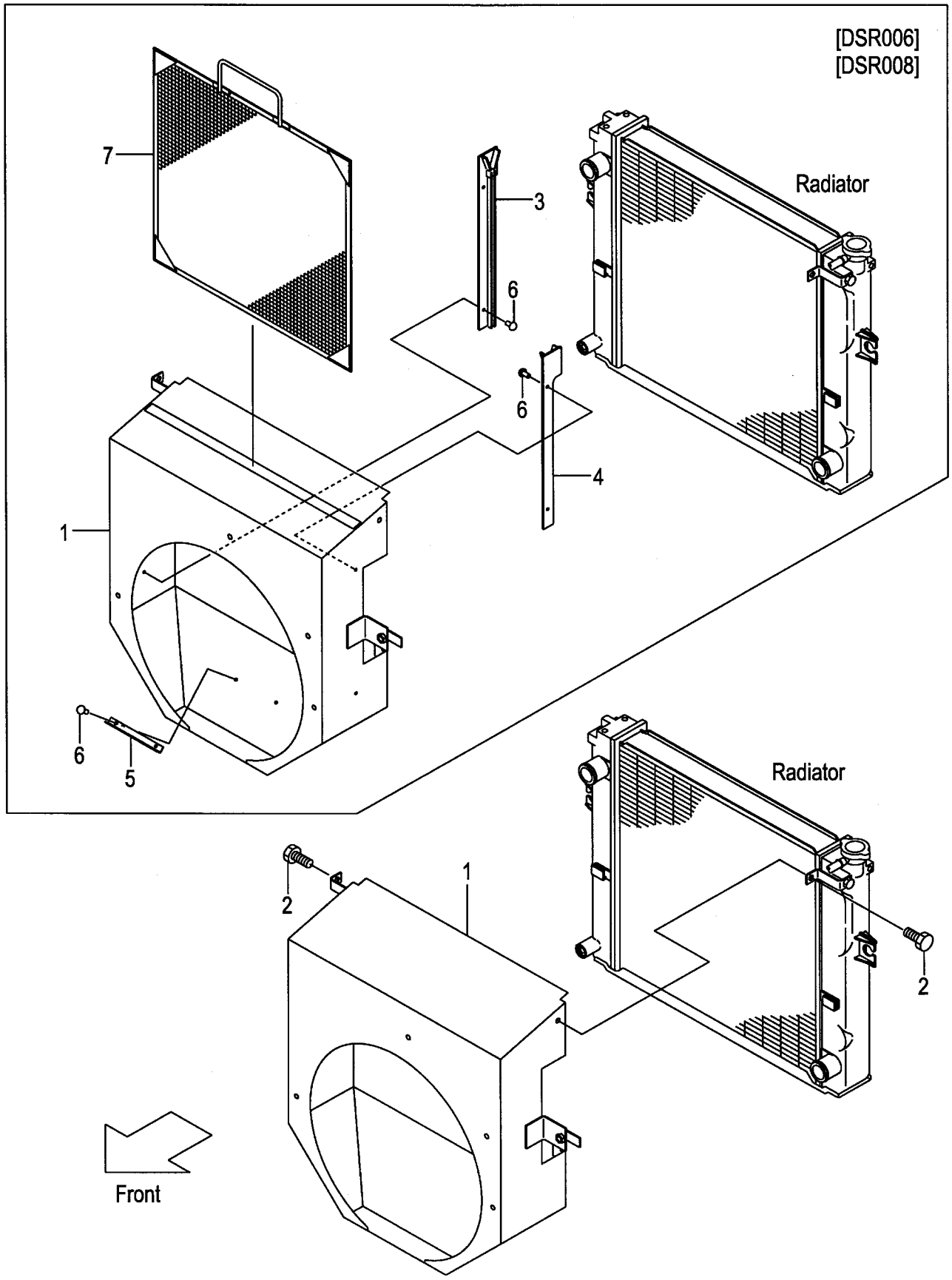

FIG.20

(F50221B0)

A:FD20W6 FD25W6

Item No	Part No.	Mark	Description		Req'd	Remarks : Serial No.
1	538S6-50101		SHROUD,FAN	ｼｭﾗｳﾄﾞ	1	[DSR006][DSR008] INC.1-6
-	238S2-12201		SHROUD,FAN	ｼｭﾗｳﾄﾞ	1	
-	538S6-52001		SHROUD,FAN	ｼｭﾗｳﾄﾞ	1	[DSR006][DSR008]
-	538S7-60201		SHROUD,FAN	ｼｭﾗｳﾄﾞ	1	84204- [SCBCR]
2	01185-08016		BOLT	ﾎﾞﾙﾄ	2	
3	539H6-52251		GUIDE,RH	ｶﾞｲﾄﾞ	1	[DSR006][DSR008]
4	539H6-52351		GUIDE,LH	ｶﾞｲﾄﾞ	1	[DSR006][DSR008]
5	532N6-52011		GUIDE,LOWER	ｶﾞｲﾄﾞ	1	[DSR006][DSR008]
6	22256-42001		RIVET	ﾘﾍﾞｯﾄ	6	[DSR006][DSR008]
7	539H6-52051		SCREEN,DUST	ｽｸﾘｰﾝ	1	[DSR006]
-	539H6-52151		SCREEN,DUST	ｽｸﾘｰﾝ	1	[DSR008]

FIG.21 FUEL SYSTEM (SUPPLY)

(F5022210) フューエルシステム

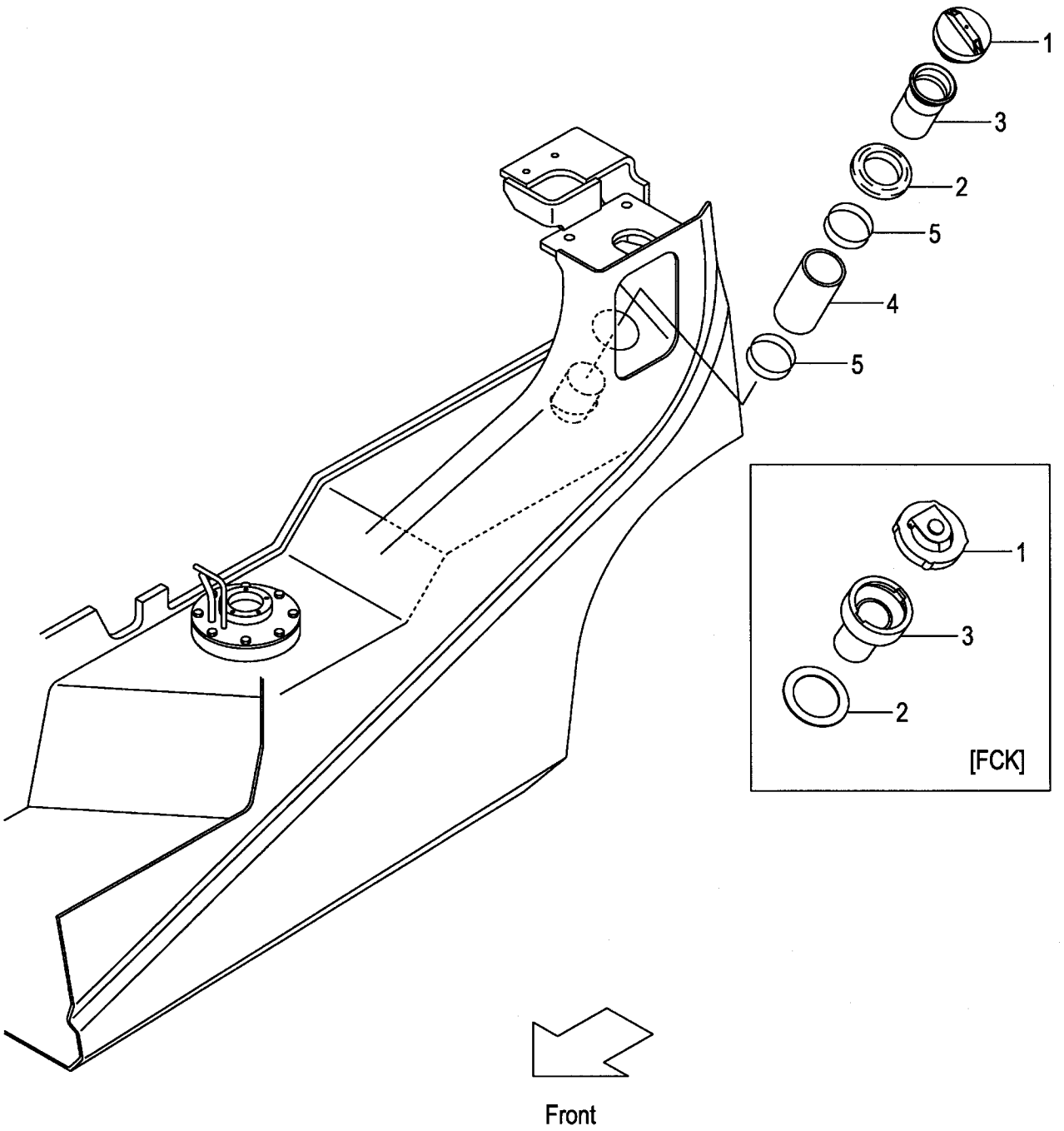

FIG.21

(F5022210)

A:FG20C17 FG20T17 FG25C17 FG25T17 C:FD20C17 FD20T17 FD25C17 FD25T17
B:FG20C6 FG20T6 FG25C6 FG25T6 FG20W6 FG25W6 D:FD20C6 FD20T6 FD25C6 FD25T6 FD20W6 FD25W6

Item No	Part No.	Mark	Description		Req'd	Remarks : Serial No.
1	216G2-22051		CAP,FUEL	ｷｬｯﾌﾟ	1	
-	518G8-12001		CAP,FUEL	ｷｬｯﾌﾟ	1	[FCK]
2	216G2-22211		GROMMET	ｸﾞﾛﾒｯﾄ	1	
-	518G8-12101		RUBBER	ﾗﾊﾞｰ	1	[FCK]
3	218G2-22001		PIPE,FUEL	ﾊﾟｲﾌﾟ	1	
-	518G8-12051		PIPE,FUEL	ﾊﾟｲﾌﾟ	1	[FCK]
4	218G2-22051		HOSE,FUEL	ﾎｰｽ	1	
5	04911-00060		CLIP	ｸﾘｯﾌﾟ	2	

FIG.22 FUEL SYSTEM (SUCTION)

(F5022220) フューエルシステム

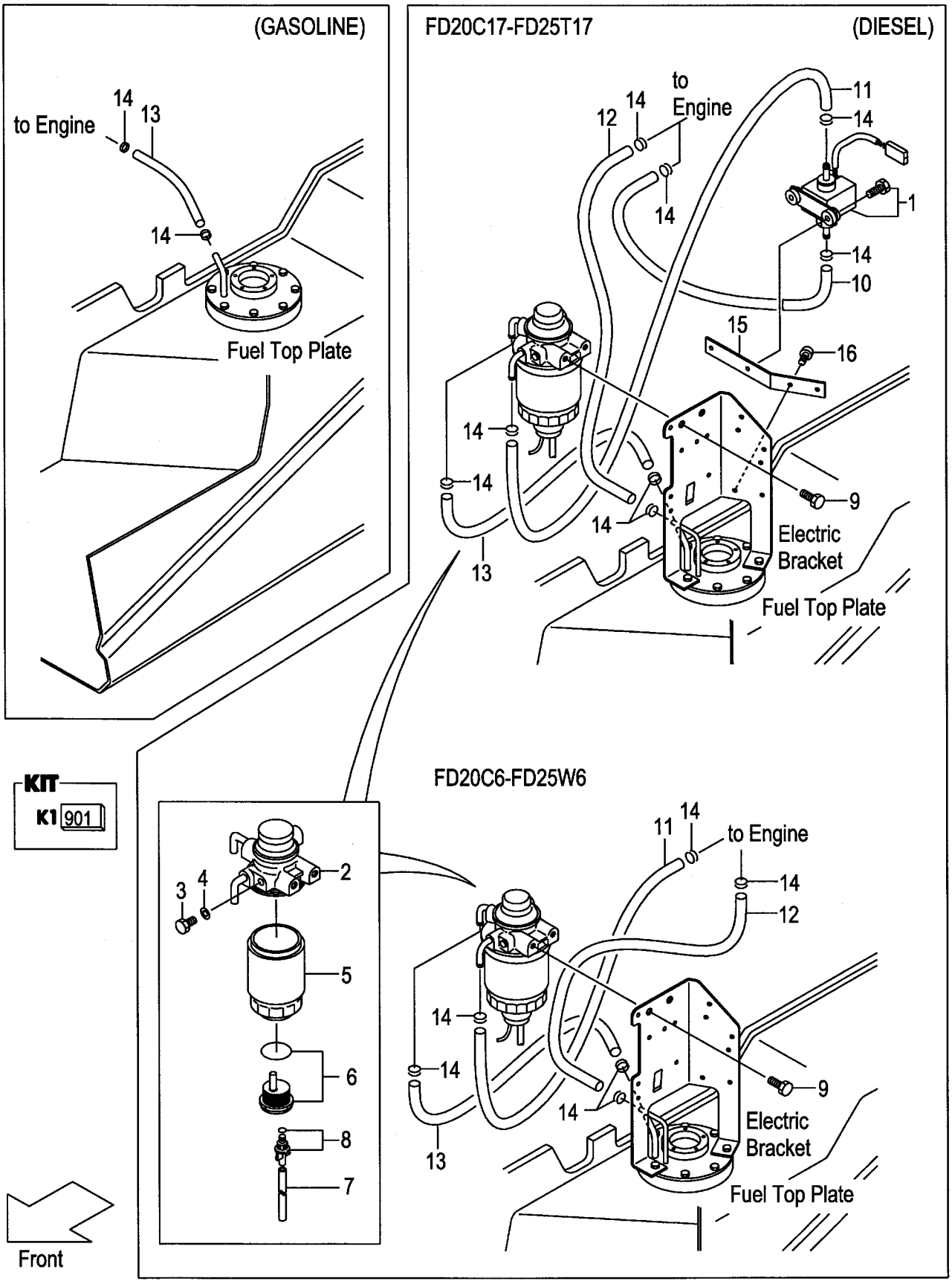

FIG.22

(F5022220)

A:FG20C17 FG20T17 FG25C17 FG25T17 C:FD20C17 FD20T17 FD25C17 FD25T17
B:FG20C6 FG20T6 FG25C6 FG25T6 FG20W6 FG25W6 D:FD20C6 FD20T6 FD25C6 FD25T6 FD20W6 FD25W6

Item No	Part No.	Mark	Description		Req'd	Remarks : Serial No.
1	220F2-22001		PUMP,FUEL	ﾎﾟﾝﾌﾟ	1	C
A1	24662-22032		FILTER-ASSY,FUEL	ﾌｨﾙﾀｱｯｾﾝ	1	C,D
						INC.2-8
901	Z-8-94367-294-0	K1	KIT,SENSOR	ｾﾝｻｰｷｯﾄ	1	C,D
						INC.6-8
2	NO PART NO.	#	BODY	ﾎﾞﾃﾞｨ	1	C,D
3	Z-8-94132-674-0		PLUG	ﾌﾟﾗｸﾞ	1	C,D
4	Z-8-94132-675-0		GASKET	ｶﾞｽｹｯﾄ	1	C,D
5	20801-02141		CARTRIDGE	ｶｰﾄﾘｯｼﾞ	1	C,D
6	NO PART NO.	#*	SENSOR	ｾﾝｻ	1	C,D
7	Z-8-94367-956-0	*	HOSE	ﾎｰｽ	1	C,D
8	Z-8-94367-957-0	*	PLUG	ﾌﾟﾗｸﾞ	1	C,D
9	01183-08016		BOLT	ﾎﾞﾙﾄ	2	C,D
10	21152-22121		HOSE,FUEL,7.5X420	ﾎｰｽ	1	C
11	21152-22151		HOSE,FUEL,7.5X300	ﾎｰｽ	1	C
-	214A2-22071		HOSE,FUEL,7.5X550	ﾎｰｽ	1	D
12	24662-22141		HOSE,FUEL,6.5X380	ﾎｰｽ	1	C,D
13	21152-22151		HOSE,FUEL,7.5X300	ﾎｰｽ	1	A,B
-	24662-22131		HOSE,FUEL,7.5X270	ﾎｰｽ	1	C,D
14	22192-22091		CLIP	ｸﾘｯﾌﾟ	2	A,B
-	22192-22091		CLIP	ｸﾘｯﾌﾟ	8	C
-	22192-22091		CLIP	ｸﾘｯﾌﾟ	6	D
15	238A2-22002		BRACKET,PUMP	ﾌﾞﾗｹｯﾄ	1	C
16	214A2-42611		SCREW	ｽｸﾘｭ	2	C

FIG.23 EXHAUST SYSTEM (GASOLINE)

(F5022310) エキゾーストシステム

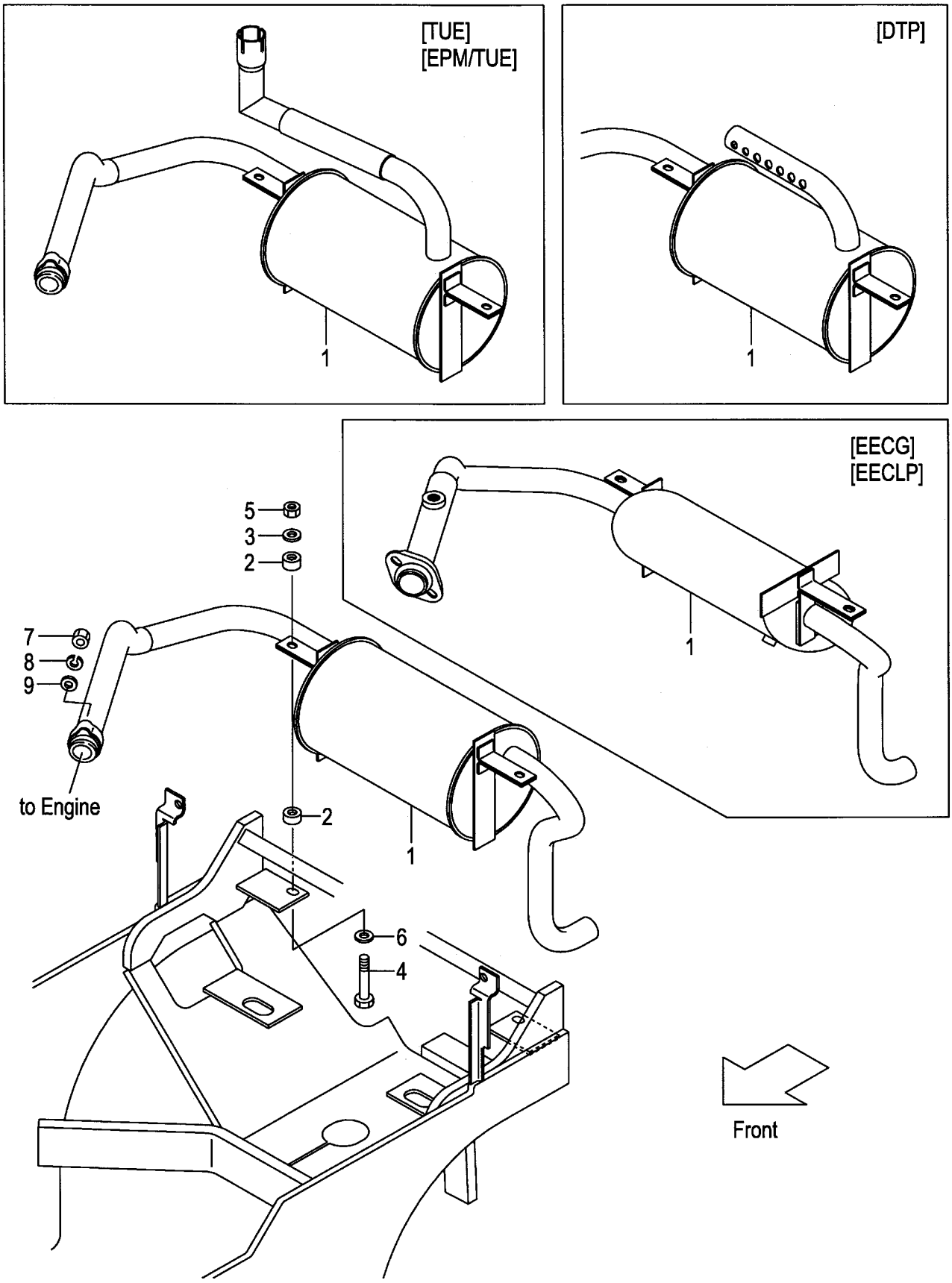

A:FG20C17 FG20T17 FG25C17 FG25T17:1-11056
B:FG20C6 FG20T6 FG25C6 FG25T6:1-66998
C:FG20W6 FG25W6:1-66998

FIG.23
(F5022310)

Item No	Part No.	Mark	Description		Req'd	Remarks : Serial No.
1	237A2-30101		MUFFLER	ﾏﾌﾗ	1	
-	537A0-80101		MUFFLER	ﾏﾌﾗ	1	[TUE]
-	537A1-70001		MUFFLER	ﾏﾌﾗ	1	[EPM]
-	537A0-80401		MUFFLER	ﾏﾌﾗ	1	[EPM/TUE]
-	537A1-72101		MUFFLER	ﾏﾌﾗ	1	[DTP]
-	536G1-70201		MUFFLER	ﾏﾌﾗ	1	B [EECG][EECLP]
2	22252-32241		RUBBER	ﾗﾊﾞｰ	4	
3	22252-32251		WASHER	ﾜｯｼｬ	2	
4	21232-32551		BOLT	ﾎﾞﾙﾄ	2	
5	23652-12051		NUT	ﾅｯﾄ	2	
6	02000-00010		WASHER	ﾜｯｼｬ	2	
7	01400-20008		NUT	ﾅｯﾄ	2	
8	02010-00008		WASHER	ﾜｯｼｬ	2	
9	02000-00008		WASHER	ﾜｯｼｬ	2	

FIG.23A EXHAUST SYSTEM (GASOLINE)

(F5022311) エキゾーストシステム

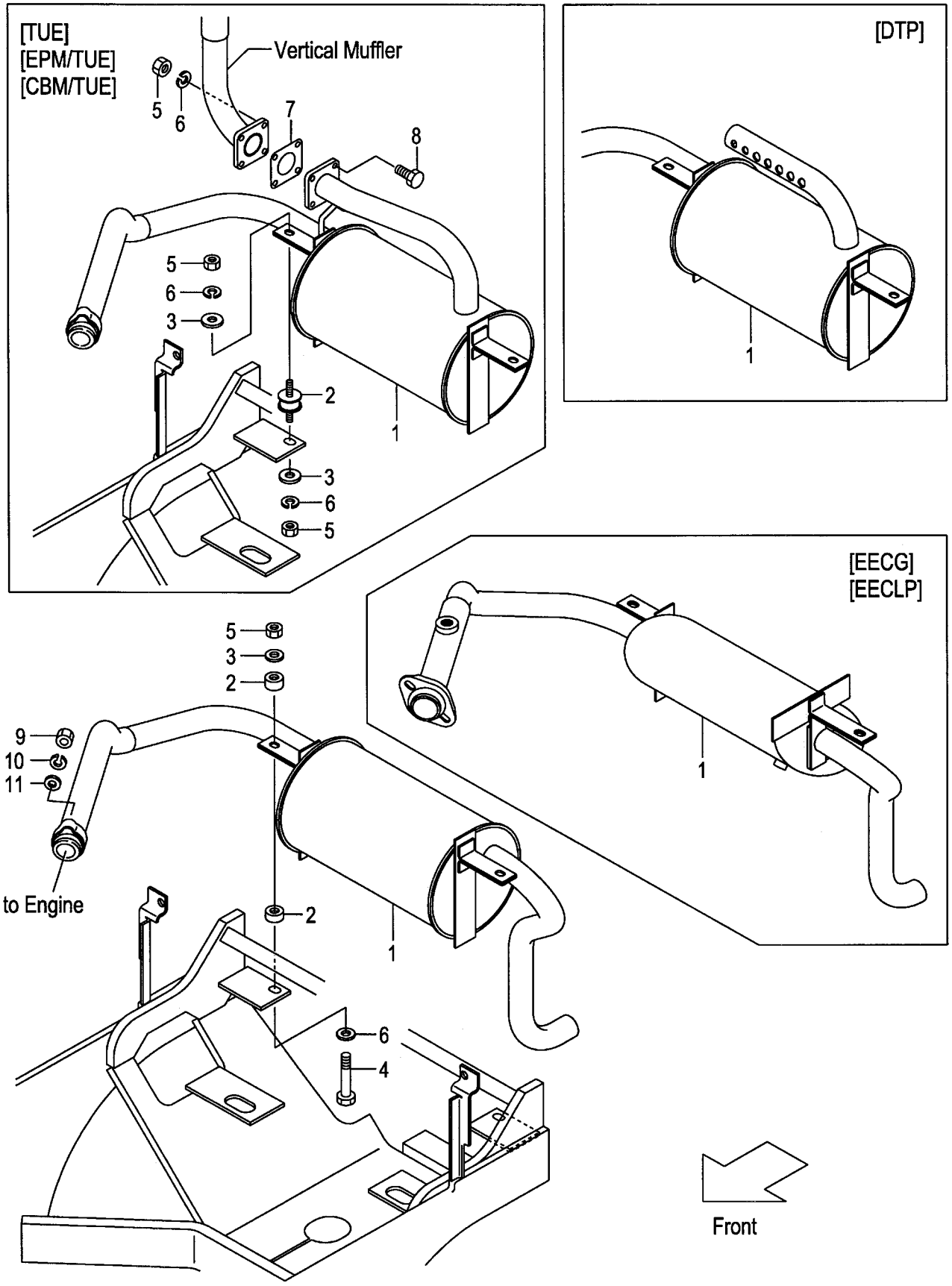

A:FG20C17 FG20T17 FG25C17 FG25T17:11057-
B:FG20C6 FG20T6 FG25C6 FG25T6:66999-
C:FG20W6 FG25W6:66999-

FIG.23A
(F5022311)

Item No	Part No.	Mark	Description		Req'd	Remarks : Serial No.
1	237A2-30101		MUFFLER	ﾏﾌﾗ	1	
-	537A0-80102		MUFFLER	ﾏﾌﾗ	1	[TUE]
-	537A1-70001		MUFFLER	ﾏﾌﾗ	1	[EPM]
-	537A0-80402		MUFFLER	ﾏﾌﾗ	1	[EPM/TUE]
-	537A1-70011		MUFFLER	ﾏﾌﾗ	1	[CBM]
-	537A1-72101		MUFFLER	ﾏﾌﾗ	1	[DTP]
-	536G1-70201		MUFFLER	ﾏﾌﾗ	1	B
						[EECG][EECLP]
2	22252-32241		RUBBER	ﾗﾊﾞｰ	4	
-	539A0-82201		RUBBER	ﾗﾊﾞｰ	2	[TUE][EPM/TUE]
3	22252-32251		WASHER	ﾜｯｼｬ	2	
-	124T3-43041		PLATE	ﾌﾟﾚｰﾄ	4	[TUE][EPM/TUE]
4	21232-32551		BOLT	ﾎﾞﾙﾄ	2	(WITHOUT TUE,EPM/TUE)
5	23652-12051		NUT	ﾅｯﾄ	2	
-	01400-00008		NUT	ﾅｯﾄ	8	[TUE][EPM/TUE]
6	02000-00010		WASHER	ﾜｯｼｬ	2	
-	02010-00008		WASHER	ﾜｯｼｬ	8	[TUE][EPM/TUE]
7	217G2-32001		GASKET	ｶﾞｽｹｯﾄ	1	[TUE][EPM/TUE]
8	01182-08025		BOLT	ﾎﾞﾙﾄ	4	[TUE][EPM/TUE]
9	01400-20008		NUT	ﾅｯﾄ	2	
10	02010-00008		WASHER	ﾜｯｼｬ	2	
11	02000-00008		WASHER	ﾜｯｼｬ	2	

FIG.24 EXHAUST SYSTEM (DIESEL)

(F5022320) エキゾーストシステム

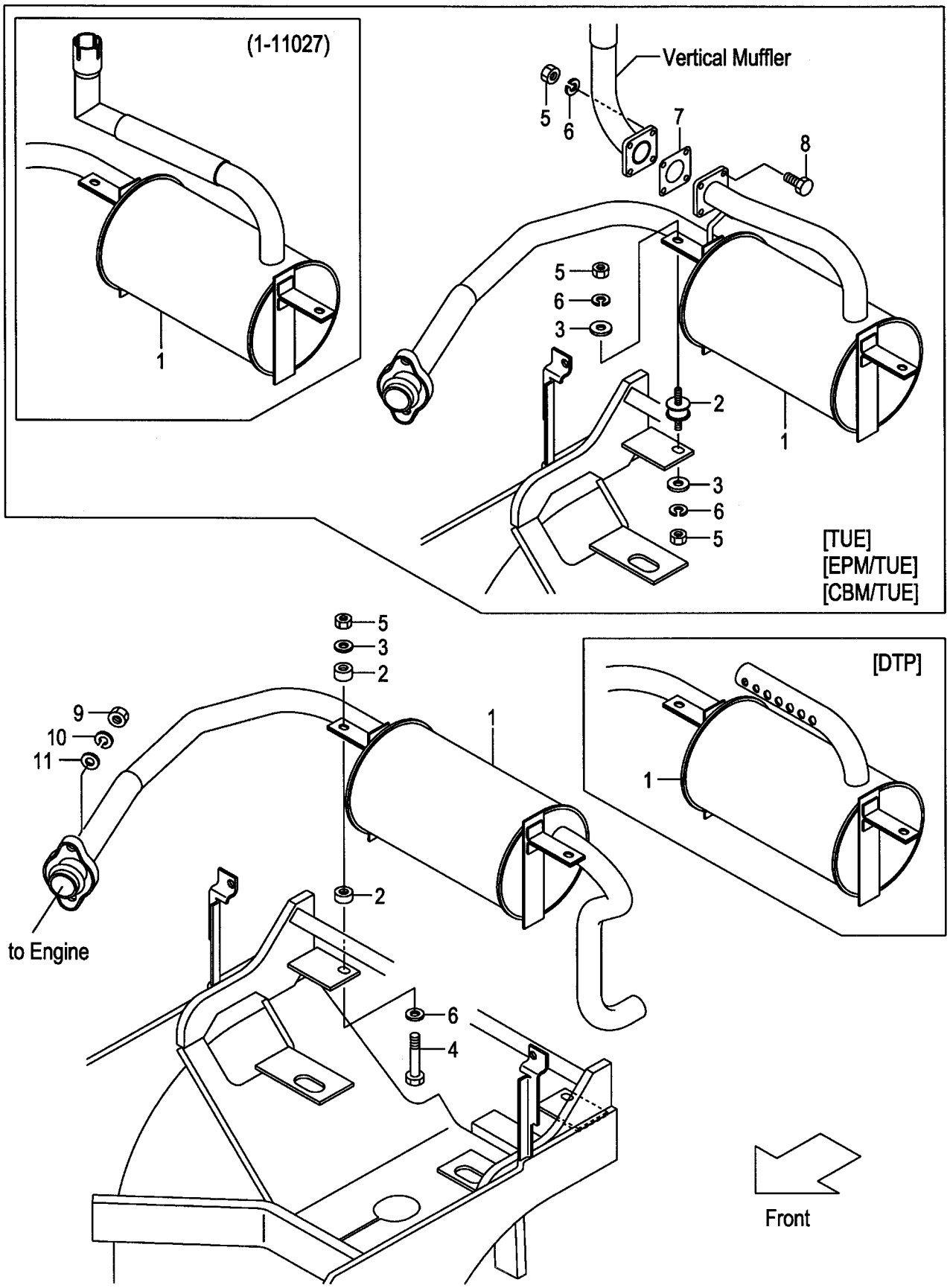

A:FD20C17 FD20T17 FD25C17 FD25T17

Item No	Part No.	Mark	Description		Req'd	Remarks : Serial No.
1	238A2-30101		MUFFLER	ﾏﾌﾗ	1	
-	538A0-80101		MUFFLER	ﾏﾌﾗ	1	1-11027 [TUE]
-	538A0-80102		MUFFLER	ﾏﾌﾗ	1	11028- [TUE]
-	538A1-70001		MUFFLER	ﾏﾌﾗ	1	[EPM]
-	538A0-80401		MUFFLER	ﾏﾌﾗ	1	1-11027 [EPM/TUE]
-	538A0-80402		MUFFLER	ﾏﾌﾗ	1	11028- [EPM/TUE]
-	538A1-70011		MUFFLER	ﾏﾌﾗ	1	[CBM]
-	538A0-80501		MUFFLER	ﾏﾌﾗ	1	1-11027 [CBM/TUE]
-	538A0-80502		MUFFLER	ﾏﾌﾗ	1	11028- [CBM/TUE]
-	538A1-72101		MUFFLER	ﾏﾌﾗ	1	[DTP]
2	22252-32241		RUBBER	ﾗﾊﾞｰ	4	
-	22252-32241		RUBBER	ﾗﾊﾞｰ	4	1-11027 [TUE][EPM/TUE][CBM/TUE]
-	539A0-82201		RUBBER	ﾗﾊﾞｰ	2	11028- [TUE][EPM/TUE][CBM/TUE]
3	22252-32251		WASHER	ﾜｯｼｬ	2	
-	22252-32251		WASHER	ﾜｯｼｬ	2	1-11027 [TUE][EPM/TUE][CBM/TUE]
-	124T3-43041		PLATE	ﾌﾟﾚｰﾄ	4	11028- [TUE][EPM/TUE][CBM/TUE]
4	21232-32551		BOLT	ﾎﾞﾙﾄ	2	1-11027
-	21232-32551		BOLT	ﾎﾞﾙﾄ	2	11028- (WITHOUT TUE,EPM/TUE,CBM/TUE)
5	23652-12051		NUT	ﾅｯﾄ	2	
-	23652-12051		NUT	ﾅｯﾄ	2	1-11027 [TUE][EPM/TUE][CBM/TUE]
-	01400-00008		NUT	ﾅｯﾄ	8	11028- [TUE][EPM/TUE][CBM/TUE]
6	02000-00010		WASHER	ﾜｯｼｬ	2	
-	02000-00010		WASHER	ﾜｯｼｬ	2	1-11027 [TUE][EPM/TUE][CBM/TUE]
-	02010-00008		WASHER	ﾜｯｼｬ	8	11028- [TUE][EPM/TUE][CBM/TUE]
7	217G2-32001		GASKET	ｶﾞｽｹｯﾄ	1	1-11027 [TUE][EPM/TUE][CBM/TUE]
8	01182-08025		BOLT	ﾎﾞﾙﾄ	4	11028- [TUE][EPM/TUE][CBM/TUE]
9	01400-20008		NUT	ﾅｯﾄ	2	
10	02010-00008		WASHER	ﾜｯｼｬ	2	
11	02000-00008		WASHER	ﾜｯｼｬ	2	

FIG.25 EXHAUST SYSTEM (DIESEL)

(F5022330) エキゾーストシステム

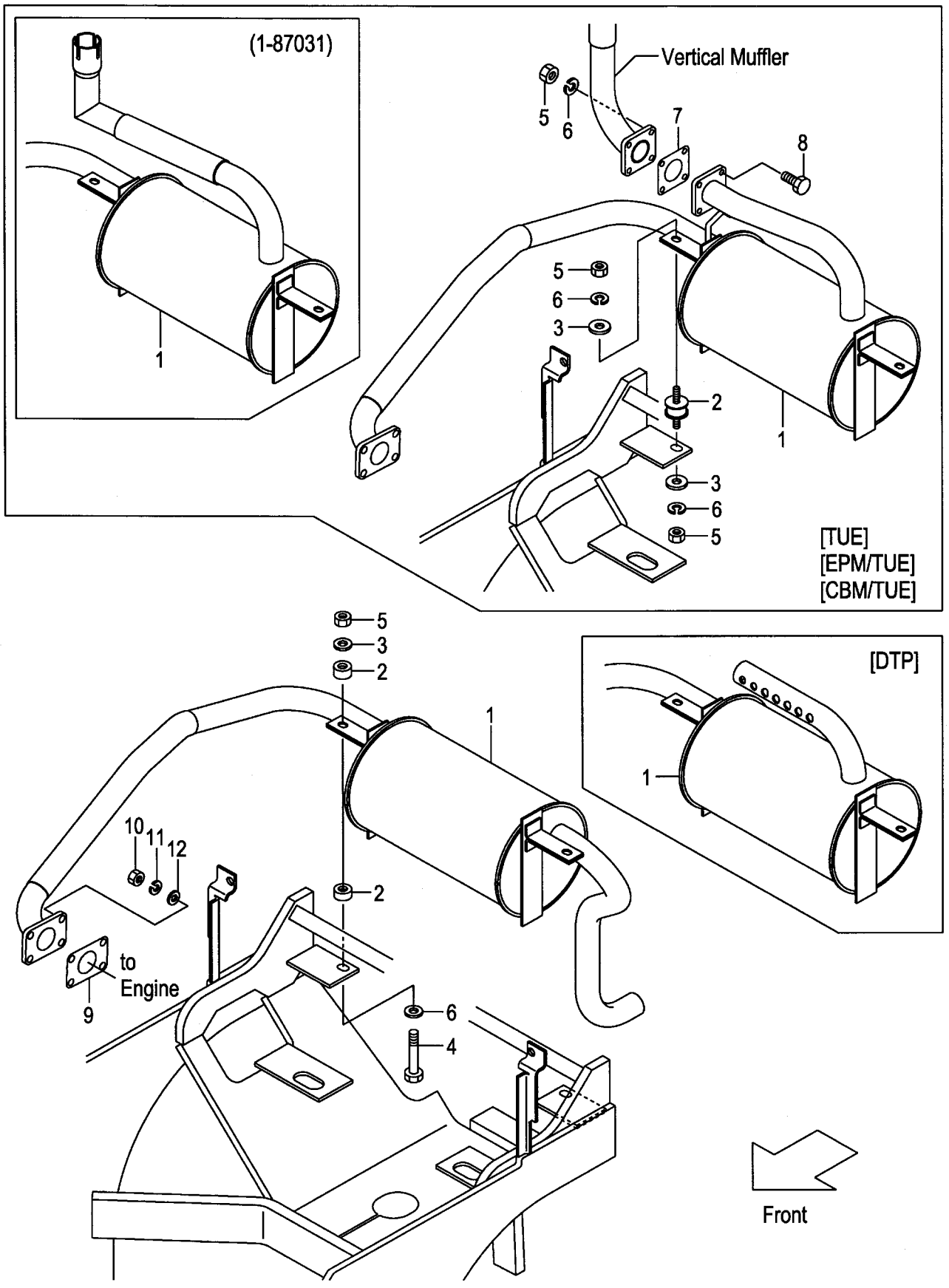

A:FD20C6 FD20T6 FD25C6 FD25T6 FD20W6 FD25W6

Item No	Part No.	Mark	Description		Req'd	Remarks : Serial No.
1	238F2-30101		MUFFLER	ﾏﾌﾗ	1	
-	538F0-80101		MUFFLER	ﾏﾌﾗ	1	1-87031 [TUE]
-	538F0-80102		MUFFLER	ﾏﾌﾗ	1	87032- [TUE]
-	538F1-70001		MUFFLER	ﾏﾌﾗ	1	[EPM]
-	538F0-80401		MUFFLER	ﾏﾌﾗ	1	1-87031 [EPM/TUE]
-	538F0-80402		MUFFLER	ﾏﾌﾗ	1	87032- [EPM/TUE]
-	538F1-70011		MUFFLER	ﾏﾌﾗ	1	[CBM]
-	538F0-80501		MUFFLER	ﾏﾌﾗ	1	1-87031 [CBM/TUE]
-	538F0-80502		MUFFLER	ﾏﾌﾗ	1	87032- [CBM/TUE]
-	538F1-72101		MUFFLER	ﾏﾌﾗ	1	[DTP]
2	22252-32241		RUBBER	ﾗﾊﾞｰ	4	
-	22252-32241		RUBBER	ﾗﾊﾞｰ	4	1-87031 [TUE][EPM/TUE][CBM/TUE]
-	539A0-82201		RUBBER	ﾗﾊﾞｰ	2	87032- [TUE][EPM/TUE][CBM/TUE]
3	22252-32251		WASHER	ﾜｯｼｬ	2	
-	22252-32251		WASHER	ﾜｯｼｬ	2	1-87031 [TUE][EPM/TUE][CBM/TUE]
-	124T3-43041		PLATE	ﾌﾟﾚｰﾄ	4	87032- [TUE][EPM/TUE][CBM/TUE]
4	21232-32551		BOLT	ﾎﾞﾙﾄ	2	1-87031
-	21232-32551		BOLT	ﾎﾞﾙﾄ	2	87032- (WITHOUT TUE,EPM/TUE,CBM/TUE)
5	23652-12051		NUT	ﾅｯﾄ	2	
-	23652-12051		NUT	ﾅｯﾄ	2	1-87031 [TUE][EPM/TUE][CBM/TUE]
-	01400-00008		NUT	ﾅｯﾄ	8	87032- [TUE][EPM/TUE][CBM/TUE]
6	02000-00010		WASHER	ﾜｯｼｬ	2	
-	02000-00010		WASHER	ﾜｯｼｬ	2	1-87031 [TUE][EPM/TUE][CBM/TUE]
-	02010-00008		WASHER	ﾜｯｼｬ	8	87032- [TUE][EPM/TUE][CBM/TUE]
7	217G2-32001		GASKET	ｶﾞｽｹｯﾄ	1	87032- [TUE][EPM/TUE][CBM/TUE]
8	01182-08025		BOLT	ﾎﾞﾙﾄ	4	87032- [TUE][EPM/TUE][CBM/TUE]
9	224G2-32011		GASKET	ｶﾞｽｹｯﾄ	1	
10	01400-20010		NUT	ﾅｯﾄ	4	
11	02010-00010		WASHER	ﾜｯｼｬ	4	
12	02000-00010		WASHER	ﾜｯｼｬ	4	

FIG.26 EXHAUST SYSTEM (DIESEL):[DPF]

(F5022340) エキゾーストシステム

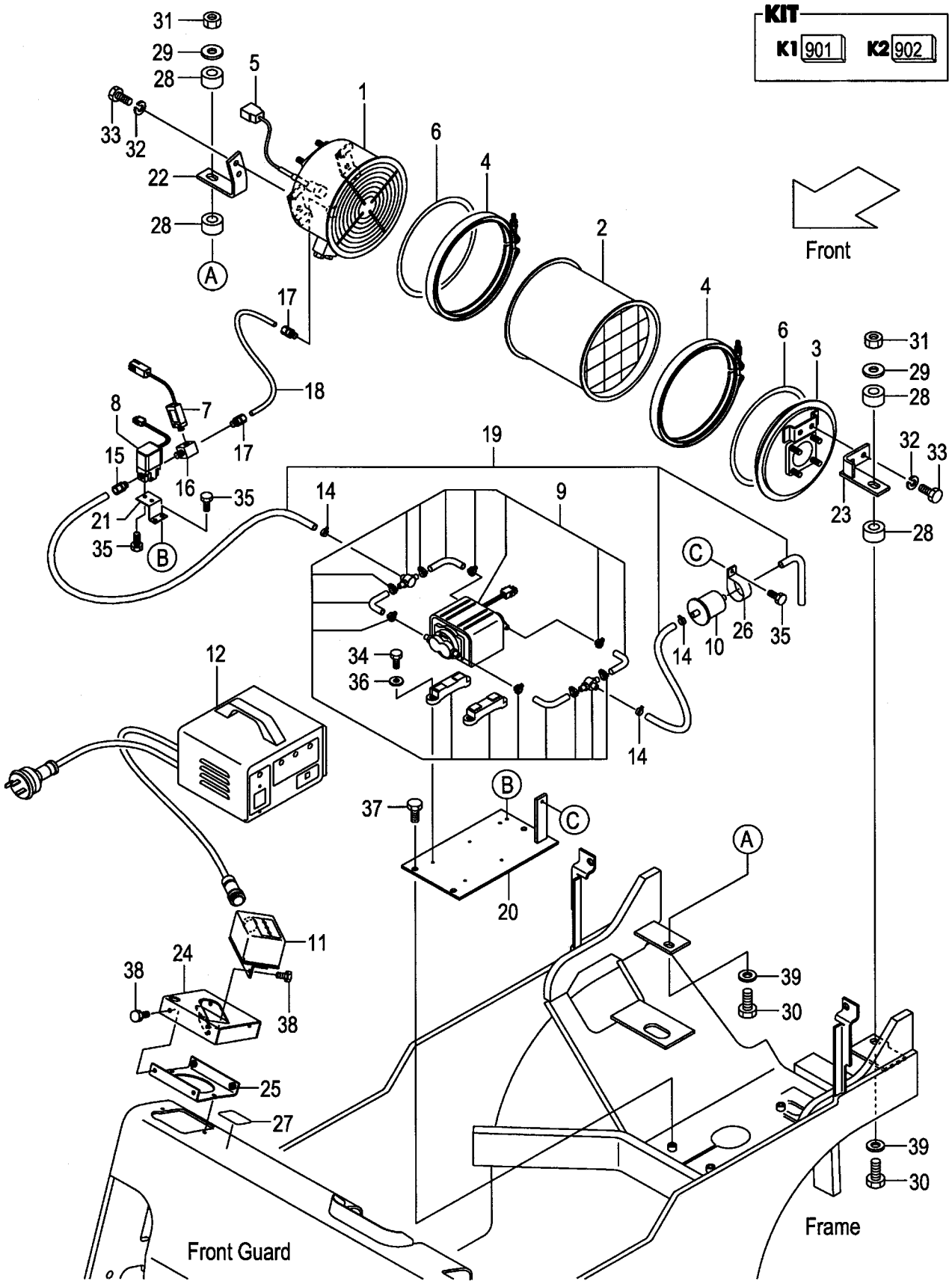

A:FD20C6 FD20T6 FD25C6 FD25T6 FD20W6 FD25W6

Item No	Part No.	Mark	Description		Req'd	Remarks : Serial No.
901	509P5-90101	K1	KIT,DPF-MUFFLER	ﾏﾌﾗｷｯﾄ	1	[DPF] INC.1-15
902	509P5-92511	K2	KIT,PIPING	ﾊﾟｲﾋﾟﾝｸﾞｷｯﾄ	1	[DPF] INC.14,15
A1	509P5-92001	*	MUFFLER-ASSY,DPF	ﾏﾌﾗｱｯｾﾝ	1	[DPF] INC.1-6
1	509P5-92011	*	UNIT,INLET	ﾕﾆｯﾄ	1	[DPF]
2	509P5-92021	*	UNIT,FILTER	ﾕﾆｯﾄ	1	[DPF]
3	509P5-92031	*	UNIT,OUTLET	ﾕﾆｯﾄ	1	[DPF]
4	509P5-92041	*	V-BAND	Vﾊﾞﾝﾄﾞ	2	[DPF]
5	509P5-92051	*	SENSOR,TEMP	ｾﾝｻ	1	[DPF]
6	509P5-92061	*	GASKET	ｶﾞｽｹｯﾄ	2	[DPF]
7	509P5-92071	*	SENSOR,PRESS	ｾﾝｻ	1	[DPF]
8	509P5-92081	*	VALVE,SOLENOIDE	ﾊﾞﾙﾌﾞ	1	[DPF]
9	509P5-92091	*	PUMP,AIR	ﾎﾟﾝﾌﾟ	1	[DPF]
10	509P5-92101	*	FILTER,AIR	ﾌｨﾙﾀ	1	[DPF]
11	509P5-92111	*	UNIT,MONITOR	ﾕﾆｯﾄ	1	[DPF]
12	509P5-92121	*	UNIT,CONTROLLER	ﾕﾆｯﾄ	1	[DPF]
13	509P5-92241	*†	KIT,CONNECTOR	ｺﾈｸﾀｷｯﾄ	1	[DPF]
14	NO PART NO.	*#	CLIP	ｸﾘｯﾌﾟ	3	[DPF]
15	NO PART NO.	*#	NIPPLE	ﾆｯﾌﾟﾙ	1	[DPF]
16	509P5-92181		THREE-WAY	ｽﾘｰｳｴｲ	1	[DPF]
17	509S5-92241		NIPPLE	ﾆｯﾌﾟﾙ	2	[DPF]
18	509P5-92211		PIPE,COPPER	ﾊﾟｲﾌﾟ	1	[DPF]
19	509P5-92231		HOSE	ﾎｰｽ	1	[DPF]
20	539A5-92261		BRACKET,PUMP	ﾌﾞﾗｹｯﾄ	1	[DPF]
21	539A5-92251		BRACKET,VALVE	ﾌﾞﾗｹｯﾄ	1	[DPF]
22	539A5-92131		BRACKET,MUFFLER,RH	ﾌﾞﾗｹｯﾄ	1	[DPF]
23	539A5-92141		BRACKET,MUFFLER,LH	ﾌﾞﾗｹｯﾄ	1	[DPF]
24	539A5-92371		BRACKET,MONITOR	ﾌﾞﾗｹｯﾄ	1	[DPF]
25	516G1-42021		BRACKET	ﾌﾞﾗｹｯﾄ	1	[DPF]
26	509P5-92491		BAND	ﾊﾞﾝﾄﾞ	1	[DPF]
27	509P5-92521		DECAL,DPF-CAUTION	ﾃﾞｶﾙ	1	[DPF]
28	22252-32241		RUBBER	ﾗﾊﾞｰ	4	[DPF]
29	22252-32251		WASHER	ﾜｯｼｬ	2	[DPF]
30	21232-32551		BOLT	ﾎﾞﾙﾄ	2	[DPF]
31	23652-12051		NUT	ﾅｯﾄ	2	[DPF]
32	02013-00008		WASHER	ﾜｯｼｬ	4	[DPF]
33	01109-08020		BOLT	ﾎﾞﾙﾄ	4	[DPF]
34	01170-04012		BOLT	ﾎﾞﾙﾄ	4	[DPF]
35	01183-05010		BOLT	ﾎﾞﾙﾄ	5	[DPF]
36	02000-00004		WASHER	ﾜｯｼｬ	4	[DPF]
37	01185-08016		BOLT	ﾎﾞﾙﾄ	3	[DPF]
38	01185-06012		BOLT	ﾎﾞﾙﾄ	6	[DPF]
39	02000-00010		WASHER	ﾜｯｼｬ	2	[DPF]

FIG.27 POST & TAIL [TUE]

(F5022350) ﾎﾟｽﾄ&ﾃｲﾙ

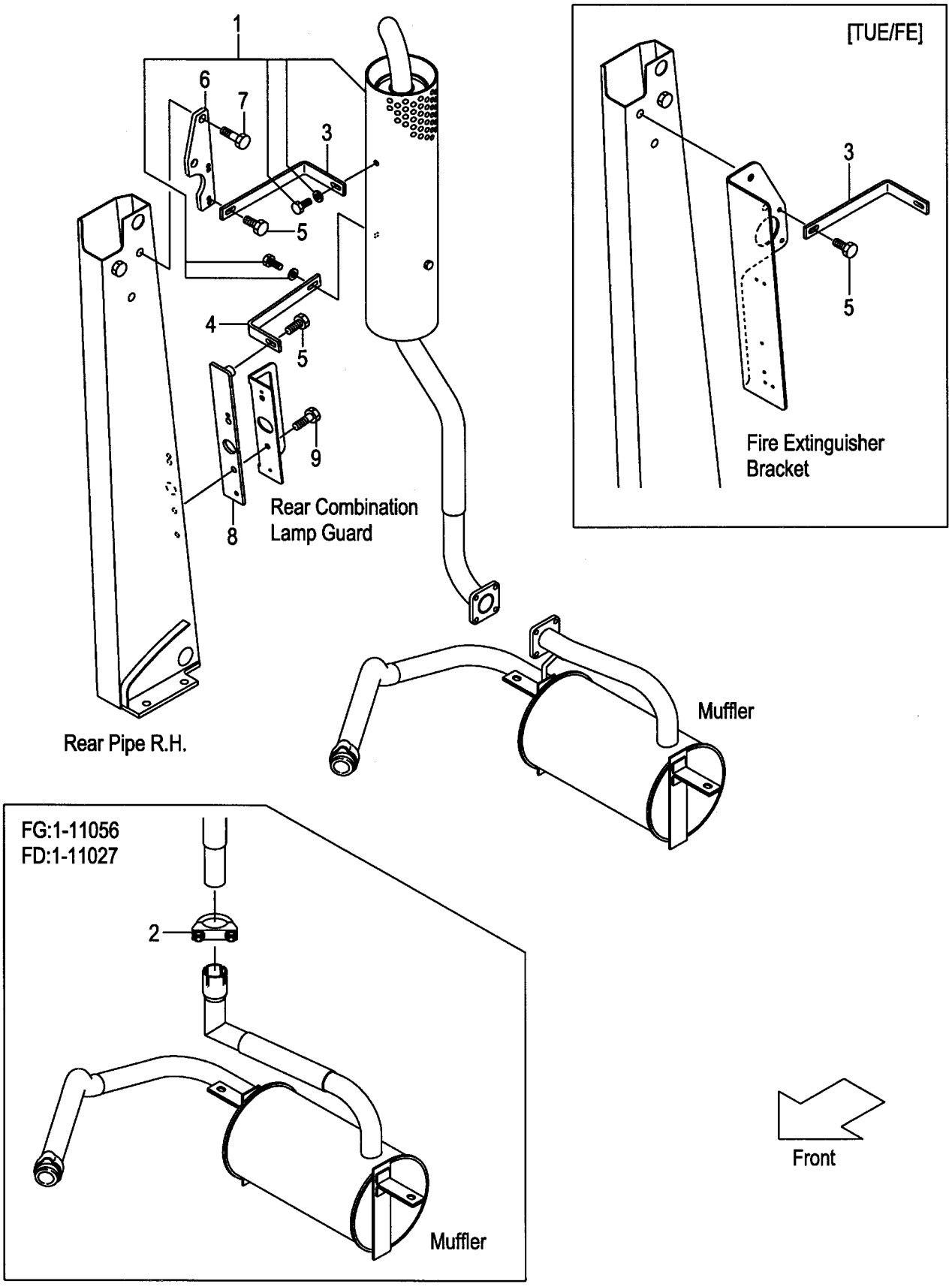

FIG.27
(F5022350)

A:FG20C17 FG20T17 FG25C17 FG25T17
B:FD20C17 FD20T17 FD25C17 FD25T17

Item No	Part No.	Mark	Description		Req'd	Remarks : Serial No.
1	537A0-80301		MUFFLER,VERTICAL	ﾏﾌﾗ	1	A:1-11056 B:1-11027 [TUE]
-	537A0-80302		MUFFLER,VERTICAL	ﾏﾌﾗ	1	A:11057- B:11028- [TUE]
2	234A2-30501		CLAMP,U-BOLT	ｸﾗﾝﾌﾟ	1	A:1-11056 B:1-11027 [TUE]
3	537A0-82001		STAY	ｽﾃｰ	1	[TUE]
4	537A0-82011		STAY	ｽﾃｰ	1	[TUE]
5	01185-08016		BOLT	ﾎﾞﾙﾄ	2	[TUE]
6	510F0-82032		BRACKET,STAY	ﾌﾞﾗｹｯﾄ	1	[TUE](WITHOUT TUE/FE)
7	01186-12045		BOLT	ﾎﾞﾙﾄ	2	[TUE](WITHOUT TUE/FE)
8	534A0-82101		BRACKET,STAY	ﾌﾞﾗｹｯﾄ	1	[TUE]
9	01183-08022		BOLT	ﾎﾞﾙﾄ	2	[TUE]

FIG.28 POST & TAIL [TUE]

(F5022360) ﾎﾟｽﾄ&ﾃｲﾙ

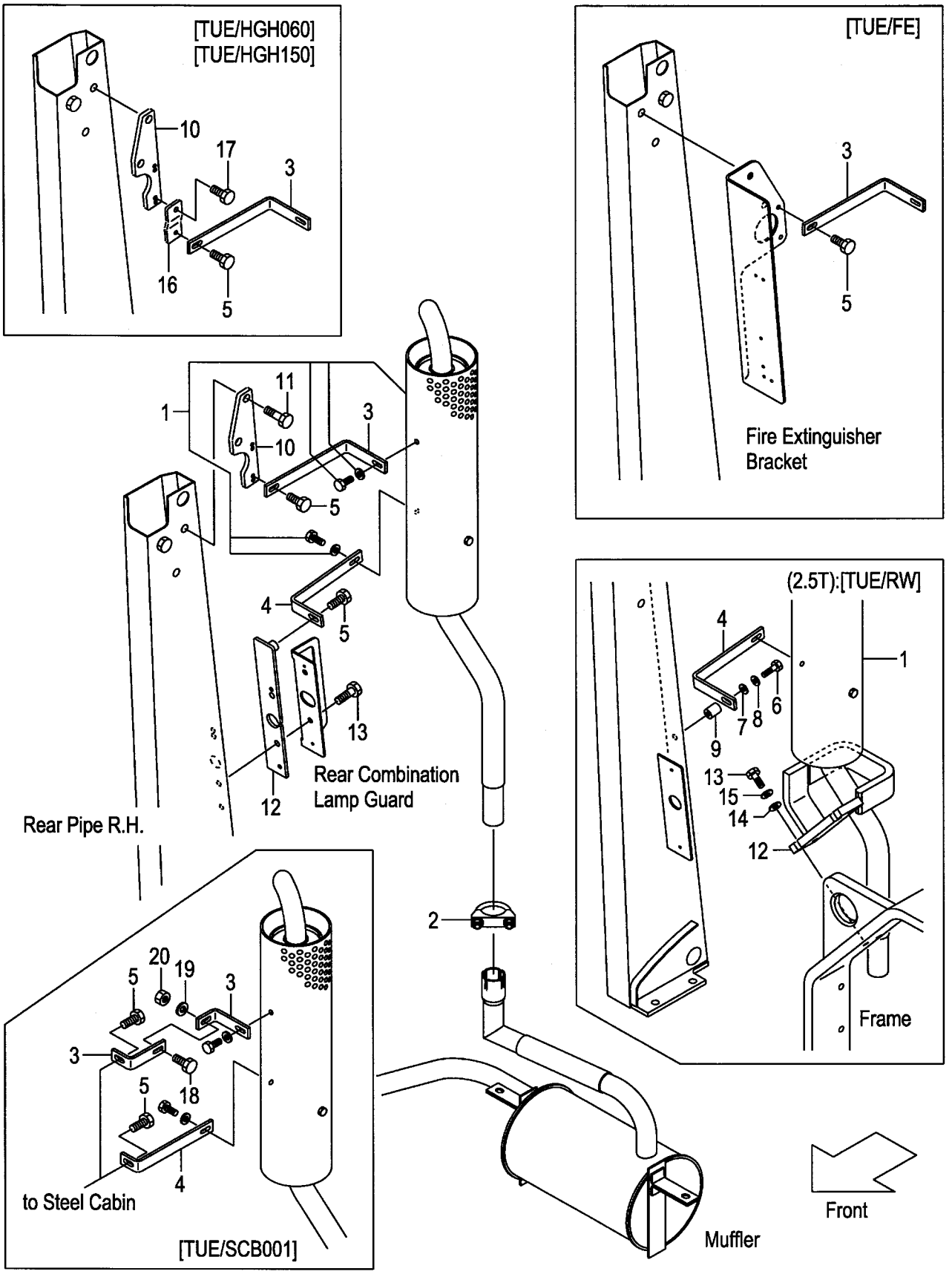

A:FG20C6 FG20T6:1-66998 D:FG25W6:1-66998 G:FD20W6:1-87031
B:FG25C6 FG25T6:1-66998 E:FD20C6 FD20T6:1-87031 H:FD25W6:1-87031
C:FG20W6:1-66998 F:FD25C6 FD25T6:1-87031

FIG.28
(F5022360)

Item No	Part No.	Mark	Description		Req'd	Remarks : Serial No.
1	537A0-80301		MUFFLER,VERTICAL	ﾏﾌﾗ	1	[TUE]
-	539C1-90501		MUFFLER,VERTICAL	ﾏﾌﾗ	1	B,D,F,H [TUE/RW]
2	234A2-30501		CLAMP,U-BOLT	ｸﾗﾝﾌﾟ	1	[TUE]
3	537A0-82001		STAY	ｽﾃｰ	1	[TUE]
-	524W3-92211		STAY	ｽﾃｰ	2	[TUE/SCB001]
-	539C1-90521		STAY	ｽﾃｰ	1	B,D,F,H [TUE/RW]
4	537A0-82011		STAY	ｽﾃｰ	1	[TUE]
-	514A0-82022		STAY	ｽﾃｰ	1	[TUE/SCB001]
-	514A0-82081		STAY	ｽﾃｰ	1	B,D,F,H [TUE/RW]
5	01185-08016		BOLT	ﾎﾞﾙﾄ	2	[TUE]
-	01185-08016		BOLT	ﾎﾞﾙﾄ	1	B,D,F,H [TUE/RW]
6	01100-08045		BOLT	ﾎﾞﾙﾄ	1	B,D,F,H [TUE/RW]
7	02000-00008		WASHER	ﾜｯｼｬ	1	B,D,F,H [TUE/RW]
8	02010-00008		WASHER	ﾜｯｼｬ	1	B,D,F,H [TUE/RW]
9	516G2-72071		SPACER	ｽﾍﾟｰｻ	1	B,D,F,H [TUE/RW]
10	510F0-82032		BRACKET,STAY	ﾌﾞﾗｹｯﾄ	1	[TUE] (WITHOUT TUE/SCB001,TUE/FE)
11	01186-12045		BOLT	ﾎﾞﾙﾄ	2	[TUE] (WITHOUT TUE/SCB001,TUE/FE)
12	534A0-82101		BRACKET,STAY	ﾌﾞﾗｹｯﾄ	1	[TUE](WITHOUT TUE/SCB001)
-	539C1-92501		GUARD	ｶﾞｰﾄﾞ	1	B,D,F,H [TUE/RW]
13	01183-08022		BOLT	ﾎﾞﾙﾄ	2	[TUE](WITHOUT TUE/SCB001)
-	01100-12045		BOLT	ﾎﾞﾙﾄ	4	B,D,F,H [TUE/RW]
14	02000-00012		WASHER	ﾜｯｼｬ	4	B,D,F,H [TUE/RW]
15	02010-00012		WASHER	ﾜｯｼｬ	4	B,D,F,H [TUE/RW]
16	514A0-82251		BRACKET,STAY	ﾌﾞﾗｹｯﾄ	1	[TUE/HGH060]
-	529F0-82101		BRACKET,STAY	ﾌﾞﾗｹｯﾄ	1	[TUE/HGH150]
17	01183-08016		BOLT	ﾎﾞﾙﾄ	1	[TUE/HGH060][TUE/HGH150]
18	01185-08030		BOLT	ﾎﾞﾙﾄ	1	[TUE/SCB001]
19	02000-00008		WASHER	ﾜｯｼｬ	1	[TUE/SCB001]
20	01400-00008		NUT	ﾅｯﾄ	1	[TUE/SCB001]

FIG.28A POST & TAIL [TUE]

(F5022361) ﾎﾟｽﾄ&ﾃｲﾙ

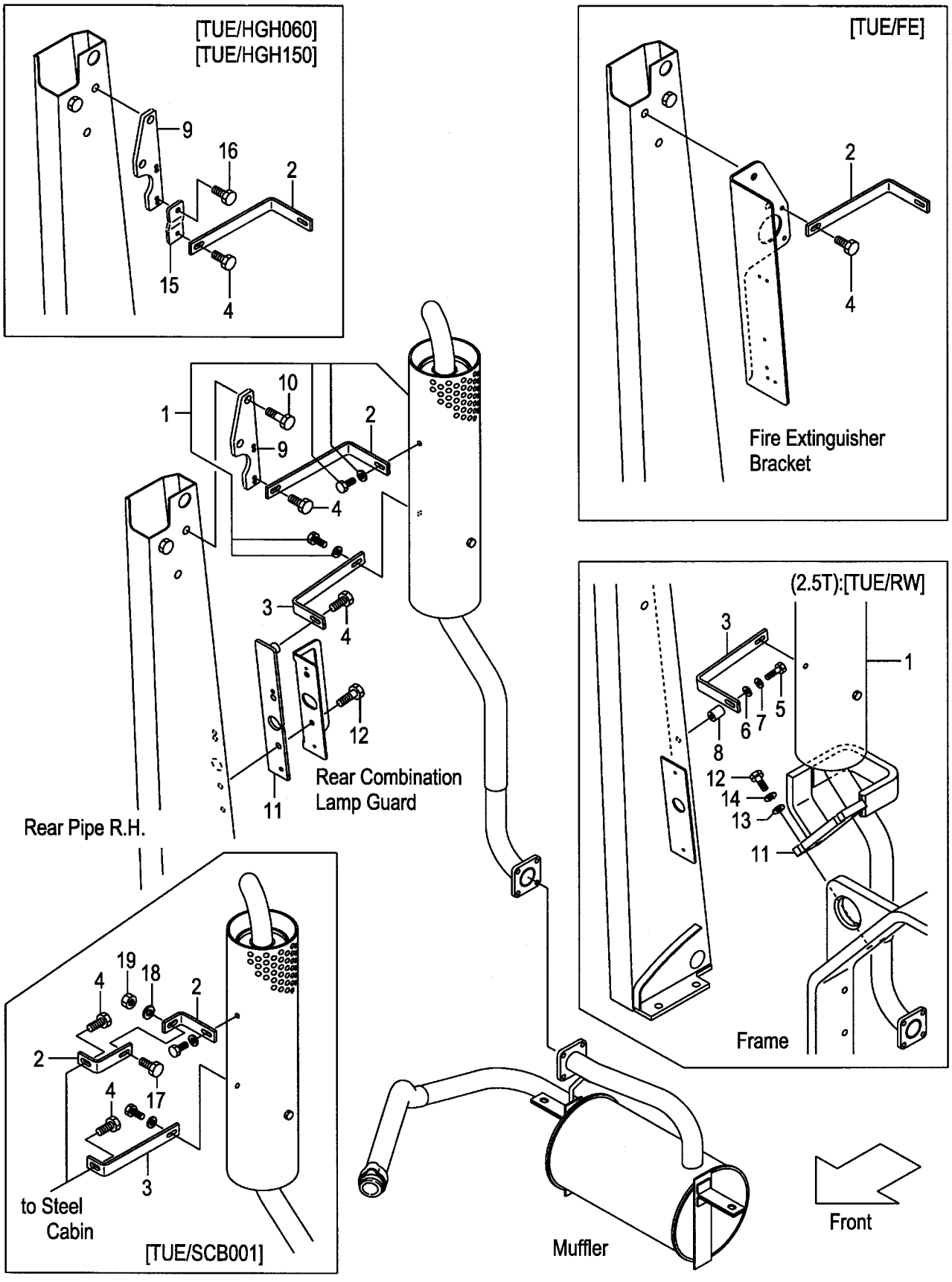

A:FG20C6 FG20T6:66999- D:FG25W6:66999- G:FD20W6:87032-
B:FG25C6 FG25T6:66999- E:FD20C6 FD20T6:87032- H:FD25W6:87032-
C:FG20W6:66999- F:FD25C6 FD25T6:87032-

FIG.28A
(F5022361)

Item No	Part No.	Mark	Description		Req'd	Remarks : Serial No.
1	537A0-80302		MUFFLER,VERTICAL	ﾏﾌﾗ	1	[TUE]
-	539C1-90502		MUFFLER,VERTICAL	ﾏﾌﾗ	1	B,D,F,H
						[TUE/RW]
2	537A0-82001		STAY	ｽﾃｰ	1	[TUE]
-	524W3-92211		STAY	ｽﾃｰ	2	[TUE/SCB001]
-	539C1-90521		STAY	ｽﾃｰ	1	B,D,F,H
						[TUE/RW]
3	537A0-82011		STAY	ｽﾃｰ	1	[TUE]
-	514A0-82022		STAY	ｽﾃｰ	1	[TUE/SCB001]
-	514A0-82081		STAY	ｽﾃｰ	1	B,D,F,H
						[TUE/RW]
4	01185-08016		BOLT	ﾎﾞﾙﾄ	2	[TUE]
-	01185-08016		BOLT	ﾎﾞﾙﾄ	1	B,D,F,H
						[TUE/RW]
5	01100-08045		BOLT	ﾎﾞﾙﾄ	1	B,D,F,H
						[TUE/RW]
6	02000-00008		WASHER	ﾜｯｼｬ	1	B,D,F,H
						[TUE/RW]
7	02010-00008		WASHER	ﾜｯｼｬ	1	B,D,F,H
						[TUE/RW]
8	516G2-72071		SPACER	ｽﾍﾟｰｻ	1	B,D,F,H
						[TUE/RW]
9	510F0-82032		BRACKET,STAY	ﾌﾞﾗｹｯﾄ	1	[TUE]
						(WITHOUT TUE/SCB001,TUE/FE)
10	01186-12045		BOLT	ﾎﾞﾙﾄ	2	[TUE]
						(WITHOUT TUE/SCB001,TUE/FE)
11	534A0-82101		BRACKET,STAY	ﾌﾞﾗｹｯﾄ	1	[TUE](WITHOUT TUE/SCB001)
-	539C1-92501		GUARD	ｶﾞｰﾄﾞ	1	B,D,F,H
						[TUE/RW]
12	01183-08022		BOLT	ﾎﾞﾙﾄ	2	[TUE](WITHOUT TUE/SCB001)
-	01100-12045		BOLT	ﾎﾞﾙﾄ	4	B,D,F,H
						[TUE/RW]
13	02000-00012		WASHER	ﾜｯｼｬ	4	B,D,F,H
						[TUE/RW]
14	02010-00012		WASHER	ﾜｯｼｬ	4	B,D,F,H
						[TUE/RW]
15	514A0-82251		BRACKET,STAY	ﾌﾞﾗｹｯﾄ	1	[TUE/HGH060]
-	529F0-82101		BRACKET,STAY	ﾌﾞﾗｹｯﾄ	1	[TUE/HGH150]
16	01183-08016		BOLT	ﾎﾞﾙﾄ	1	[TUE/HGH060][TUE/HGH150]
17	01185-08030		BOLT	ﾎﾞﾙﾄ	1	[TUE/SCB001]
18	02000-00008		WASHER	ﾜｯｼｬ	1	[TUE/SCB001]
19	01400-00008		NUT	ﾅｯﾄ	1	[TUE/SCB001]

FIG.29 POST & TAIL [TUE/(EXB,EXC,EXE,EXK,EXN)]

(F5022370) ﾎﾟｽﾄ&ﾃｲﾙ

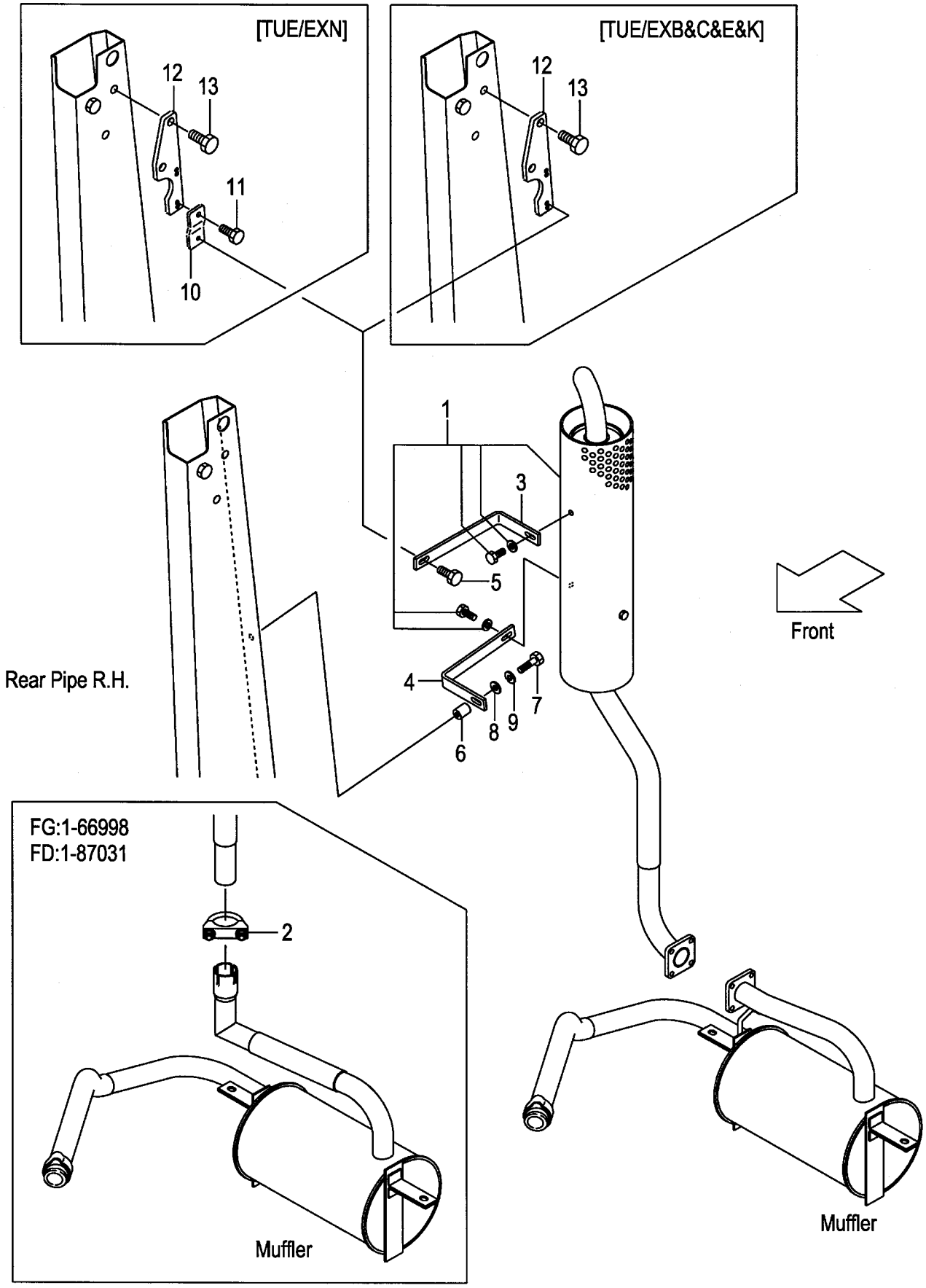

FIG.29
(F5022370)

A:FG20C6 FG20T6 FG25C6 FG25T6
B:FD20C6 FD20T6 FD25C6 FD25T6

Item No	Part No.	Mark	Description		Req'd	Remarks : Serial No.
1	537A0-80301		MUFFLER,VERTICAL	ﾏﾌﾗ	1	A:1-66998 B:1-87031 [TUE/EXB&C&E&K&N]
-	537A0-80302		MUFFLER,VERTICAL	ﾏﾌﾗ	1	A:66999- B:87032- [TUE/EXB&C&E&K&N]
2	234A2-30501		CLAMP,U-BOLT	ｸﾗﾝﾌﾟ	1	A:1-66998 B:1-87031 [TUE/EXB&C&E&K&N]
3	537A0-82001		STAY	ｽﾃｰ	1	[TUE/EXB&C&E&K&N]
4	537A0-82011		STAY	ｽﾃｰ	1	[TUE/EXB&C&E&K&N]
5	01185-08016		BOLT	ﾎﾞﾙﾄ	1	[TUE/EXB&C&E&K&N]
6	516G2-72071		SPACER	ｽﾍﾟｰｻ	1	[TUE/EXB&C&E&K&N]
7	01100-08045		BOLT	ﾎﾞﾙﾄ	1	[TUE/EXB&C&E&K&N]
8	02000-00008		WASHER	ﾜｯｼｬ	1	[TUE/EXB&C&E&K&N]
9	02010-00008		WASHER	ﾜｯｼｬ	1	[TUE/EXB&C&E&K&N]
10	514A0-82251		BRACKET,STAY	ﾌﾞﾗｹｯﾄ	1	[TUE/EXN]
11	01183-08016		BOLT	ﾎﾞﾙﾄ	1	[TUE/EXN]
12	510F0-82032		BRACKET,STAY	ﾌﾞﾗｹｯﾄ	1	[TUE/EXB&C&E&K&N]
13	01186-12045		BOLT	ﾎﾞﾙﾄ	2	[TUE/EXB&C&E&K&N]

FIG.30 WIRE HARNESS (DIESEL):[DPF]

(F5022380) ワイヤハーネス

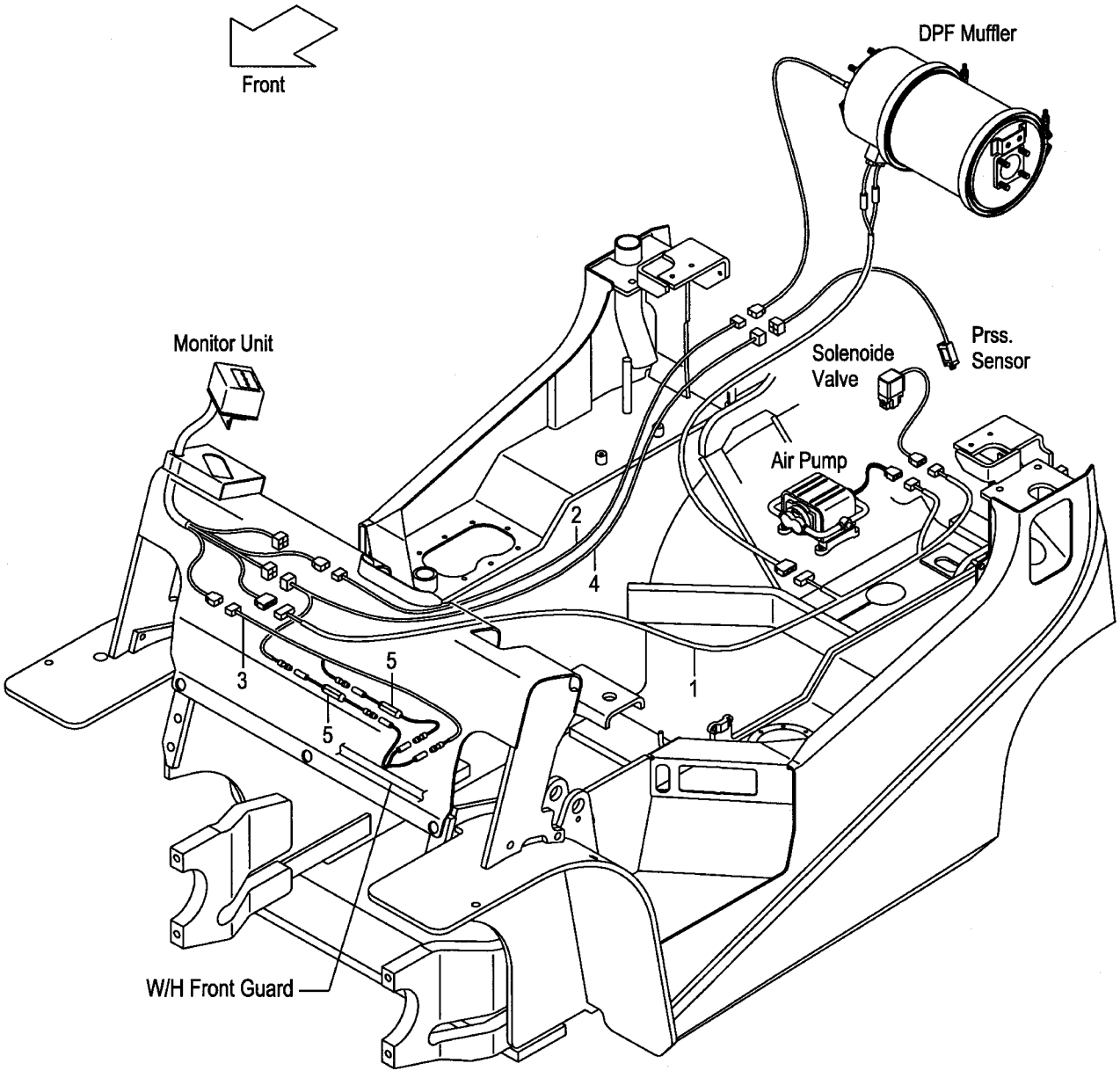

FIG.30

(F5022380)

A:FD20C6 FD20T6 FD25C6 FD25T6 FD20W6 FD25W6

Item No	Part No.	Mark	Description	Req'd	Remarks : Serial No.
1	539A5-92441		WIRE-HARNESS ﾜｲﾔﾊｰﾈｽ	1	[DPF] (MONITOR-HEATER&PUMP&VALVE)
2	509P5-92451		WIRE-HARNESS ﾜｲﾔﾊｰﾈｽ	1	[DPF](MONITOR-TEMP SENSOR)
3	509M5-92381		WIRE-HARNESS ﾜｲﾔﾊｰﾈｽ	1	[DPF](MONITOR-OPT TERMINAL)
4	509P5-92471		WIRE-HARNESS ﾜｲﾔﾊｰﾈｽ	1	[DPF] (MONITOR-PRESSURE SENSOR)
5	509P5-92481		WIRE-HARNESS ﾜｲﾔﾊｰﾈｽ	2	[DPF](FUSE BOX)

FIG.31 FRONT TUBE & JOINT (DIESEL):[DPF]

(F5022390) フロントチューブ&ジョイント

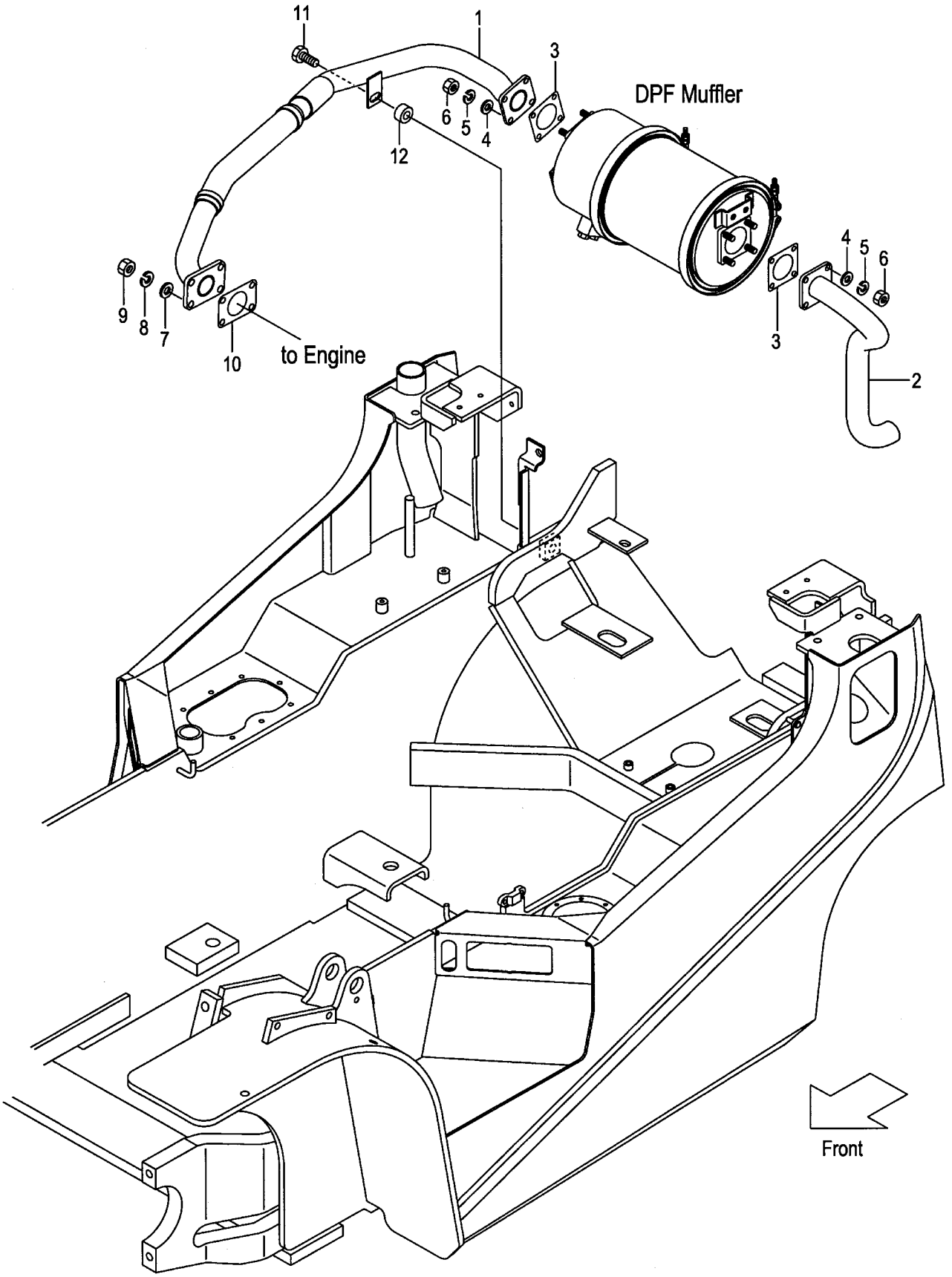

FIG.31
(F5022390)

A:FD20C6 FD20T6 FD25C6 FD25T6 FD20W6 FD25W6

Item No	Part No.	Mark	Description		Req'd	Remarks : Serial No.
1	538F5-92321		TUBE,FRONT	ﾁｭｰﾌﾞ	1	[DPF]
2	539A5-92341		TUBE,TAIL	ﾁｭｰﾌﾞ	1	[DPF]
3	509P5-92351		GASKET	ｶﾞｽｹｯﾄ	2	[DPF]
4	02001-00008		WASHER	ﾜｯｼｬ	8	[DPF]
5	02013-00008		WASHER	ﾜｯｼｬ	8	[DPF]
6	01400-30008		NUT	ﾅｯﾄ	8	[DPF]
7	02000-00010		WASHER	ﾜｯｼｬ	4	[DPF]
8	02010-00010		WASHER	ﾜｯｼｬ	4	[DPF]
9	01400-20010		NUT	ﾅｯﾄ	4	[DPF]
10	224G2-32011		GASKET	ｶﾞｽｹｯﾄ	1	[DPF]
11	01182-10030		BOLT	ﾎﾞﾙﾄ	1	[DPF]
12	22252-32241		RUBBER	ﾗﾊﾞｰ	1	[DPF]

FIG.32 COMBINATION METER (GASOLINE)

(F5022410) コンビネーションメータ

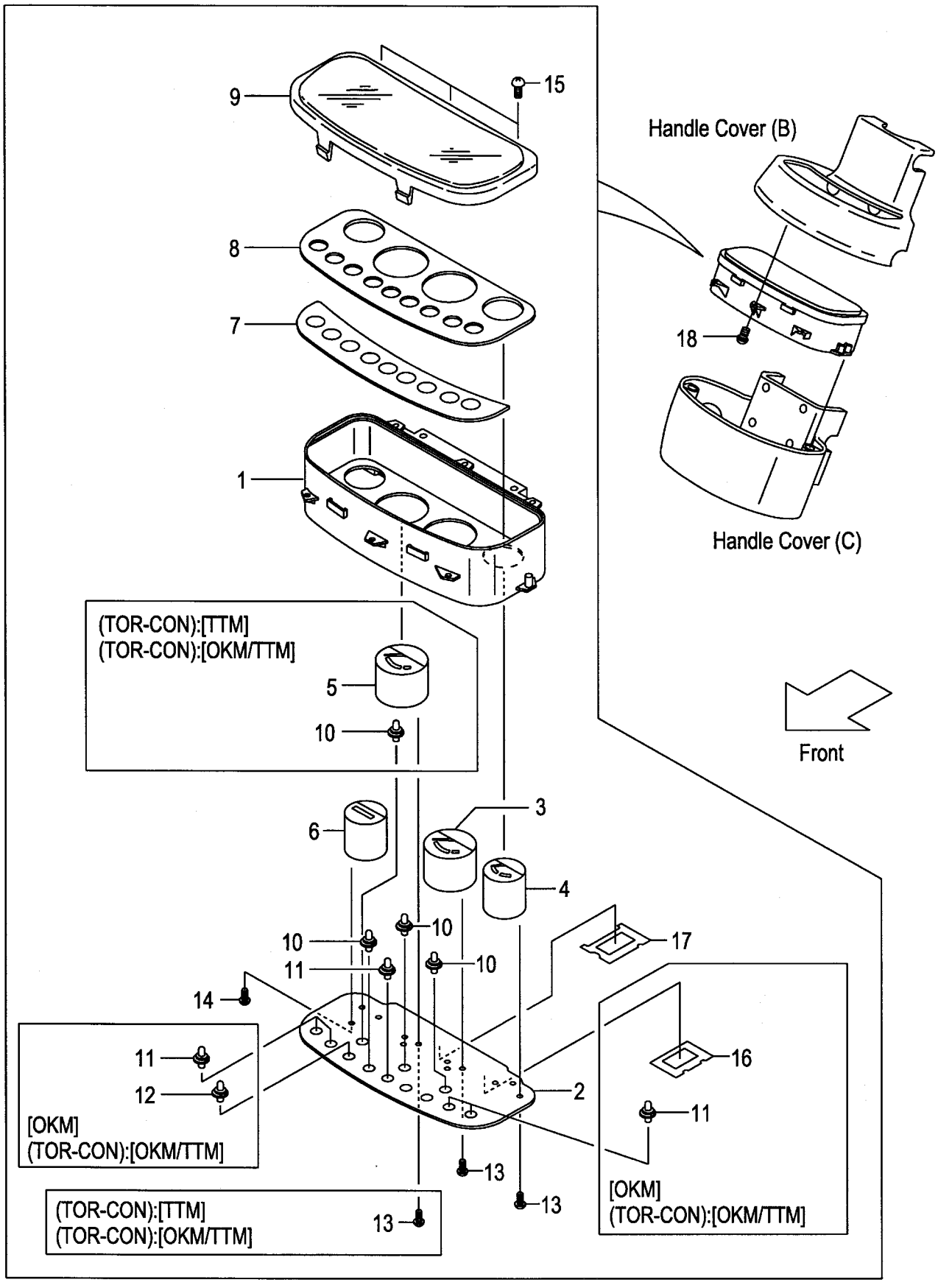

A:FG20C17 FG25C17 D:FG20T6 FG25T6
B:FG20T17 FG25T17 E:FG20W6 FG25W6
C:FG20C6 FG25C6

FIG.32
(F5022410)

Item No	Part No.	Mark	Description		Req'd	Remarks : Serial No.
A1	216G2-40301		METER-ASSY,COMBINATION	ﾒｰﾀｱｯｾﾝ	1	INC.1-4,6-11,13-15,17
-	516G6-20101		METER-ASSY,COMBINATION	ﾒｰﾀｱｯｾﾝ	1	[OKM] INC.1-4,6-17
-	516H8-80101		METER-ASSY,COMBINATION	ﾒｰﾀｱｯｾﾝ	1	B,D
						[TTM] INC.1-11,13-15,17
-	516G6-20201		METER-ASSY,COMBINATION	ﾒｰﾀｱｯｾﾝ	1	B,D
						[OKM/TTM] INC.1-17
1	216G2-43201		HOUSING	ﾊｳｼﾞﾝｸﾞ	1	
2	216G2-43211		CIRCUIT,PRINTED	ｻｰｷｯﾄ	1	
-	516G6-22051		CIRCUIT,PRINTED	ｻｰｷｯﾄ	1	[OKM]
-	516G6-22051		CIRCUIT,PRINTED	ｻｰｷｯﾄ	1	B,D
						[OKM/TTM]
3	216G2-43231		GAUGE,WATER-TEMP	ｹﾞｰｼﾞ	1	
4	216G2-43241		GAUGE,FUEL	ｹﾞｰｼﾞ	1	
5	216G2-43251		GAUGE,OIL-TEMP	ｹﾞｰｼﾞ	1	B,D
						[TTM][OKM/TTM]
6	216G2-43261		METER,HOUR	ﾒｰﾀ	1	
7	216G2-43271		LENS,WARNING	ﾚﾝｽﾞ	1	
8	216G2-43281		PLATE,SHADOW	ﾌﾟﾚｰﾄ	1	
-	216G2-43291		PLATE,SHADOW	ﾌﾟﾚｰﾄ	1	B,D
						[TTM][OKM/TTM]
9	216G2-43301		COVER,FRONT	ｶﾊﾞｰ	1	
10	222A2-42331		SOCKET & BULB	ｿｹｯﾄ&ﾊﾞﾙﾌﾞ	3	(14V/1.4W)
-	222A2-42331		SOCKET & BULB	ｿｹｯﾄ&ﾊﾞﾙﾌﾞ	4	B,D
						[TTM][OKM/TTM](14V/1.4W)
11	222A2-42401		SOCKET & BULB	ｿｹｯﾄ&ﾊﾞﾙﾌﾞ	1	(13.5V/2W)
-	222A2-42401		SOCKET & BULB	ｿｹｯﾄ&ﾊﾞﾙﾌﾞ	5	[OKM](13.5V/2W)
-	222A2-42401		SOCKET & BULB	ｿｹｯﾄ&ﾊﾞﾙﾌﾞ	5	B,D
						[OKM/TTM](13.5V/2W)
12	222A2-42341		SOCKET & BULB	ｿｹｯﾄ&ﾊﾞﾙﾌﾞ	1	[OKM](14V/3W)
-	222A2-42341		SOCKET & BULB	ｿｹｯﾄ&ﾊﾞﾙﾌﾞ	1	B,D
						[OKM/TTM](14V/3W)
13	229F2-42421		SCREW	ｽｸﾘｭ	6	
-	229F2-42421		SCREW	ｽｸﾘｭ	9	B,D
						[TTM][OKM/TTM]
14	229F2-42431		SCREW	ｽｸﾘｭ	3	
15	222A2-42361		SCREW	ｽｸﾘｭ	3	
16	516G6-22031		GASKET	ｶﾞｽｹｯﾄ	1	[OKM]
-	516G6-22031		GASKET	ｶﾞｽｹｯﾄ	1	B,D
						[OKM/TTM]
17	216G2-43161		GASKET	ｶﾞｽｹｯﾄ	1	
18	222A2-42031		SCREW	ｽｸﾘｭ	5	

FIG.33 COMBINATION METER (DIESEL)

(F5022420) コンビネーションメータ

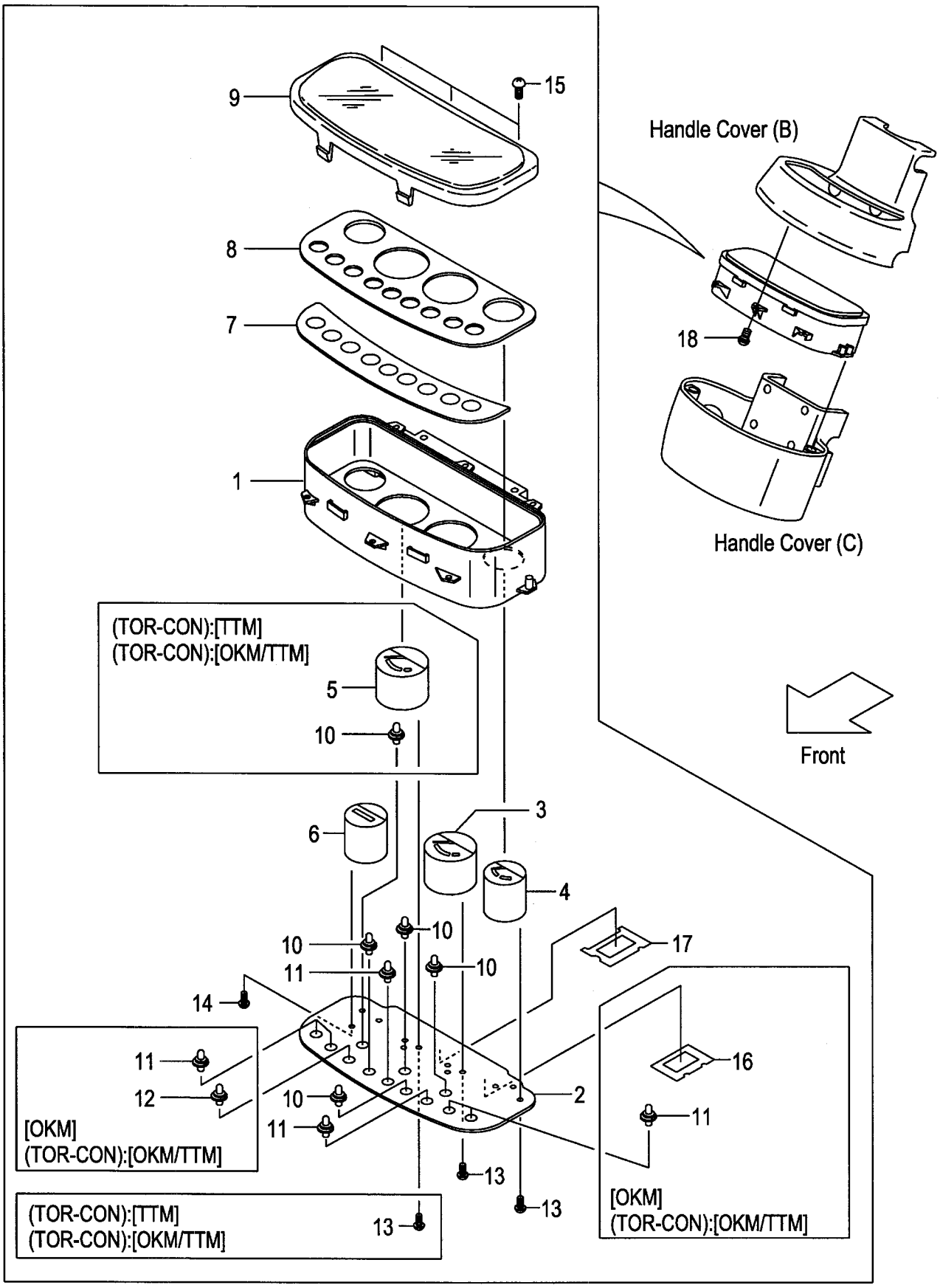

A:FD20C17 FD25C17 D:FD20T6 FD25T6
B:FD20T17 FD25T17 E:FD20W6 FD25W6
C:FD20C6 FD25C6

FIG.33
(F5022420)

Item No	Part No.	Mark	Description		Req'd	Remarks : Serial No.
A1	217G2-40301		METER-ASSY,COMBINATION	ﾒｰﾀｱｯｾﾝ	1	INC.1-4,6-11,13-15,17
-	517G6-20101		METER-ASSY,COMBINATION	ﾒｰﾀｱｯｾﾝ	1	[OKM] INC.1-4,6-17
-	517H8-80101		METER-ASSY,COMBINATION	ﾒｰﾀｱｯｾﾝ	1	B,D
						[TTM] INC.1-11,13-15,17
-	517G6-20201		METER-ASSY,COMBINATION	ﾒｰﾀｱｯｾﾝ	1	B,D
						[OKM/TTM] INC.1-17
1	216G2-43201		HOUSING	ﾊｳｼﾞﾝｸﾞ	1	
2	216G2-43221		CIRCUIT,PRINTED	ｻｰｷｯﾄ	1	
-	516G6-22051		CIRCUIT,PRINTED	ｻｰｷｯﾄ	1	[OKM]
-	516G6-22051		CIRCUIT,PRINTED	ｻｰｷｯﾄ	1	B,D
						[OKM/TTM]
3	216G2-43231		GAUGE,WATER-TEMP	ｹﾞｰｼﾞ	1	
4	216G2-43241		GAUGE,FUEL	ｹﾞｰｼﾞ	1	
5	216G2-43251		GAUGE,OIL-TEMP	ｹﾞｰｼﾞ	1	B,D
						[TTM][OKM/TTM]
6	216G2-43261		METER,HOUR	ﾒｰﾀ	1	
7	216G2-43271		LENS,WARNING	ﾚﾝｽﾞ	1	
8	216G2-43281		PLATE,SHADOW	ﾌﾟﾚｰﾄ	1	
-	216G2-43291		PLATE,SHADOW	ﾌﾟﾚｰﾄ	1	B,D
						[TTM][OKM/TTM]
9	216G2-43301		COVER,FRONT	ｶﾊﾞｰ	1	
10	222A2-42331		SOCKET & BULB	ｿｹｯﾄ&ﾊﾞﾙﾌﾞ	4	(14V/1.4W)
-	222A2-42331		SOCKET & BULB	ｿｹｯﾄ&ﾊﾞﾙﾌﾞ	5	B,D
						[TTM][OKM/TTM](14V/1.4W)
11	222A2-42401		SOCKET & BULB	ｿｹｯﾄ&ﾊﾞﾙﾌﾞ	2	(13.5V/2W)
-	222A2-42401		SOCKET & BULB	ｿｹｯﾄ&ﾊﾞﾙﾌﾞ	6	[OKM](13.5V/2W)
-	222A2-42401		SOCKET & BULB	ｿｹｯﾄ&ﾊﾞﾙﾌﾞ	6	B,D
						[OKM/TTM](13.5V/2W)
12	222A2-42341		SOCKET & BULB	ｿｹｯﾄ&ﾊﾞﾙﾌﾞ	1	[OKM](14V/3W)
-	222A2-42341		SOCKET & BULB	ｿｹｯﾄ&ﾊﾞﾙﾌﾞ	1	B,D
						[OKM/TTM](14V/3W)
13	229F2-42421		SCREW	ｽｸﾘｭ	6	
-	229F2-42421		SCREW	ｽｸﾘｭ	9	B,D
						[TTM][OKM/TTM]
14	229F2-42431		SCREW	ｽｸﾘｭ	3	
15	222A2-42361		SCREW	ｽｸﾘｭ	3	
16	516G6-22031		GASKET	ｶﾞｽｹｯﾄ	1	[OKM]
-	516G6-22031		GASKET	ｶﾞｽｹｯﾄ	1	B,D
						[OKM/TTM]
17	216G2-43161		GASKET	ｶﾞｽｹｯﾄ	1	
18	222A2-42031		SCREW	ｽｸﾘｭ	5	

FIG.34 COMBINATION METER (GASOLINE):[EECG][EECLP]

(F50224B0) コンビネーションメータ

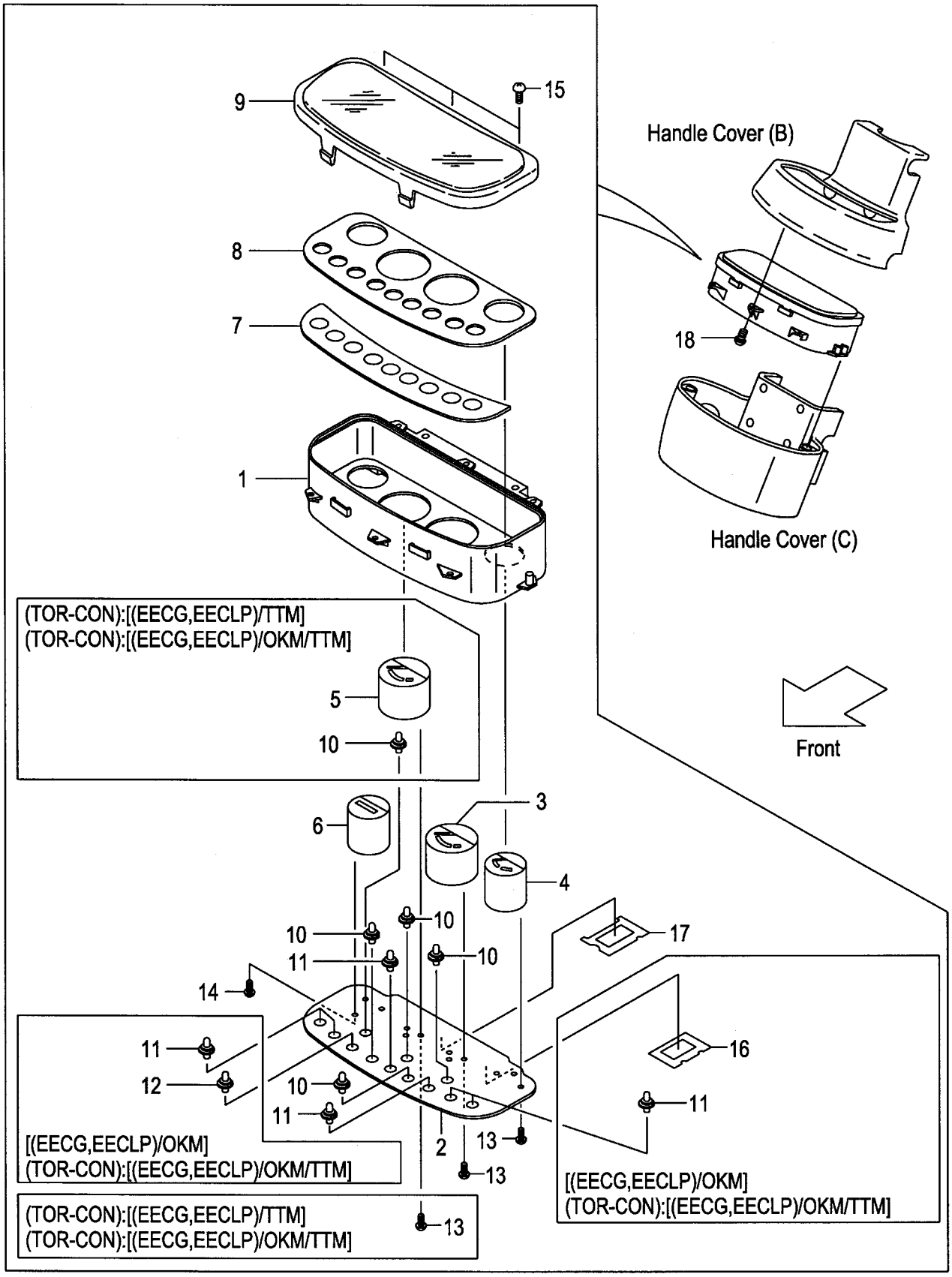

A:FG20C6 FG25C6
B:FG20T6 FG25T6

Item No	Part No.	Mark	Description		Req'd	Remarks : Serial No.
A1	531B2-70251		METER-ASSY,COMBINATION	ﾒｰﾀｱｯｾﾝ	1	[EECG][EECLP] INC.1-4,6-11,13-15,17
-	531B2-70271		METER-ASSY,COMBINATION	ﾒｰﾀｱｯｾﾝ	1	[EECG/OKM][EECLP/OKM] INC.1-4,6-17
-	531B2-70261		METER-ASSY,COMBINATION	ﾒｰﾀｱｯｾﾝ	1	B [EECG/TTM][EECLP/TTM] INC.1-11,13-15,17
-	531B2-70281		METER-ASSY,COMBINATION	ﾒｰﾀｱｯｾﾝ	1	B [EECG/OKM/TTM][EECLP/OKM/TTM] INC.1-17
1	216G2-43201		HOUSING	ﾊｳｼﾞﾝｸﾞ	1	[EECG][EECLP]
2	216G2-43221		CIRCUIT,PRINTED	ｻｰｷｯﾄ	1	[EECG][EECLP]
-	516G6-22051		CIRCUIT,PRINTED	ｻｰｷｯﾄ	1	[EECG/OKM][EECLP/OKM]
-	516G6-22051		CIRCUIT,PRINTED	ｻｰｷｯﾄ	1	B [EECG/OKM/TTM][EECLP/OKM/TTM]
3	216G2-43231		GAUGE,WATER-TEMP	ｹﾞｰｼﾞ	1	[EECG][EECLP]
4	216G2-43241		GAUGE,FUEL	ｹﾞｰｼﾞ	1	[EECG][EECLP]
5	216G2-43251		GAUGE,OIL-TEMP	ｹﾞｰｼﾞ	1	B [EECG/TTM][EECLP/TTM] [EECG/OKM/TTM][EECLP/OKM/TTM]
6	216G2-43261		METER,HOUR	ﾒｰﾀ	1	[EECG][EECLP]
7	NO PART NO.		LENS,WARNING	ﾚﾝｽﾞ	1	[EECG][EECLP]
8	216G2-43281		PLATE,SHADOW	ﾌﾟﾚｰﾄ	1	[EECG][EECLP]
-	216G2-43291		PLATE,SHADOW	ﾌﾟﾚｰﾄ	1	B [EECG/TTM][EECLP/TTM] [EECG/OKM/TTM][EECLP/OKM/TTM]
9	216G2-43301		COVER,FRONT	ｶﾊﾞｰ	1	[EECG][EECLP]
10	222A2-42331		SOCKET & BULB	ｿｹｯﾄ&ﾊﾞﾙﾌﾞ	4	[EECG][EECLP](14V/1.4W)
-	222A2-42331		SOCKET & BULB	ｿｹｯﾄ&ﾊﾞﾙﾌﾞ	5	B [EECG/TTM][EECLP/TTM] (14V/1.4W)
-	222A2-42331		SOCKET & BULB	ｿｹｯﾄ&ﾊﾞﾙﾌﾞ	5	B [EECG/OKM/TTM][EECLP/OKM/TTM] (14V/1.4W)
11	222A2-42401		SOCKET & BULB	ｿｹｯﾄ&ﾊﾞﾙﾌﾞ	2	[EECG][EECLP](13.5V/2W)
-	222A2-42401		SOCKET & BULB	ｿｹｯﾄ&ﾊﾞﾙﾌﾞ	6	[EECG/OKM][EECLP/OKM] (13.5V/2W)
-	222A2-42401		SOCKET & BULB	ｿｹｯﾄ&ﾊﾞﾙﾌﾞ	6	B [EECG/OKM/TTM][EECLP/OKM/TTM] (13.5V/2W)
12	222A2-42341		SOCKET & BULB	ｿｹｯﾄ&ﾊﾞﾙﾌﾞ	1	[EECG/OKM][EECLP/OKM](14V/3W)
-	222A2-42341		SOCKET & BULB	ｿｹｯﾄ&ﾊﾞﾙﾌﾞ	1	B [EECG/OKM/TTM][EECLP/OKM/TTM] (14V/3W)
13	229F2-42421		SCREW	ｽｸﾘｭ	6	[EECG][EECLP]
-	229F2-42421		SCREW	ｽｸﾘｭ	9	B [EECG/TTM][EECLP/TTM] [EECG/OKM/TTM][EECLP/OKM/TTM]
14	229F2-42431		SCREW	ｽｸﾘｭ	3	[EECG][EECLP]
15	222A2-42361		SCREW	ｽｸﾘｭ	3	[EECG][EECLP]

FIG.34 COMBINATION METER (GASOLINE):[EECG][EECLP]

(F50224B0) コンビネーションメータ

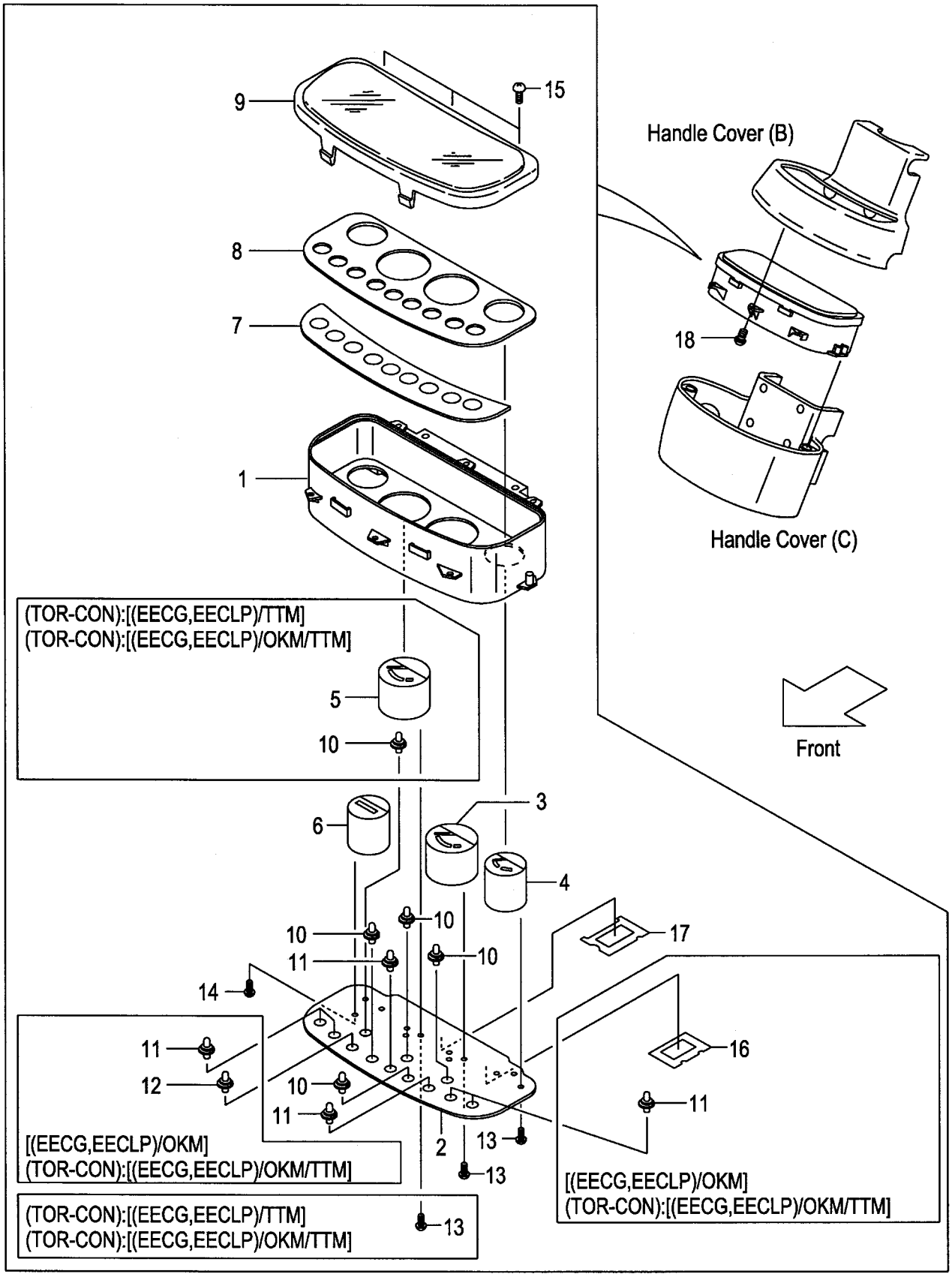

A:FG20C6 FG25C6
B:FG20T6 FG25T6

FIG.34
(F50224B0)

Item No	Part No.	Mark	Description		Req'd	Remarks : Serial No.
16	516G6-22031		GASKET	ｶﾞｽｹｯﾄ	1	[EECG/OKM][EECLP/OKM]
-	516G6-22031		GASKET	ｶﾞｽｹｯﾄ	1	B [EECG/OKM/TTM][EECLP/OKM/TTM]
17	216G2-43161		GASKET	ｶﾞｽｹｯﾄ	1	[EECG][EECLP]
18	222A2-42031		SCREW	ｽｸﾘｭ	5	[EECG][EECLP]

FIG.35 STEERING SHAFT COVER (CLUTCH)(OIL CLUTCH)

(F5022430) ステアリング゛シャフトカバ゛ー

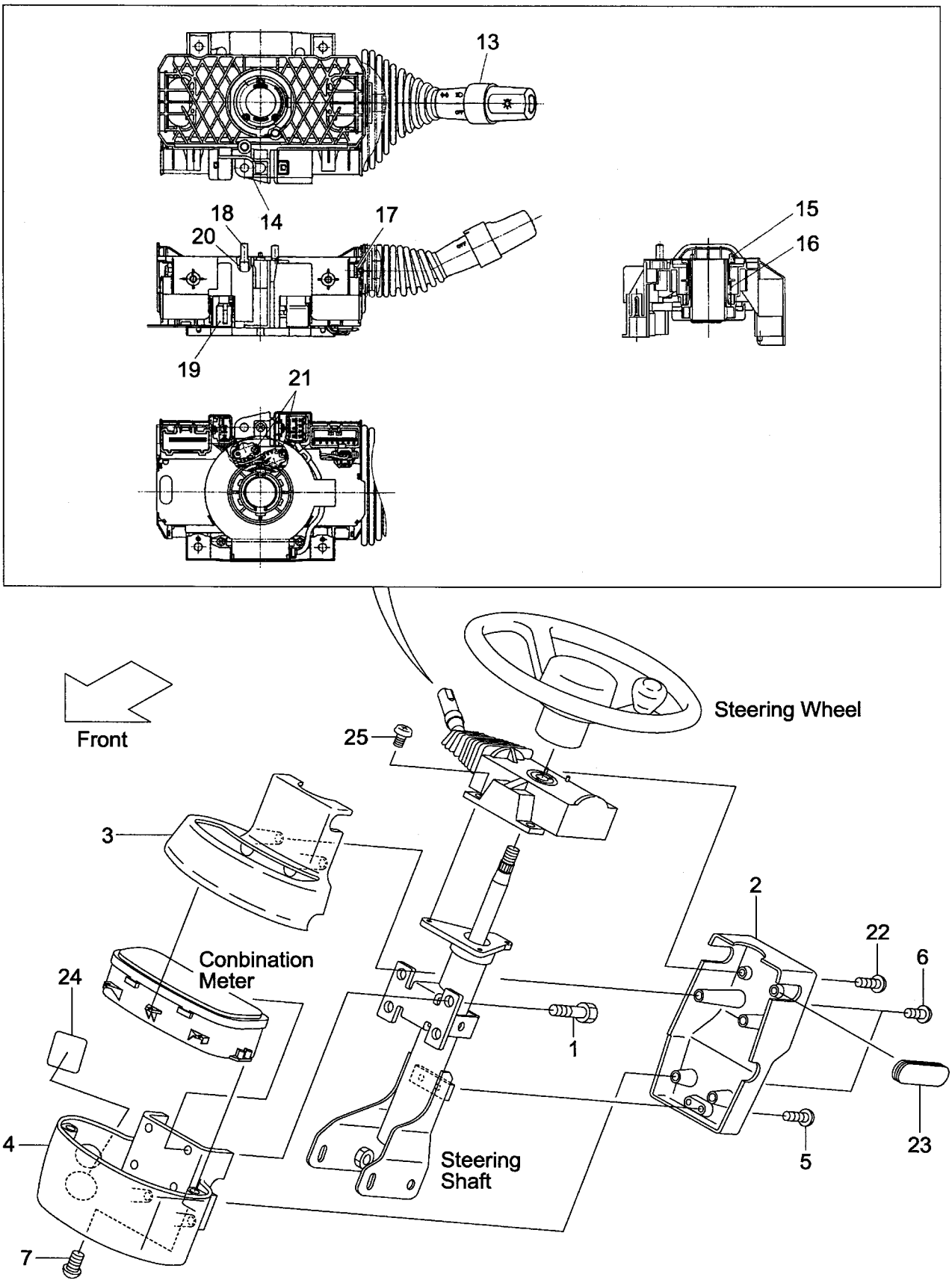

A:FG20C17 FG25C17 D:FG20W6 G:FD20C6 K:FD25W6
B:FG20C6 E:FG25W6 H:FD25C6
C:FG25C6 F:FD20C17 FD25C17 J:FD20W6

FIG.35
(F5022430)

Item No	Part No.	Mark	Description		Req'd	Remarks : Serial No.
1	01185-06016		BOLT	ﾎﾞﾙﾄ	4	
2	239A4-12501		COVER,HANDLE,A	ｶﾊﾞｰ	1	
3	239A4-12511		COVER,HANDLE,B	ｶﾊﾞｰ	1	
4	239A4-12521		COVER,HANDLE,C	ｶﾊﾞｰ	1	
-	539A7-72001		COVER,HANDLE,C	ｶﾊﾞｰ	1	[SWD]
-	536K6-02271		COVER,HANDLE,C	ｶﾊﾞｰ	1	C,E
						[CNG]
5	214A6-42771		SCREW	ｽｸﾘｭ	2	
6	222A2-42031		SCREW	ｽｸﾘｭ	4	
7	216G4-12091		SCREW	ｽｸﾘｭ	2	
8	04913-11200	+	BAND	ﾊﾞﾝﾄﾞ	1	
9	216G2-42131	+	BAND	ﾊﾞﾝﾄﾞ	14	
10	04913-10100	+	BAND	ﾊﾞﾝﾄﾞ	6	
11	04913-11100	+	BAND	ﾊﾞﾝﾄﾞ	2	
12	04913-10200	+	BAND	ﾊﾞﾝﾄﾞ	2	
A1	239A2-40501		SWITCH-ASSY,COMBINATION	ｽｲｯﾁｱｯｾﾝ	1	INC.13-21
13	280C2-42331		SWITCH,TURN-SIGNAL	ｽｲｯﾁ	1	
14	NO PART NO.	#	BODY	ﾎﾞﾃﾞｨ	1	
15	NO PART NO.	#	CAM,CANCEL,RH	ｶﾑ	1	
16	NO PART NO.	#	SPRING	ｽﾌﾟﾘﾝｸﾞ	1	
17	NO PART NO.	#	SCREW	ｽｸﾘｭ	4	
18	280C2-42351		CONTACT,HORN	ｺﾝﾀｸﾄ	2	
19	NO PART NO.	#	CODE,CP-HORN	ｺｰﾄﾞ	1	
20	NO PART NO.	#	SPRING	ｽﾌﾟﾘﾝｸﾞ	2	
21	NO PART NO.	#	SCREW	ｽｸﾘｭ	2	
22	209K2-43001		SCREW	ｽｸﾘｭ	2	
23	239A4-12541		GROMMET,HANDLE-COVER	ｸﾞﾛﾒｯﾄ	1	
24	229F6-42201		SEAL,PANEL-COVER,A	ｼｰﾙ	1	
25	01033-05014		SCREW	ｽｸﾘｭ	3	

FIG.36 STEERING SHAFT COVER (TOR-CON)

(F5022440) ｽﾃｱﾘﾝｸﾞｼｬﾌﾄｶﾊﾞｰ

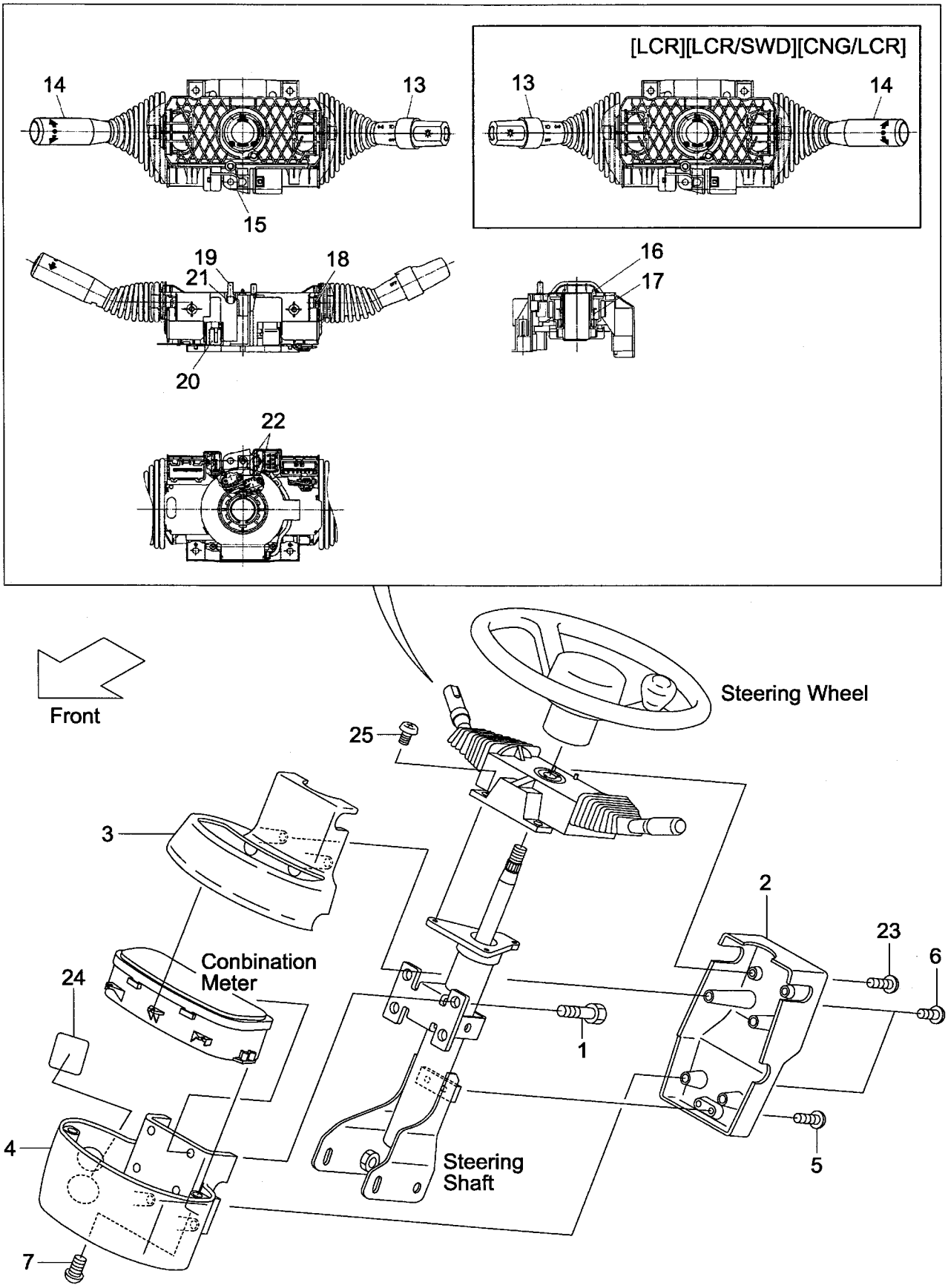

A:FG20T17 FG25T17 D:FD20T17 FD25T17
B:FG20T6 E:FD20T6
C:FG25T6 F:FD25T6

FIG.36
(F5022440)

Item No	Part No.	Mark	Description		Req'd	Remarks : Serial No.
1	01185-06016		BOLT	ﾎﾞﾙﾄ	4	
2	239A4-12501		COVER,HANDLE,A	ｶﾊﾞｰ	1	
3	239A4-12511		COVER,HANDLE,B	ｶﾊﾞｰ	1	
4	239A4-12521		COVER,HANDLE,C	ｶﾊﾞｰ	1	
-	539A7-72001		COVER,HANDLE,C	ｶﾊﾞｰ	1	[SWD][LCR/SWD]
-	536K6-02271		COVER,HANDLE,C	ｶﾊﾞｰ	1	C
						[CNG][CNG/LCR]
5	214A6-42771		SCREW	ｽｸﾘｭ	2	
6	222A2-42031		SCREW	ｽｸﾘｭ	4	
7	216G4-12091		SCREW	ｽｸﾘｭ	2	
8	04913-11200	+	BAND	ﾊﾞﾝﾄﾞ	1	
9	216G2-42131	+	BAND	ﾊﾞﾝﾄﾞ	14	
10	04913-10100	+	BAND	ﾊﾞﾝﾄﾞ	6	
11	04913-11100	+	BAND	ﾊﾞﾝﾄﾞ	2	
12	04913-10200	+	BAND	ﾊﾞﾝﾄﾞ	2	
A1	209K2-40501		SWITCH-ASSY,COMBINATION	ｽｲｯﾁｱｯｾﾝ	1	INC.13-22
-	509K2-30101		SWITCH-ASSY,COMBINATION	ｽｲｯﾁｱｯｾﾝ	1	[LCR][LCR/SWD] INC.13-22
-	509K2-30101		SWITCH-ASSY,COMBINATION	ｽｲｯﾁｱｯｾﾝ	1	C
						[CNG/LCR] INC.13-22
13	280C2-42331		SWITCH,TURN-SIGNAL	ｽｲｯﾁ	1	
-	280C2-42301		SWITCH,TURN-SIGNAL	ｽｲｯﾁ	1	[LCR][LCR/SWD]
-	280C2-42301		SWITCH,TURN-SIGNAL	ｽｲｯﾁ	1	C
						[CNG/LCR]
14	280C2-42341		SWITCH,DIRECTION	ｽｲｯﾁ	1	
-	280C2-42311		SWITCH,DIRECTION	ｽｲｯﾁ	1	[LCR][LCR/SWD]
-	280C2-42311		SWITCH,DIRECTION	ｽｲｯﾁ	1	C
						[CNG/LCR]
15	NO PART NO.	#	BODY	ﾎﾞﾃﾞｨ	1	
16	NO PART NO.	#	CAM,CANCEL,RH	ｶﾑ	1	
-	NO PART NO.	#	CAM,CANCEL,RH	ｶﾑ	1	[LCR][LCR/SWD]
-	NO PART NO.	#	CAM,CANCEL,RH	ｶﾑ	1	C
						[CNG/LCR]
17	NO PART NO.	#	SPRING	ｽﾌﾟﾘﾝｸﾞ	1	
18	NO PART NO.	#	SCREW	ｽｸﾘｭ	4	
19	280C2-42351		CONTACT,HORN	ｺﾝﾀｸﾄ	2	
20	NO PART NO.	#	CODE,CP-HORN	ｺｰﾄﾞ	1	
21	NO PART NO.	#	SPRING	ｽﾌﾟﾘﾝｸﾞ	2	
22	NO PART NO.	#	SCREW	ｽｸﾘｭ	2	
23	209K2-43001		SCREW	ｽｸﾘｭ	2	
24	229F6-42201		SEAL,PANEL-COVER,A	ｼｰﾙ	1	
25	01033-05014		SCREW	ｽｸﾘｭ	3	

FIG.37 ELECTRIC PARTS (GASOLINE)

(F5022450) エレクトリックパーツ

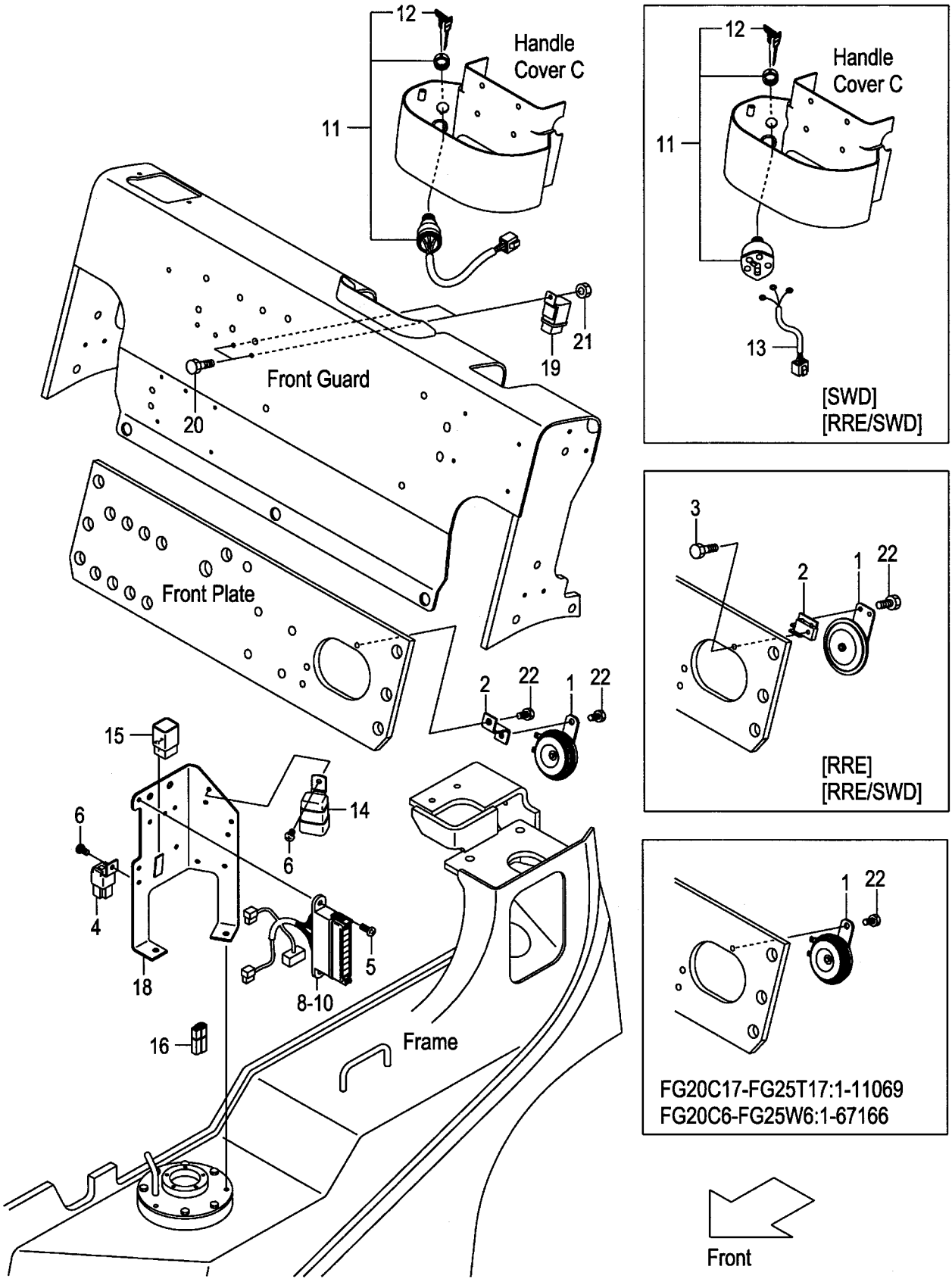

A:FG20C17 FG20T17 FG25C17 FG25T17 D:FG20W6
B:FG20C6 FG20T6 E:FG25W6
C:FG25C6 FG25T6

FIG.37
(F5022450)

Item No	Part No.	Mark	Description		Req'd	Remarks : Serial No.
1	216G2-43651		HORN	ﾎｰﾝ	1	
-	20712-40275		HORN	ﾎｰﾝ	1	[RRE][RRE/SWD]
2	239A6-42751		BRACKET,HORN	ﾌﾞﾗｹｯﾄ	1	A:11070-
						B,C,D,E:67167-
-	539A9-92001		BRACKET,HORN	ﾌﾞﾗｹｯﾄ	1	[RRE][RRE/SWD]
3	01183-06025		BOLT	ﾎﾞﾙﾄ	1	[RRE][RRE/SWD]
4	216G2-43711		UNIT,FLASHER	ﾕﾆｯﾄ	1	
5	214A2-42621		SCREW	ｽｸﾘｭ	2	
6	214A2-42611		SCREW	ｽｸﾘｭ	2	
7	04913-10200	+	BAND	ﾊﾞﾝﾄﾞ	2	
8	235C2-40301		BOX,FUSE	ﾎﾞｯｸｽ	1	INC.9,10
9	214T2-42311		FUSE,10A	ﾋｭｰｽﾞ	7	
10	214T2-42321		FUSE,30A	ﾋｭｰｽﾞ	1	
11	216G2-42311		SWITCH,STARTER	ｽｲｯﾁ	1	INC.12
-	24352-42521		SWITCH,STARTER	ｽｲｯﾁ	1	[SWD][RRE/SWD] INC.12
12	216G2-43401		KEY,SPARE,511323	ｷｰ	1	(1SET=2PCS)
-	216G2-43411		KEY,SPARE,512421	ｷｰ	(1)	(1SET=2PCS)
-	216G2-43421		KEY,SPARE,513454	ｷｰ	(1)	(1SET=2PCS)
-	93956-59279		KEY,SPARE,511323	ｷｰ	1	[SWD][RRE/SWD](1SET=2PCS)
13	534A7-72001		WIRE,LEAD	ﾜｲﾔ	1	[SWD][RRE/SWD]
14	217G2-42301		RELAY,STARTER	ﾘﾚｰ	1	A:1-11009
						B,C,D,E:1-65056
-	216G2-42321		RELAY,STARTER	ﾘﾚｰ	1	A:11010-
						B,C,D,E:65057-
15	228F2-42131		RELAY,AUTO-CHOKE	ﾘﾚｰ	1	
16	21152-42091		DIODE,MOLD-UNIT	ﾀﾞｲｵｰﾄﾞ	1	
17	234B2-42201	+	TIE,PUSH-MOUNT	ﾀｲ	1	
18	218G2-42001		BRACKET,ELECTRIC	ﾌﾞﾗｹｯﾄ	1	
19	26062-42881		RELAY,12V	ﾘﾚｰ	2	
20	239A5-42381		BOLT	ﾎﾞﾙﾄ	2	
21	01400-00006		NUT	ﾅｯﾄ	2	
22	01185-08016		BOLT	ﾎﾞﾙﾄ	1	A:1-11069
						B,C,D,E:1-67166
-	01185-08016		BOLT	ﾎﾞﾙﾄ	2	A:11070-
						B,C,D,E:67167-
-	01183-06016		BOLT	ﾎﾞﾙﾄ	2	[RRE][RRE/SWD]

FIG.38 ELECTRIC PARTS (DIESEL)

(F5022460) エレクトリックパーツ

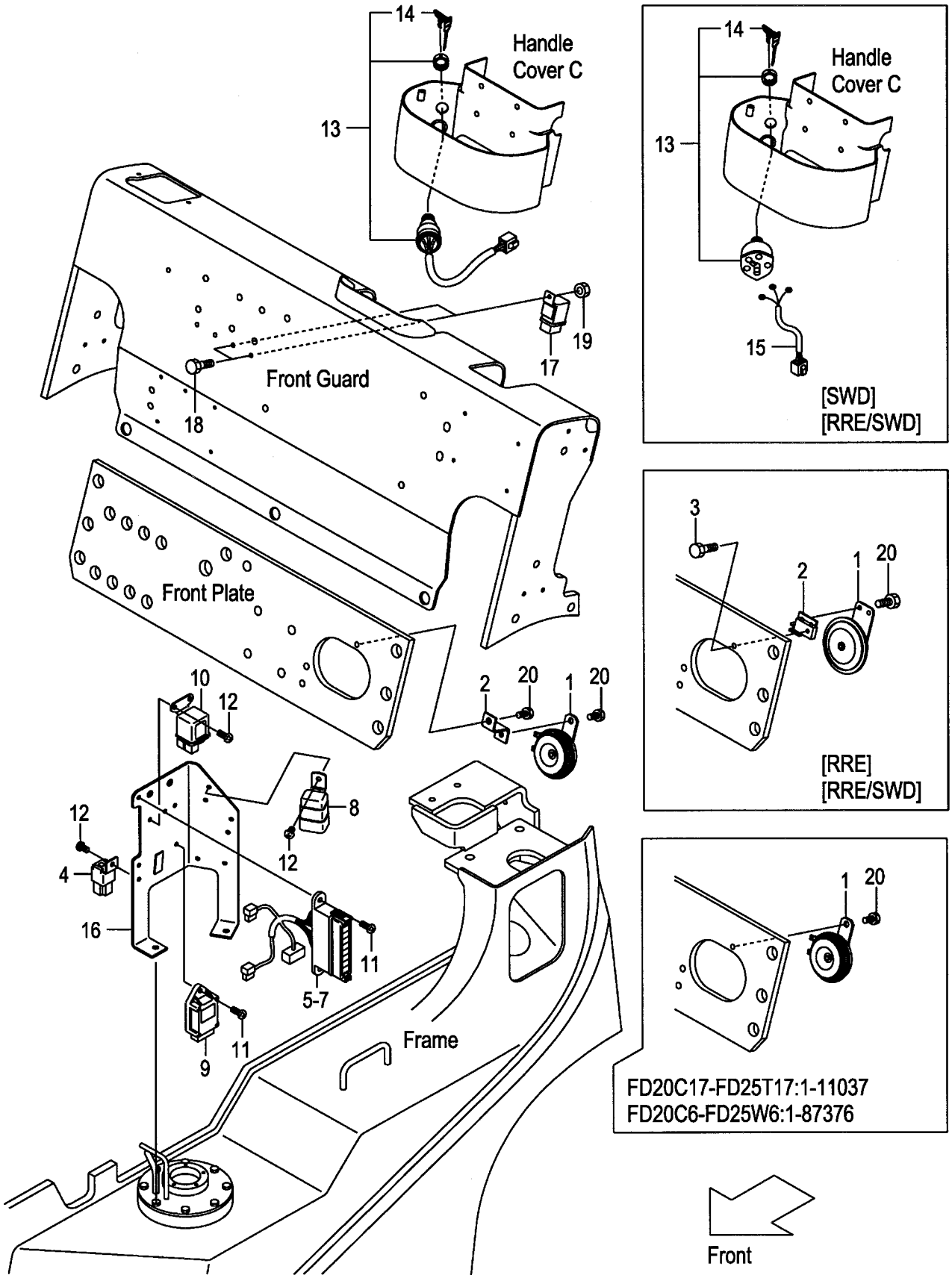

A:FD20C17 FD20T17 FD25C17 FD25T17
B:FD20C6 FD20T6 FD25C6 FD25T6
C:FD20W6 FD25W6

FIG.38
(F5022460)

Item No	Part No.	Mark	Description		Req'd	Remarks : Serial No.
1	216G2-43651		HORN	ﾎｰﾝ	1	
-	20712-40275		HORN	ﾎｰﾝ	1	[RRE][RRE/SWD]
2	239A6-42751		BRACKET,HORN	ﾌﾞﾗｹｯﾄ	1	A:11038-
						B,C:87377-
-	539A9-92001		BRACKET,HORN	ﾌﾞﾗｹｯﾄ	1	[RRE][RRE/SWD]
3	01183-06025		BOLT	ﾎﾞﾙﾄ	1	[RRE][RRE/SWD]
4	216G2-43711		UNIT,FLASHER	ﾕﾆｯﾄ	1	
5	235C2-40301		BOX,FUSE	ﾎﾞｯｸｽ	1	INC.6,7
6	214T2-42311		FUSE,10A	ﾋｭｰｽﾞ	7	
7	214T2-42321		FUSE,30A	ﾋｭｰｽﾞ	1	
8	217G2-42301		RELAY,STARTER	ﾘﾚｰ	1	
9	21152-42013		TIMER,QOS-3	ﾀｲﾏ	1	
10	21152-42021		RELAY,GLOW-PLUG	ﾘﾚｰ	1	
11	214A2-42621		SCREW	ｽｸﾘｭ	3	
12	214A2-42611		SCREW	ｽｸﾘｭ	4	
13	216G2-42311		SWITCH,STARTER	ｽｲｯﾁ	1	INC.14
-	24352-42521		SWITCH,STARTER	ｽｲｯﾁ	1	[SWD][RRE/SWD] INC.14
14	216G2-43401		KEY,SPARE,511323	ｷｰ	1	(1SET=2PCS)
-	216G2-43411		KEY,SPARE,512421	ｷｰ	(1)	(1SET=2PCS)
-	216G2-43421		KEY,SPARE,513454	ｷｰ	(1)	(1SET=2PCS)
-	93956-59279		KEY,SPARE,511323	ｷｰ	1	[SWD][RRE/SWD](1SET=2PCS)
15	534A7-72001		WIRE,LEAD	ﾜｲﾔ	1	[SWD][RRE/SWD]
16	218G2-42001		BRACKET,ELECTRIC	ﾌﾞﾗｹｯﾄ	1	
17	26062-42881		RELAY,12V	ﾘﾚｰ	2	
18	239A5-42381		BOLT	ﾎﾞﾙﾄ	2	
19	01400-00006		NUT	ﾅｯﾄ	2	
20	01185-08016		BOLT	ﾎﾞﾙﾄ	1	A:1-11037
						B,C:1-87376
-	01185-08016		BOLT	ﾎﾞﾙﾄ	2	A:11038-
						B,C:87377-
-	01183-06016		BOLT	ﾎﾞﾙﾄ	2	[RRE][RRE/SWD]

FIG.39 BATTERY (GASOLINE)

(F5022470) ﾊﾞｯﾃﾘ

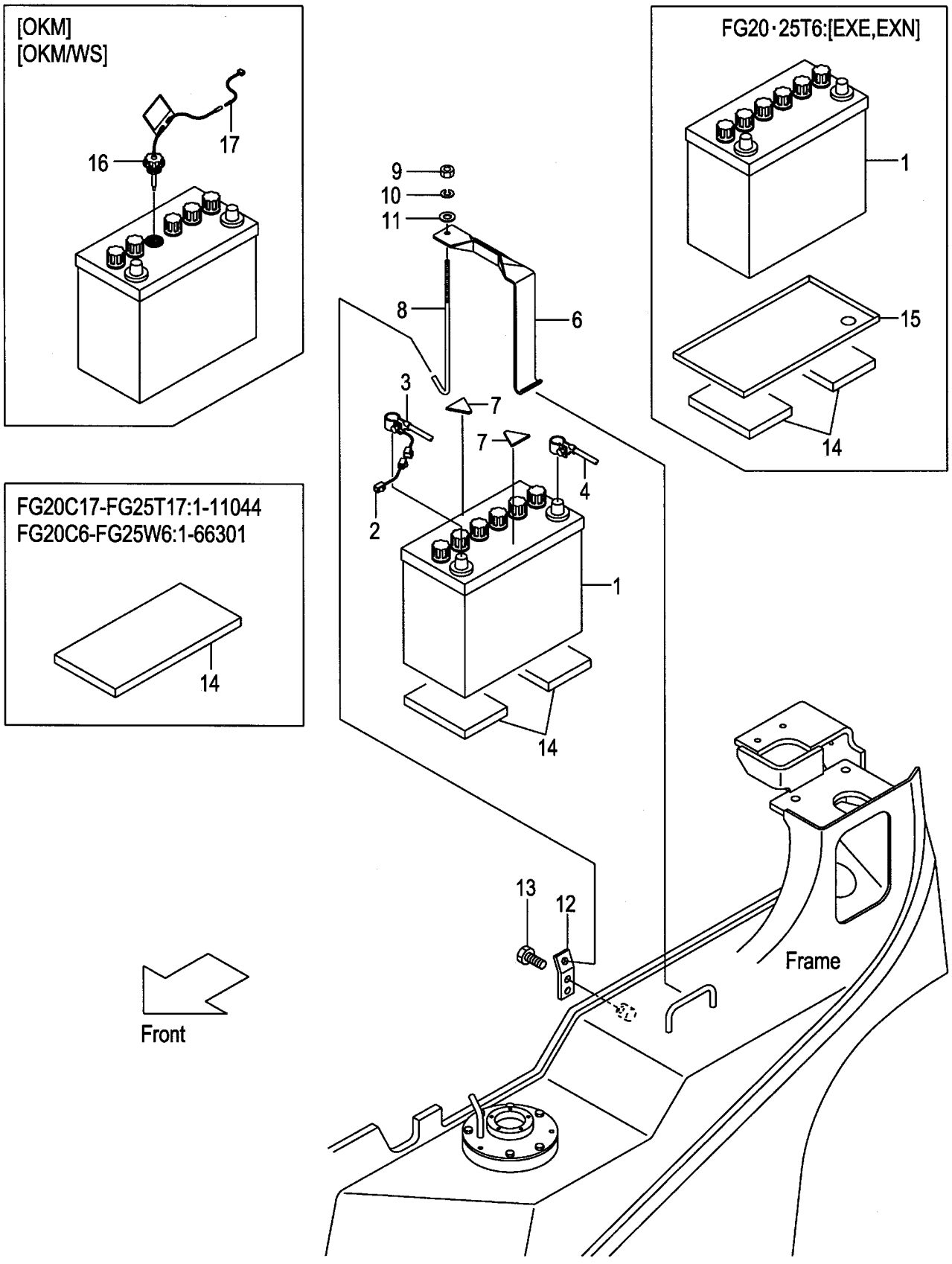

A:FG20C17 FG20T17 FG25C17 FG25T17 C:FG20T6 FG25T6
B:FG20C6 FG25C6 D:FG20W6 FG25W6

Item No	Part No.	Mark	Description		Req'd	Remarks : Serial No.
1	225R2-42001		BATTERY,WET,55B24R	ﾊﾞｯﾃﾘ	1	
-	217G2-42051		BATTERY,WET,65D23R	ﾊﾞｯﾃﾘ	1	[WS]
2	25592-42081		WIRE,FUSIBLE-LINK	ﾜｲﾔ	1	
3	237A2-42151		CABLE,BATTERY(+)	ｹｰﾌﾞﾙ	1	
-	217G2-42151		CABLE,BATTERY(+)	ｹｰﾌﾞﾙ	1	[WS]
-	216G2-43151		CABLE,BATTERY(+)	ｹｰﾌﾞﾙ	1	C:1-67709
						[EXE][EXN]
-	237A2-42151		CABLE,BATTERY(+)	ｹｰﾌﾞﾙ	1	C:67710-
						[EXE][EXN]
4	212T2-42311		CABLE,BATTERY(-)	ｹｰﾌﾞﾙ	1	
-	238A2-42151		CABLE,BATTERY(-)	ｹｰﾌﾞﾙ	1	[WS]
-	536G3-82201		CABLE,BATTERY(-)	ｹｰﾌﾞﾙ	1	C
						[EXE][EXN]
5	516G3-82521	+	TERMINAL,BATTERY	ﾀｰﾐﾅﾙ	1	C
						[EXE][EXN]
6	216G2-42071		HOLDER,BATTERY	ﾎﾙﾀﾞ	1	
-	217G2-42021		HOLDER,BATTERY	ﾎﾙﾀﾞ	1	[WS]
7	216G2-43111		RUBBER	ﾗﾊﾞｰ	2	
8	256A2-42171		BOLT,ANCHOR	ﾎﾞﾙﾄ	1	
9	01420-00006		NUT	ﾅｯﾄ	1	
10	02010-00006		WASHER	ﾜｯｼｬ	1	
11	23452-42181		WASHER	ﾜｯｼｬ	1	
12	218G2-42101		HOOK,ANCHOR-BOLT	ﾌｯｸ	1	
-	239A2-42101		HOOK,ANCHOR-BOLT	ﾌｯｸ	1	[WS]
13	01185-08016		BOLT	ﾎﾞﾙﾄ	1	
14	239A2-42031		RUBBER	ﾗﾊﾞｰ	1	A:1-11044
						B,C,D:1-66301
-	239B2-42301		RUBBER	ﾗﾊﾞｰ	2	A:11045-
						B,C,D:66302-
15	518G2-72121		CASE,BATTERY	ｹｰｽ	1	C
						[EXE][EXN]
16	522A7-12211		CAP,BATTERY	ｷｬｯﾌﾟ	1	[OKM]
-	521A2-42001		CAP,BATTERY	ｷｬｯﾌﾟ	1	[OKM/WS]
17	539A6-22021		WIRE,LEAD	ﾜｲﾔ	1	[OKM][OKM/WS]

FIG.40 BATTERY (DIESEL)

(F5022480) ﾊﾞｯﾃﾘ

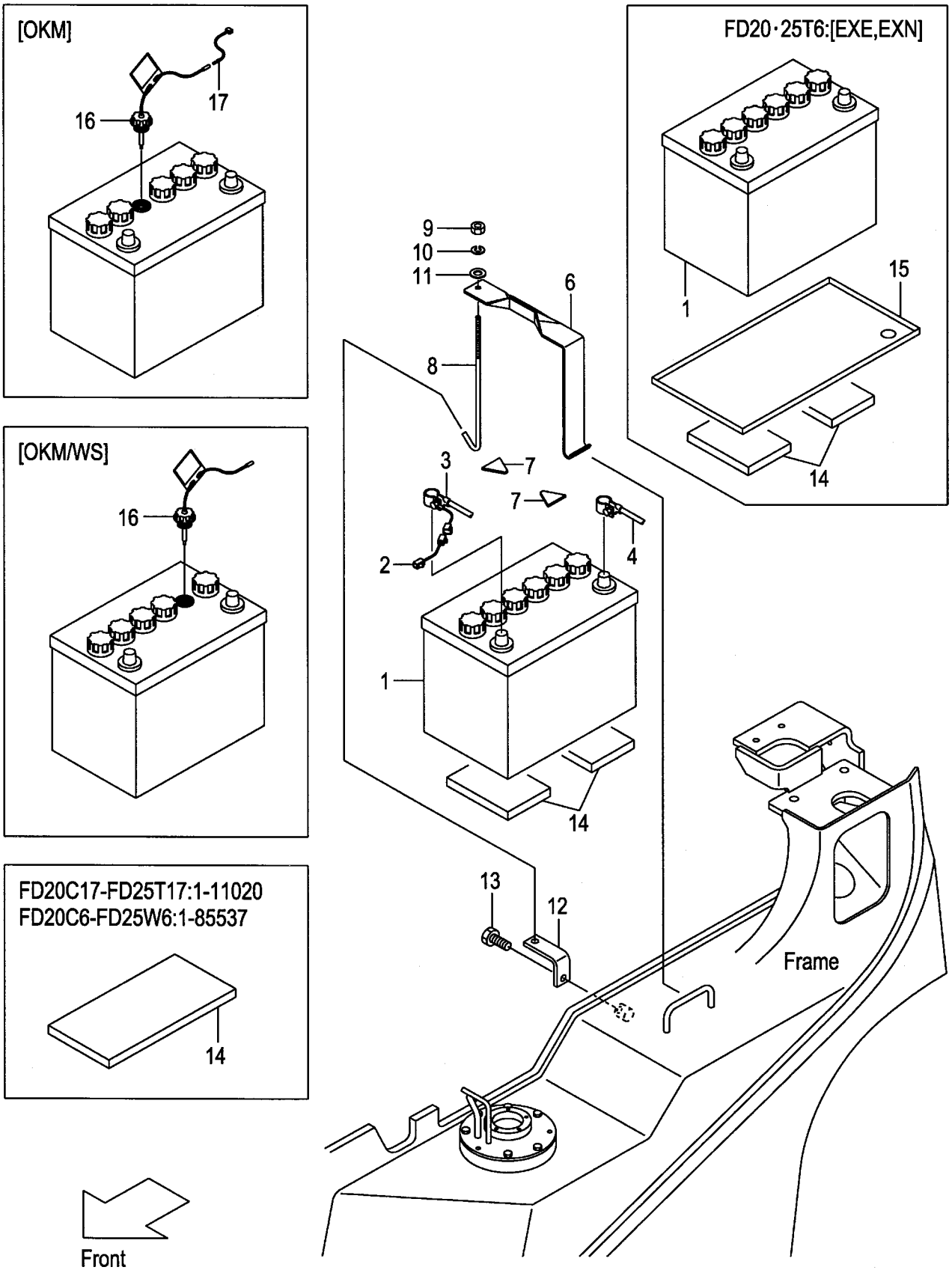

A:FD20C17 FD20T17 FD25C17 FD25T17 C:FD20T6 FD25T6
B:FD20C6 FD25C6 D:FD20W6 FD25W6

Item No	Part No.	Mark	Description		Req'd	Remarks : Serial No.
1	58106-31011		BATTERY,WET,80D26R	ﾊﾞｯﾃﾘ	1	
-	534A7-02001		BATTERY,WET,115D31R	ﾊﾞｯﾃﾘ	1	[WS]
2	25592-42081		WIRE,FUSIBLE-LINK	ﾜｲﾔ	1	
3	217G2-42151		CABLE,BATTERY(+)	ｹｰﾌﾞﾙ	1	
4	238A2-42151		CABLE,BATTERY(-)	ｹｰﾌﾞﾙ	1	
-	538G3-82201		CABLE,BATTERY(-)	ｹｰﾌﾞﾙ	1	C [EXE][EXN]
5	530C3-82361	+	TERMINAL,BATTERY	ﾀｰﾐﾅﾙ	1	C [EXE][EXN]
6	217G2-42021		HOLDER,BATTERY	ﾎﾙﾀﾞ	1	
7	216G2-43111		RUBBER	ﾗﾊﾞｰ	2	
8	256A2-42171		BOLT,ANCHOR	ﾎﾞﾙﾄ	1	
9	01420-00006		NUT	ﾅｯﾄ	1	
10	02010-00006		WASHER	ﾜｯｼｬ	1	
11	23452-42181		WASHER	ﾜｯｼｬ	1	
12	239A2-42101		HOOK,ANCHOR-BOLT	ﾌｯｸ	1	
13	01185-08016		BOLT	ﾎﾞﾙﾄ	1	
14	239A2-42031		RUBBER	ﾗﾊﾞｰ	1	A:1-11020 B,C,D:1-85537
-	239B2-42301		RUBBER	ﾗﾊﾞｰ	2	A:11021- B,C,D:85538-
15	539A2-72121		CASE,BATTERY	ｹｰｽ	1	C [EXE][EXN]
16	521A2-42001		CAP,BATTERY	ｷｬｯﾌﾟ	1	[OKM]
-	522A2-42001		CAP,BATTERY	ｷｬｯﾌﾟ	1	[OKM/WS]
17	539A6-22021		WIRE,LEAD	ﾜｲﾔ	1	[OKM](WITHOUT OKM/WS)

FRONT GUARD WIRE HARNESS (CLUTCH & OIL CLUTCH)

FIG.41
(F50224C0) フロントガードワイヤハーネス

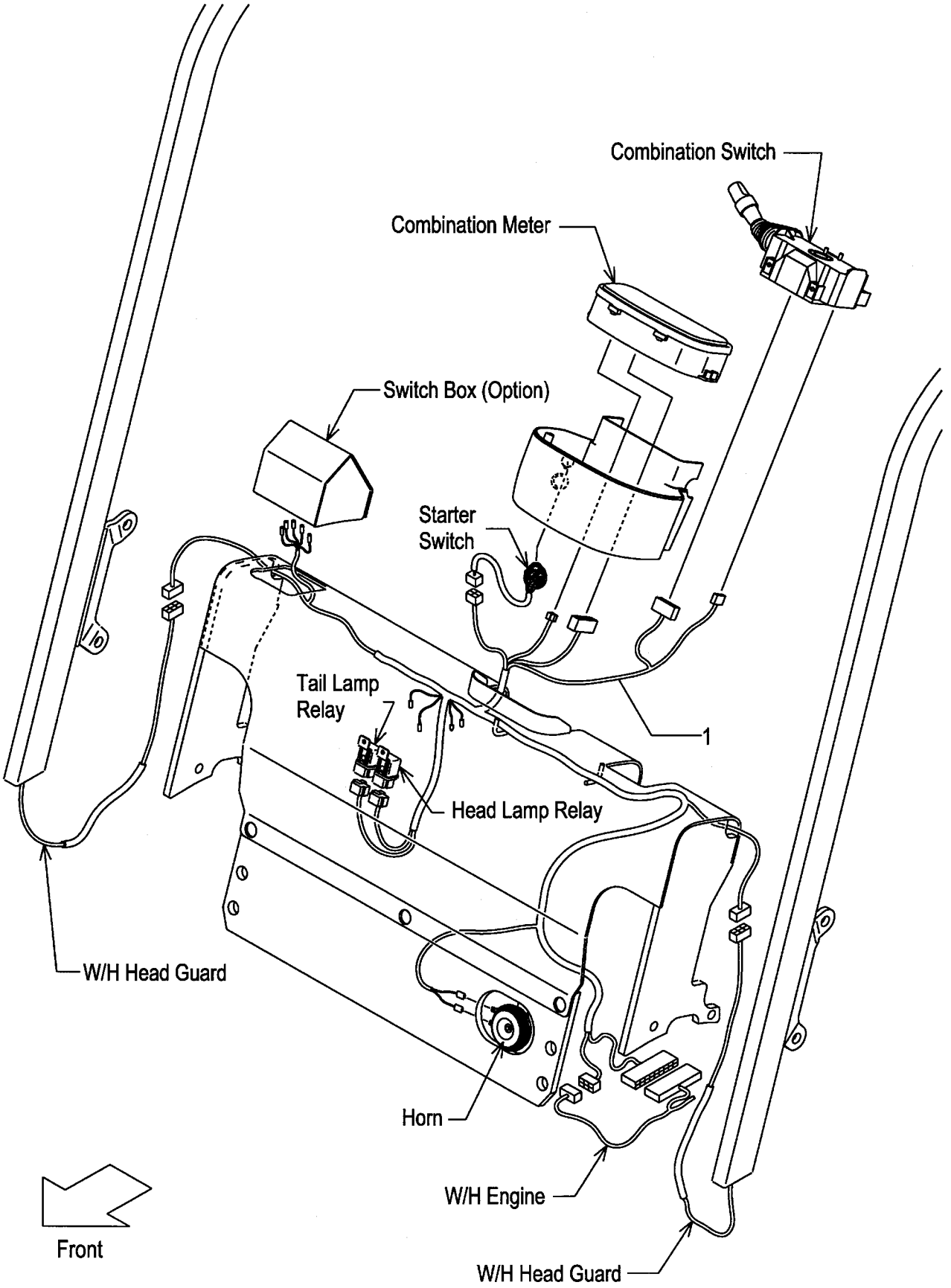

A:FG20C17 FG25C17 D:FD20C17 FD25C17
B:FG20C6 FG25C6 E:FD20C6 FD25C6
C:FG20W6 FG25W6 F:FD20W6 FD25W6

FIG.41
(F50224C0)

Item No	Part No.	Mark	Description	Req'd	Remarks : Serial No.
1	239A2-42201		WIRE-HARNESS,F.GUARD ﾜｲﾔﾊｰﾈｽ	1	
-	539A3-72151		WIRE-HARNESS,F.GUARD ﾜｲﾔﾊｰﾈｽ	1	[FC]

FIG.42 FRONT GUARD WIRE HARNESS (TOR-CON)

(F50224D0) フロントガードワイヤハーネス

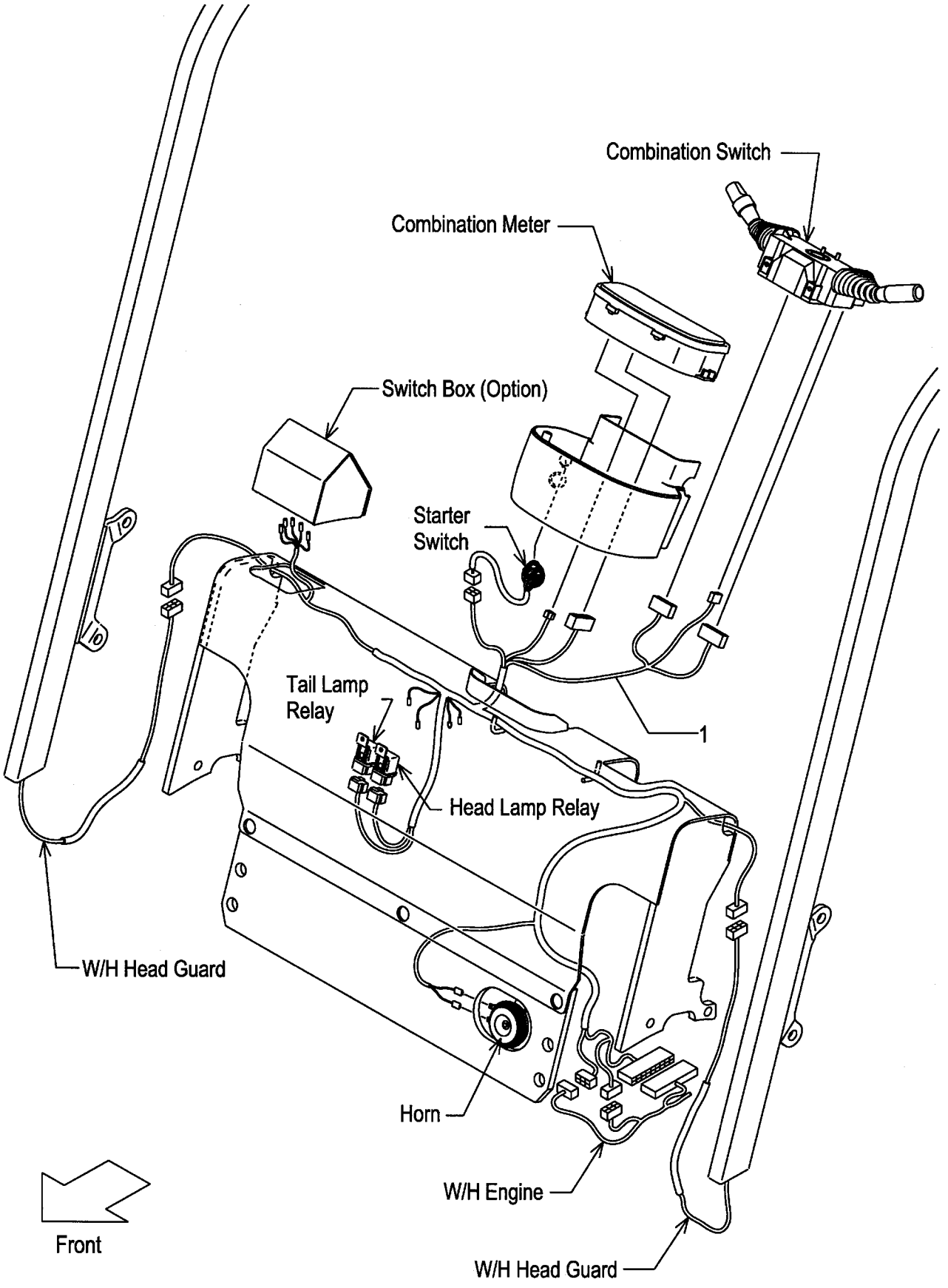

FIG.42
(F50224D0)

A:FG20T17 FG25T17 C:FD20T17 FD25T17
B:FG20T6 FG25T6 D:FD20T6 FD25T6

Item No	Part No.	Mark	Description	Req'd	Remarks : Serial No.
1	239B2-42201		WIRE-HARNESS,F.GUARD ﾜｲﾔﾊｰﾈｽ	1	
-	539B3-82301		WIRE-HARNESS,F.GUARD ﾜｲﾔﾊｰﾈｽ	1	B,D [EXE][EXN]
-	539B2-32201		WIRE-HARNESS,F.GUARD ﾜｲﾔﾊｰﾈｽ	1	[LCR]
-	539B3-72151		WIRE-HARNESS,F.GUARD ﾜｲﾔﾊｰﾈｽ	1	[FC]
-	539B3-72201		WIRE-HARNESS,F.GUARD ﾜｲﾔﾊｰﾈｽ	1	[FC/LCR]

ENGINE WIRE HARNESS
FIG.43 (GASOLINE:CLUTCH & OIL CLUTCH)
(F50224E0) エンジンワイヤハーネス

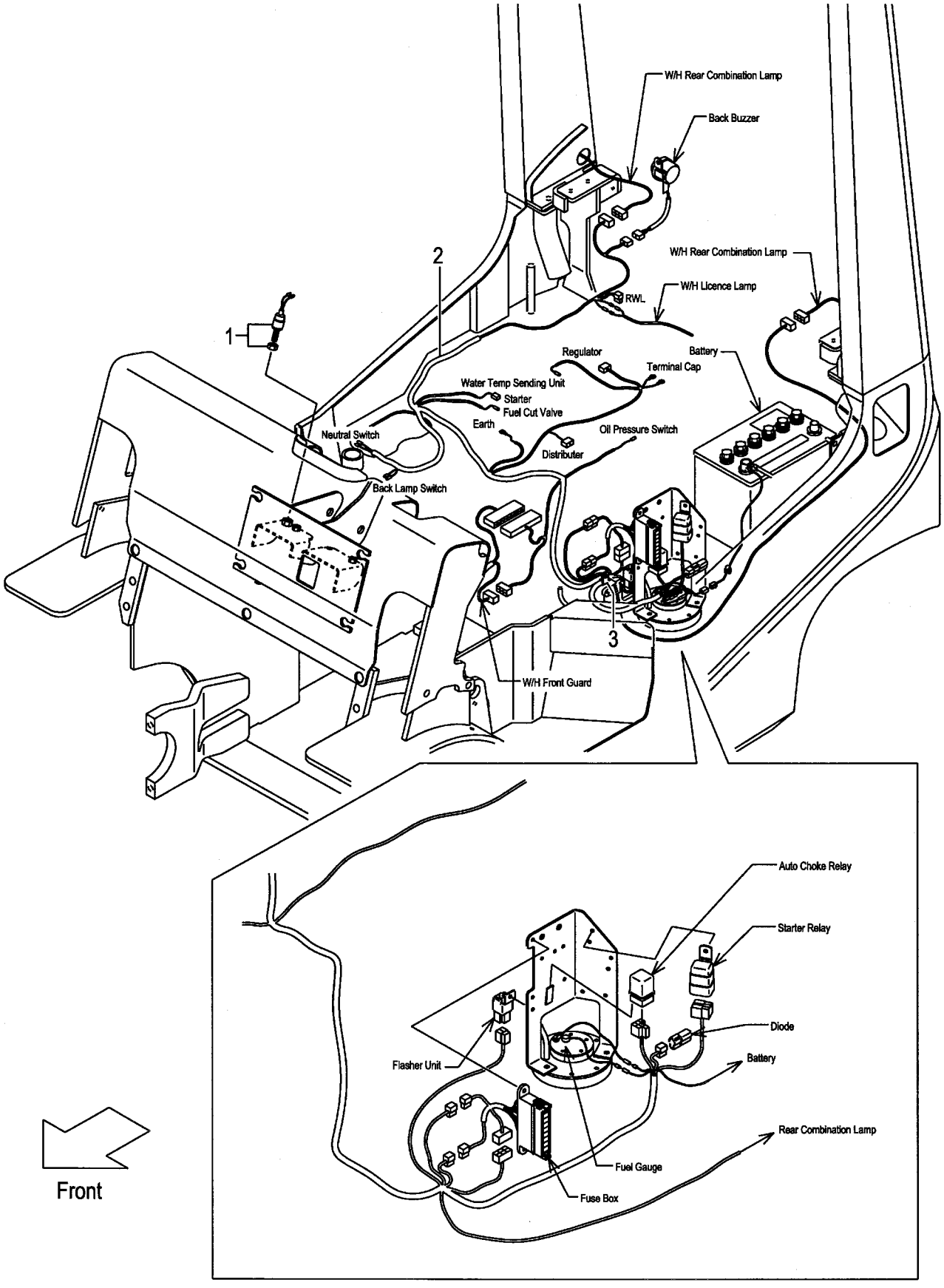

A:FG20C17 FG25C17
B:FG20C6 FG25C6
C:FG20W6 FG25W6

FIG.43
(F50224E0)

Item No	Part No.	Mark	Description		Req'd	Remarks : Serial No.
1	23232-42072		SWITCH,STOP-LAMP	ｽｲｯﾁ	1	
2	237A2-42211		WIRE-HARNESS,ENGINE	ﾜｲﾔﾊｰﾈｽ	1	A:1-11009 B,C:1-65056
-	237A2-42212		WIRE-HARNESS,ENGINE	ﾜｲﾔﾊｰﾈｽ	1	A:11010- B,C:65057-
-	537A3-72021		WIRE-HARNESS,ENGINE	ﾜｲﾔﾊｰﾈｽ	1	[FC]
-	537A2-72011		WIRE-HARNESS,ENGINE	ﾜｲﾔﾊｰﾈｽ	1	B [EECG]
-	537A2-72021		WIRE-HARNESS,ENGINE	ﾜｲﾔﾊｰﾈｽ	1	B [EECLP]
3	214A2-42331		CLIP	ｸﾘｯﾌﾟ	3	

FIG.44 ENGINE WIRE HARNESS (GASOLINE:TOR-CON)

(F50224F0) エンジンワイヤハーネス

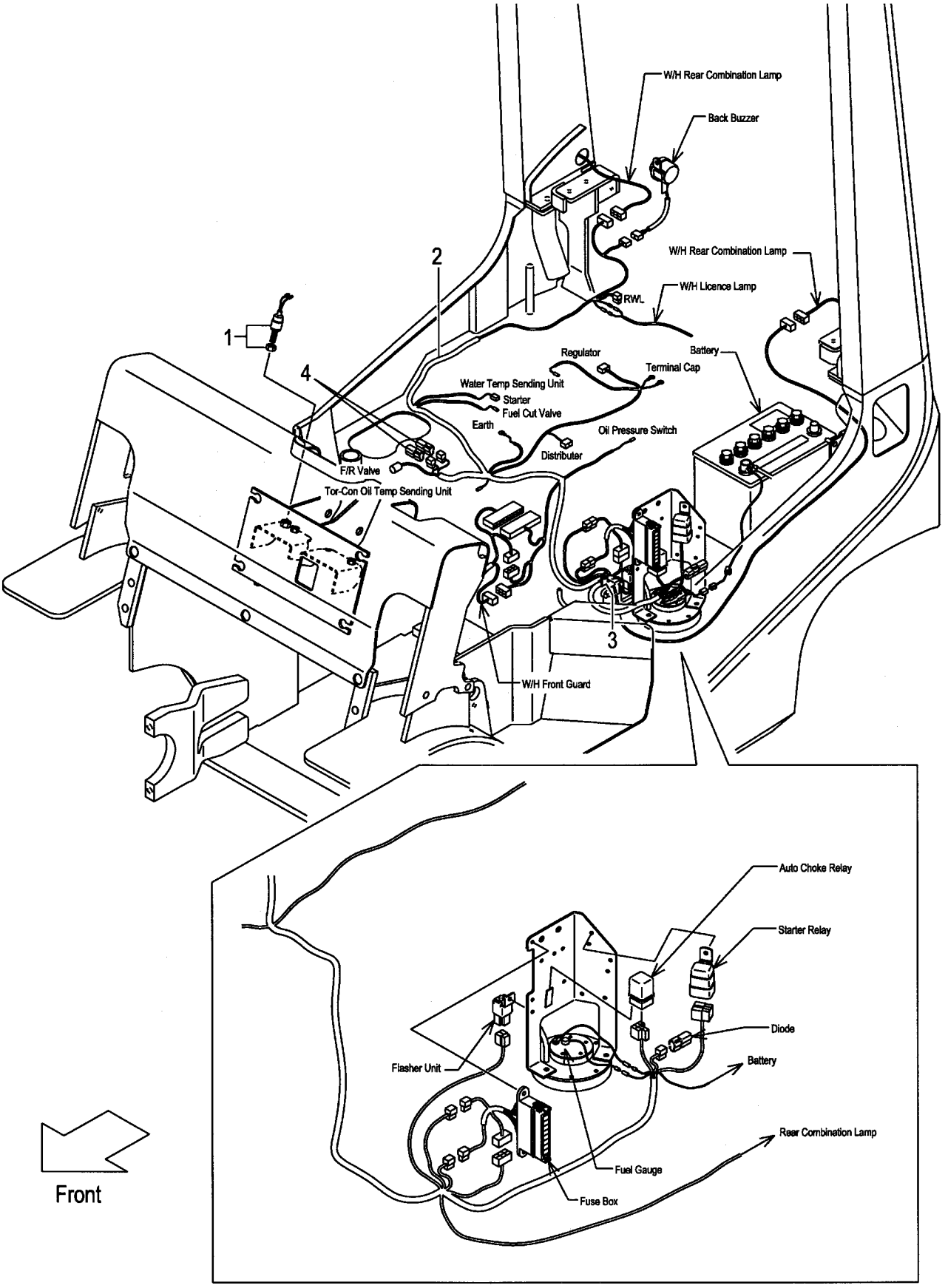

A:FG20T17 FG25T17
B:FG20T6 FG25T6

FIG.44
(F50224F0)

Item No	Part No.	Mark	Description		Req'd	Remarks : Serial No.
1	23232-42072		SWITCH,STOP-LAMP	ｽｲｯﾁ	1	
2	237B2-42211		WIRE-HARNESS,ENGINE	ﾜｲﾔﾊｰﾈｽ	1	A:1-11009 B:1-65056
-	237B2-42212		WIRE-HARNESS,ENGINE	ﾜｲﾔﾊｰﾈｽ	1	A:11010- B:65057-
-	537B3-72021		WIRE-HARNESS,ENGINE	ﾜｲﾔﾊｰﾈｽ	1	[FC]
-	537B2-72011		WIRE-HARNESS,ENGINE	ﾜｲﾔﾊｰﾈｽ	1	B [EECG]
-	537B2-72021		WIRE-HARNESS,ENGINE	ﾜｲﾔﾊｰﾈｽ	1	B [EECLP]
3	214A2-42331		CLIP	ｸﾘｯﾌﾟ	3	
4	230C2-42201		DIODE,3A	ﾀﾞｲｵｰﾄﾞ	2	

FIG.45 ENGINE WIRE HARNESS (DIESEL:CLUTCH)

(F50224G0) エンジンワイヤハーネス

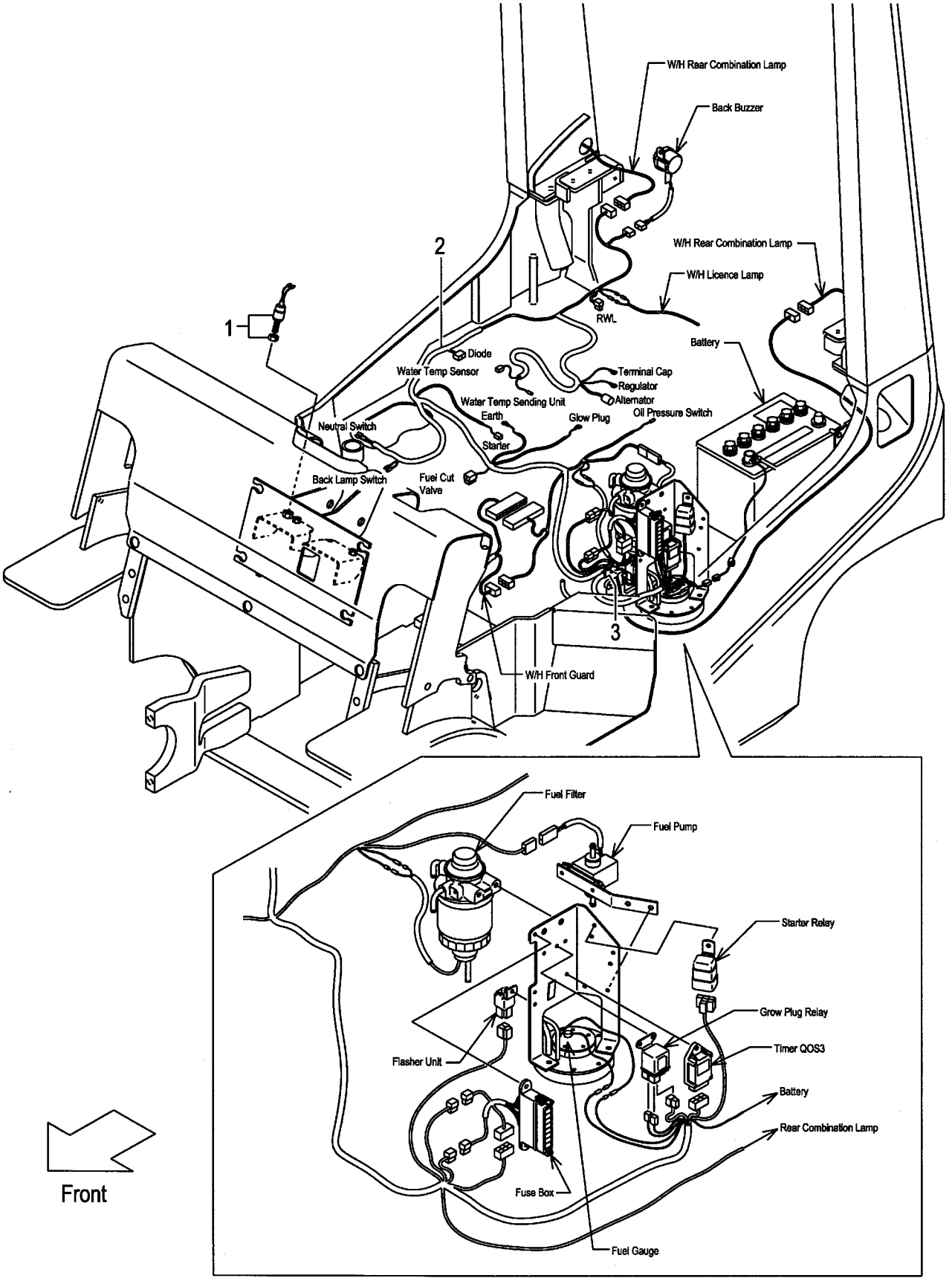

FIG.45
(F50224G0)

A:FD20C17 FD25C17

Item No	Part No.	Mark	Description	Req'd	Remarks : Serial No.
1	23232-42072		SWITCH,STOP-LAMP スイッチ	1	
2	238A2-42211		WIRE-HARNESS,ENGINE ワイヤハーネス	1	
-	538A3-72021		WIRE-HARNESS,ENGINE ワイヤハーネス	1	[FC]
3	214A2-42331		CLIP クリップ	3	

ENGINE WIRE HARNESS
FIG.46 (DIESEL:CLUTCH & OIL CLUTCH)
(F50224H0) エンジンワイヤハーネス

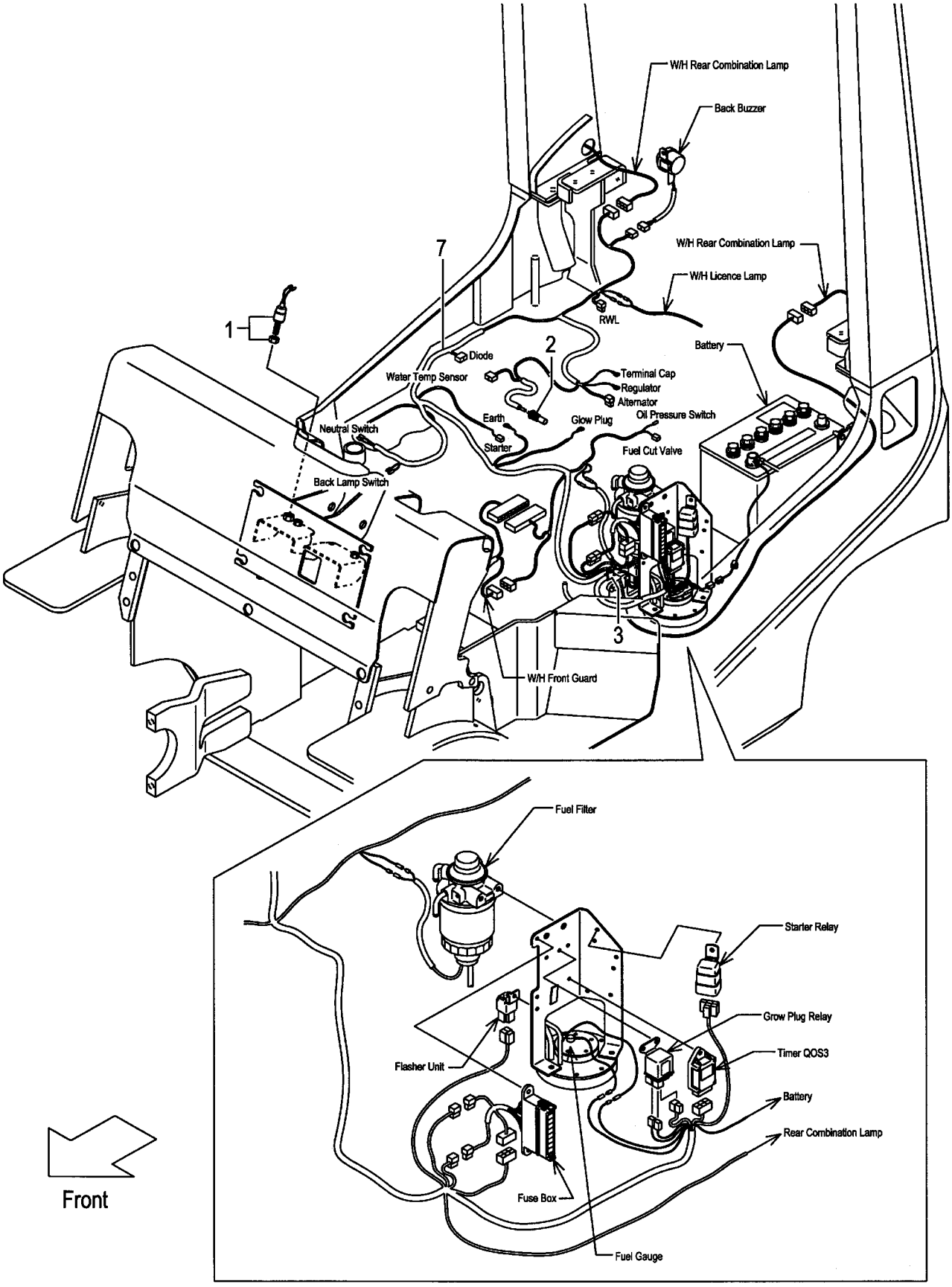

A:FD20C6 FD25C6
B:FD20W6 FD25W6

FIG.46
(F50224H0)

Item No	Part No.	Mark	Description		Req'd	Remarks : Serial No.
1	23232-42072		SWITCH,STOP-LAMP	ｽｲｯﾁ	1	
2	23652-44001		UNIT,SENDING	ﾕﾆｯﾄ	1	
3	214A2-42331		CLIP	ｸﾘｯﾌﾟ	5	
4	01100-06010	+	BOLT	ﾎﾞﾙﾄ	1	
5	02010-00006	+	WASHER	ﾜｯｼｬ	1	
6	02000-00006	+	WASHER	ﾜｯｼｬ	1	
7	238F2-42212		WIRE-HARNESS,ENGINE	ﾜｲﾔﾊｰﾈｽ	1	
-	538F3-72021		WIRE-HARNESS,ENGINE	ﾜｲﾔﾊｰﾈｽ	1	[FC]

FIG.47 ENGINE WIRE HARNESS (DIESEL:TOR-CON)

(F50224J0) エンジンワイヤハーネス

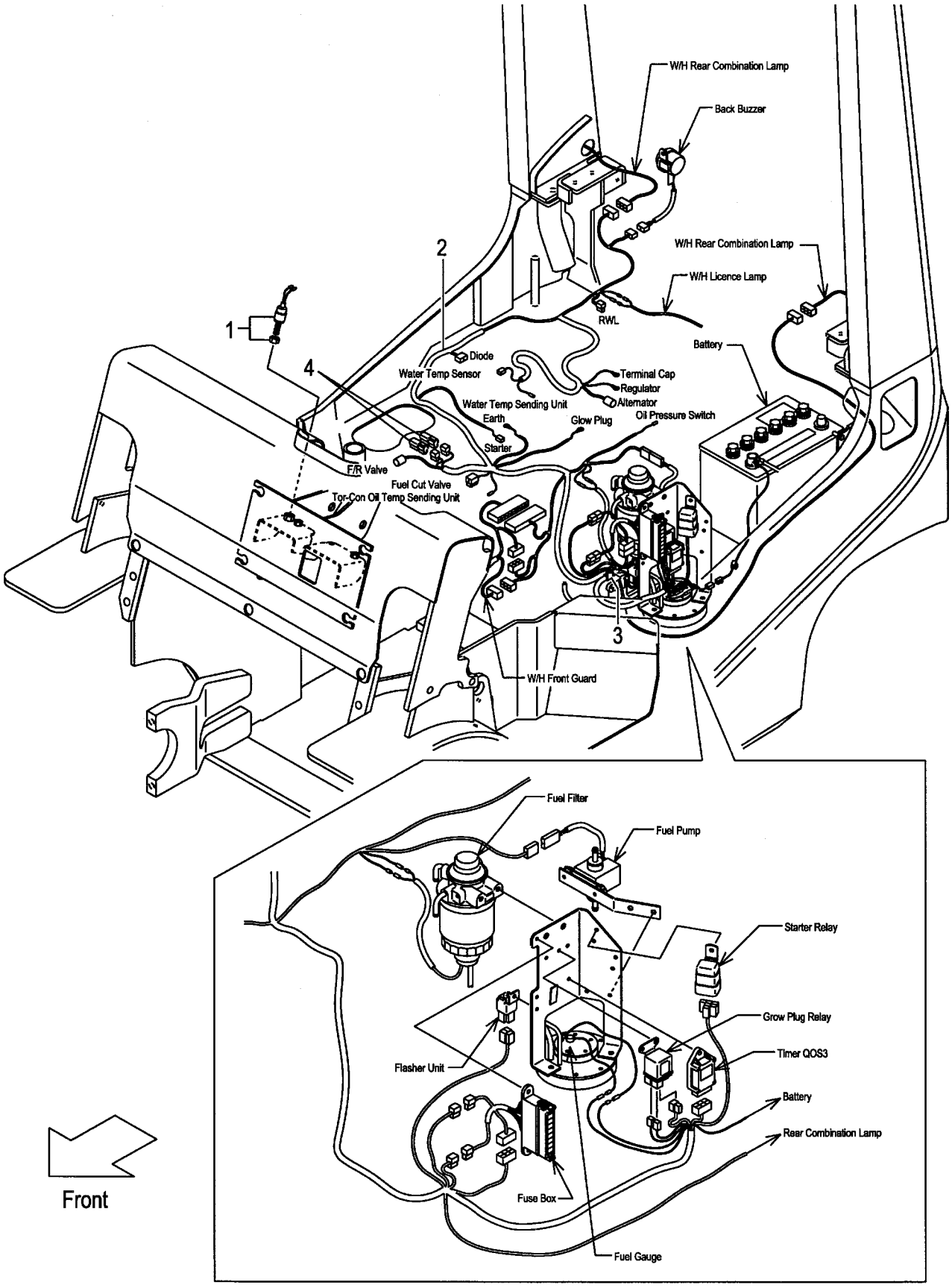

A:FD20T17 FD25T17

Item No	Part No.	Mark	Description	Req'd	Remarks : Serial No.
1	23232-42072		SWITCH,STOP-LAMP スイッチ	1	
2	238B2-42211		WIRE-HARNESS,ENGINE ワイヤハーネス	1	
-	538B3-72021		WIRE-HARNESS,ENGINE ワイヤハーネス	1	[FC]
3	214A2-42331		CLIP クリップ	3	
4	230C2-42201		DIODE,3A ダイオード	2	

FIG.48 ENGINE WIRE HARNESS (DIESEL:TOR-CON)

(F50224K0) エンジンワイヤハーネス

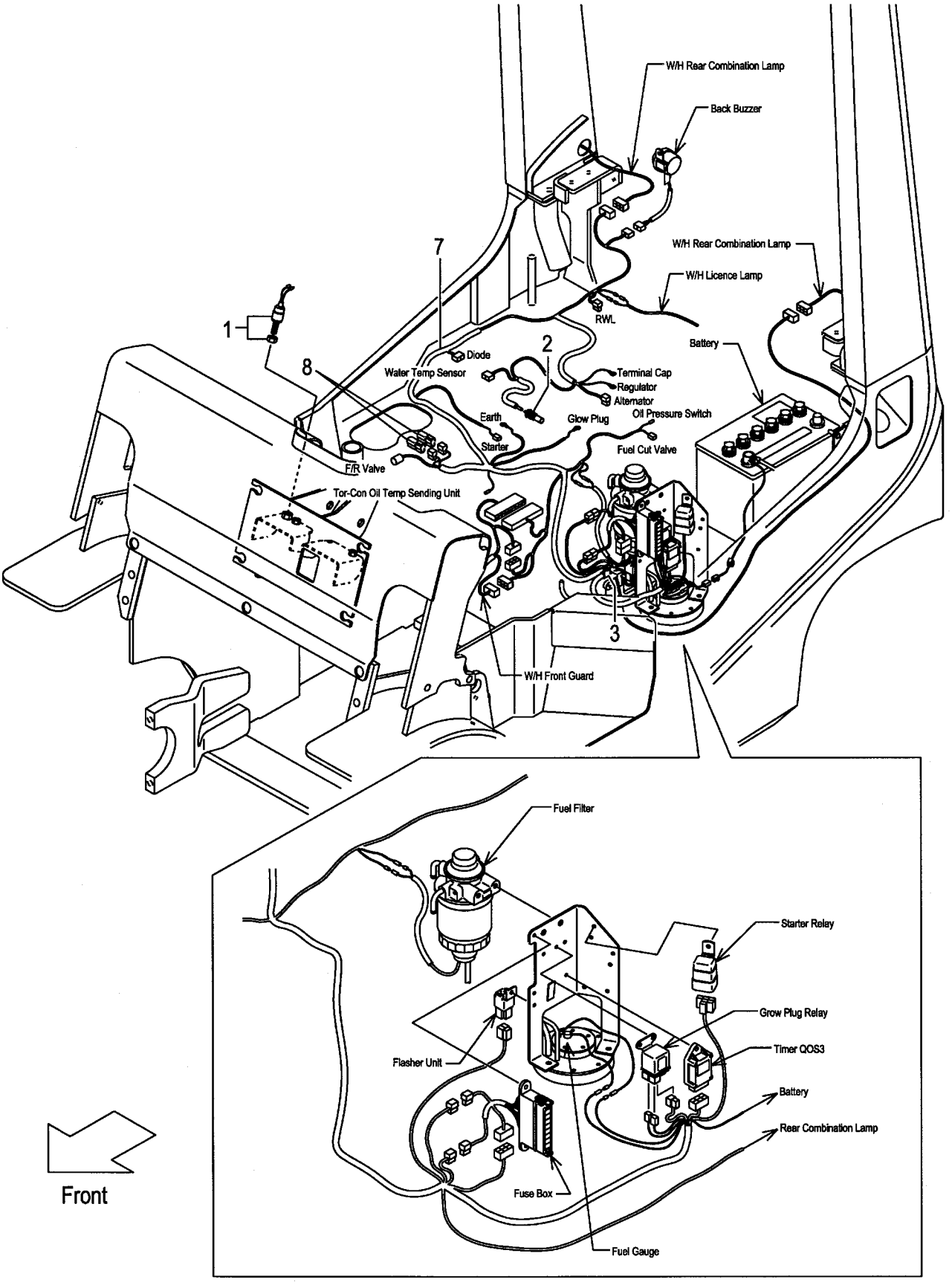

FIG.48
(F50224K0)

A:FD20T6 FD25T6

Item No	Part No.	Mark	Description		Req'd	Remarks : Serial No.
1	23232-42072		SWITCH,STOP-LAMP	ｽｲｯﾁ	1	
2	23652-44001		UNIT,SENDING	ﾕﾆｯﾄ	1	
3	214A2-42331		CLIP	ｸﾘｯﾌﾟ	5	
4	01100-06010	+	BOLT	ﾎﾞﾙﾄ	1	
5	02010-00006	+	WASHER	ﾜｯｼｬ	1	
6	02000-00006	+	WASHER	ﾜｯｼｬ	1	
7	238G2-42212		WIRE-HARNESS,ENGINE	ﾜｲﾔﾊｰﾈｽ	1	
-	538G3-72021		WIRE-HARNESS,ENGINE	ﾜｲﾔﾊｰﾈｽ	1	[FC]
8	230C2-42201		DIODE,3A	ﾀﾞｲｵｰﾄﾞ	2	

FIG.49 BACK BUZZER

(F50224A0) ﾊﾞｯｸﾌﾞｻﾞｰ

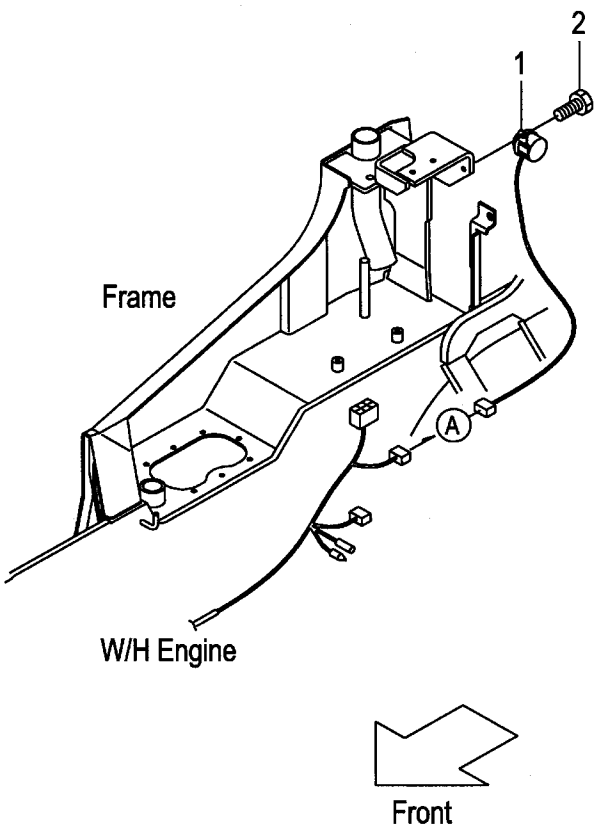

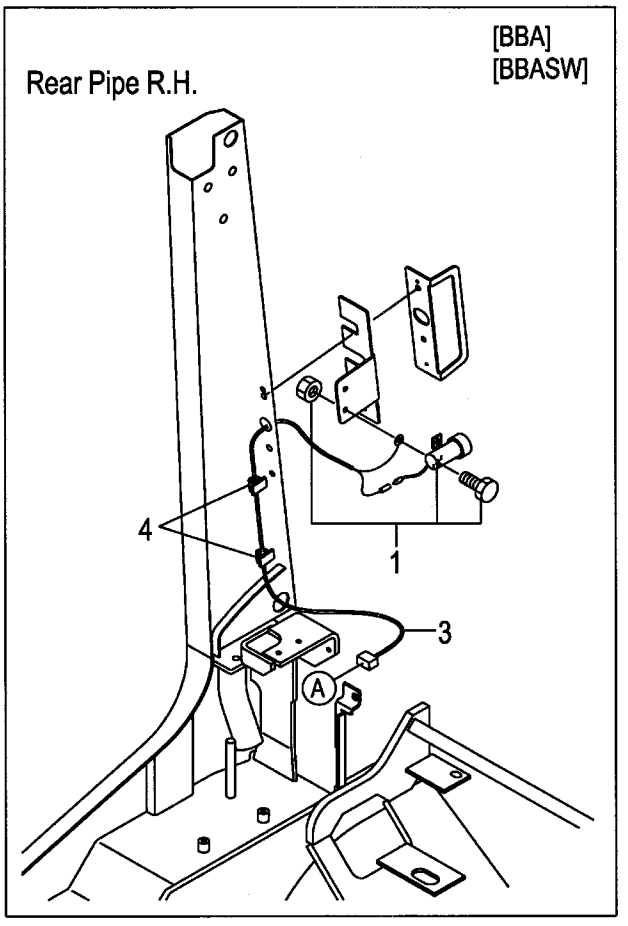

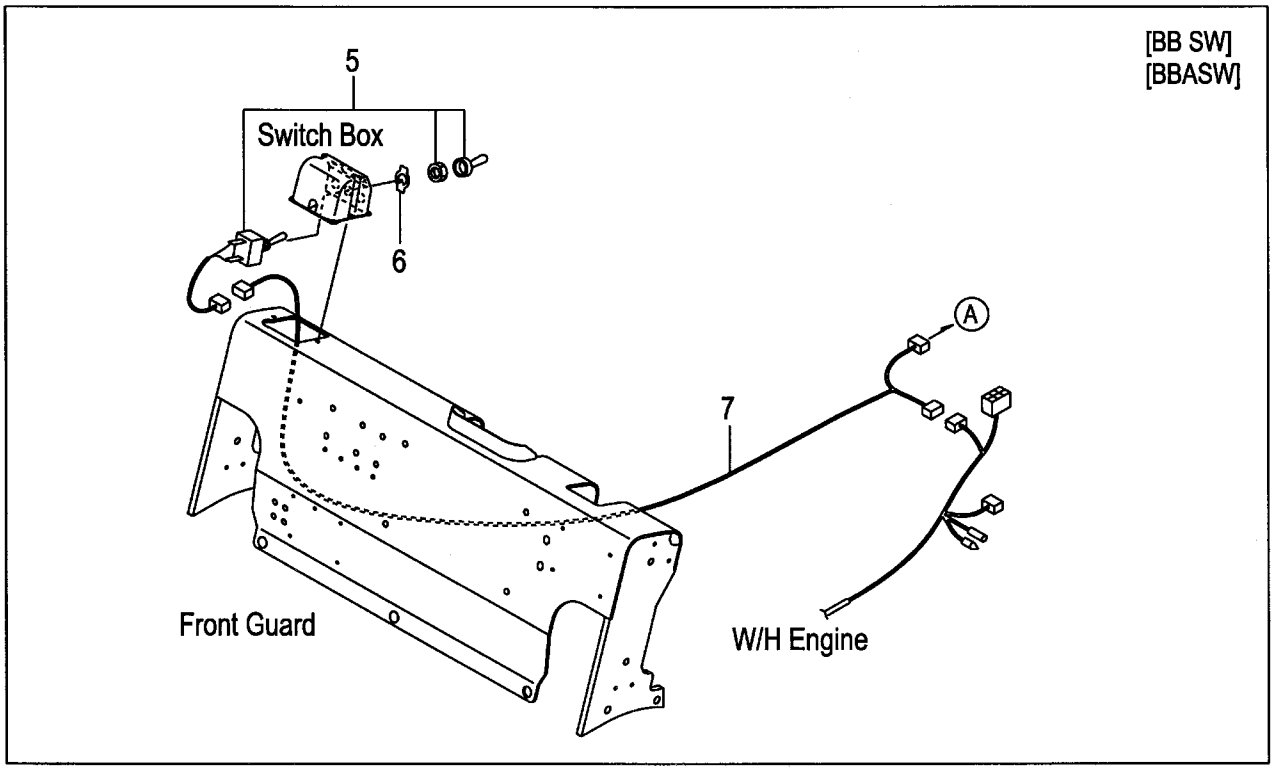

FIG.49

(F50224A0)

A:FG20C17 FG20T17 FG25C17 FG25T17 C:FD20C17 FD20T17 FD25C17 FD25T17
B:FG20C6 FG20T6 FG25C6 FG25T6 FG20W6 FG25W6 D:FD20C6 FD20T6 FD25C6 FD25T6 FD20W6 FD25W6

Item No	Part No.	Mark	Description		Req'd	Remarks : Serial No.
1	234A2-42301		BUZZER,BACK,12V	ﾌﾞｻﾞｰ	1	
-	214A2-44001		BUZZER,BACK,12V	ﾌﾞｻﾞｰ	1	[BBA][BBASW]
2	01185-08016		BOLT	ﾎﾞﾙﾄ	1	(WITHOUT BBA,BBASW)
3	516G1-32012		WIRE,LEAD	ﾜｲﾔ	1	[BBA][BBASW]
4	27732-42311		CLAMP,HARNESS	ｸﾗﾝﾌﾟ	2	[BBA][BBASW]
5	57042-72091		SWITCH	ｽｲｯﾁ	1	[BB SW][BBASW]
6	27652-62211		PLATE,SWITCH	ﾌﾟﾚｰﾄ	1	[BB SW][BBASW]
7	516G1-32002		WIRE,LEAD	ﾜｲﾔ	1	[BB SW][BBASW]

FIG.50 LIGHT UNIT

(F5022490) ライトユニット

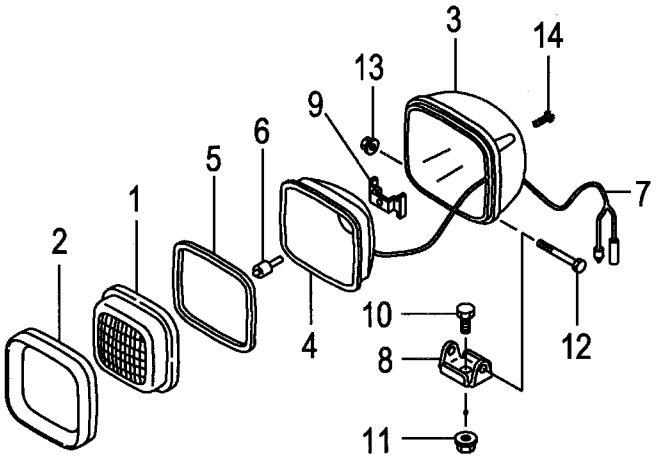

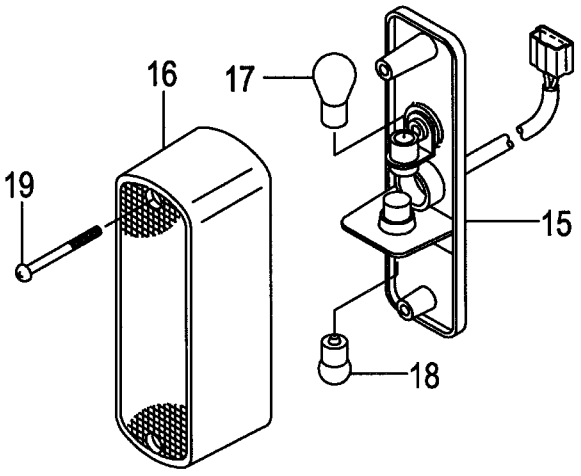

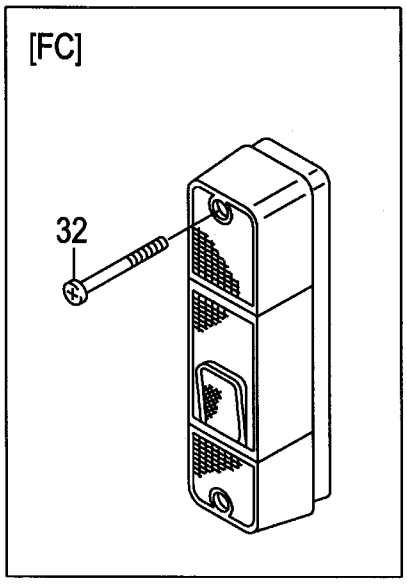

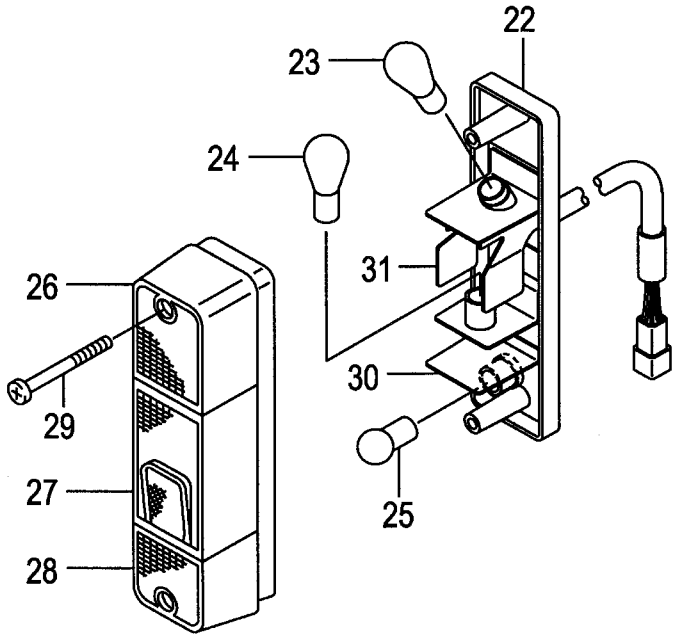

A:FG20C17 FG20T17 FG25C17 FG25T17 C:FD20C17 FD20T17 FD25C17 FD25T17
B:FG20C6 FG20T6 FG25C6 FG25T6 FG20W6 FG25W6 D:FD20C6 FD20T6 FD25C6 FD25T6 FD20W6 FD25W6

Item No	Part No.	Mark	Description		Req'd	Remarks : Serial No.
A1	216G2-40602		LAMP-ASSY,HEAD	ﾍｯﾄﾞﾗﾝﾌﾟｱｯｾﾝ	2	INC.1-14
1	216G2-43502		LENS	ﾚﾝｽﾞ	2	
2	216G2-43631		RIM	ﾘﾑ	2	
3	NO PART NO.	#	HOUSING	ﾊｳｼﾞﾝｸﾞ	2	
4	NO PART NO.	#	REFLECTOR	ﾘﾌﾚｸﾀ	2	
5	216G2-43531		GASKET	ｶﾞｽｹｯﾄ	2	
6	216G2-43542		BULB,12V/55W	ﾊﾞﾙﾌﾞ	2	
7	216G2-43551		WIRE,LEAD	ﾜｲﾔ	2	
8	216G2-43562		BRACKET	ﾌﾞﾗｹｯﾄ	2	
9	216G2-43571		SPRING	ｽﾌﾟﾘﾝｸﾞ	2	
10	216G2-43582		BOLT	ﾎﾞﾙﾄ	2	
11	216G2-43592		NUT	ﾅｯﾄ	2	
12	216G2-43602		BOLT	ﾎﾞﾙﾄ	2	
13	216G2-43611		NUT	ﾅｯﾄ	2	
14	216G2-43622		SCREW	ｽｸﾘｭ	8	
A2	216G2-40701		LAMP-ASSY,F-COMBINATION	ﾌﾛﾝﾄｺﾝﾋﾞﾈｰｼｮﾝﾗﾝﾌﾟｱｯｾﾝ	2	INC.15-19
15	NO PART NO.	#	BODY	ﾎﾞﾃﾞｨ	2	
16	216G2-40731		LENS	ﾚﾝｽﾞ	2	
17	216G2-40711		BULB,12V/27W	ﾊﾞﾙﾌﾞ	2	
18	216G2-40721		BULB,12V/10W	ﾊﾞﾙﾌﾞ	2	
19	NO PART NO.		SCREW	ｽｸﾘｭ	4	
20	239A2-42221	+	WIRE-HARNESS,H.GUARD	ﾜｲﾔﾊｰﾈｽ	2	
-	534A9-22211	+	WIRE-HARNESS,H.GUARD	ﾜｲﾔﾊｰﾈｽ	2	[HL][BKH]
21	04913-11100	+	BAND	ﾊﾞﾝﾄﾞ	2	(WITHOUT HL,BKH)
A3	214A2-40203		LAMP-ASSY,R-COMBINATION	ｺﾝﾋﾞﾈｰｼｮﾝﾗﾝﾌﾟｱｯｾﾝ	2	INC.22-31
22	NO PART NO.	#	BODY	ﾎﾞﾃﾞｨ	2	
23	210F2-42011		BULB,12V/23W	ﾊﾞﾙﾌﾞ	2	
24	214A2-44501		BULB,12V/23,8W	ﾊﾞﾙﾌﾞ	2	A:1-11013 B:1-65225 C:1-11007 D:1-83552
-	210F2-42021		BULB,12V/23,8W	ﾊﾞﾙﾌﾞ	2	A:11014- B:65226- C:11008- D:83553-
25	210F2-42031		BULB,12V/10W	ﾊﾞﾙﾌﾞ	2	
26	210F2-42201		LENS,PLASTIC	ﾚﾝｽﾞ	2	
27	210F2-42211		LENS,PLASTIC	ﾚﾝｽﾞ	2	
28	210F2-42221		LENS,PLASTIC	ﾚﾝｽﾞ	2	
29	01030-05065		SCREW	ｽｸﾘｭ	4	(WITHOUT FC)
30	210F2-42231		SHADE	ｼｪｰﾄﾞ	2	
31	214A2-44511		SHADE	ｼｪｰﾄﾞ	2	
32	514A3-72091		BOLT,PAN-HEAD	ﾎﾞﾙﾄ	4	[FC]

FIG.51 LICENSE LIGHT

(F50224L0) ライセンスライト

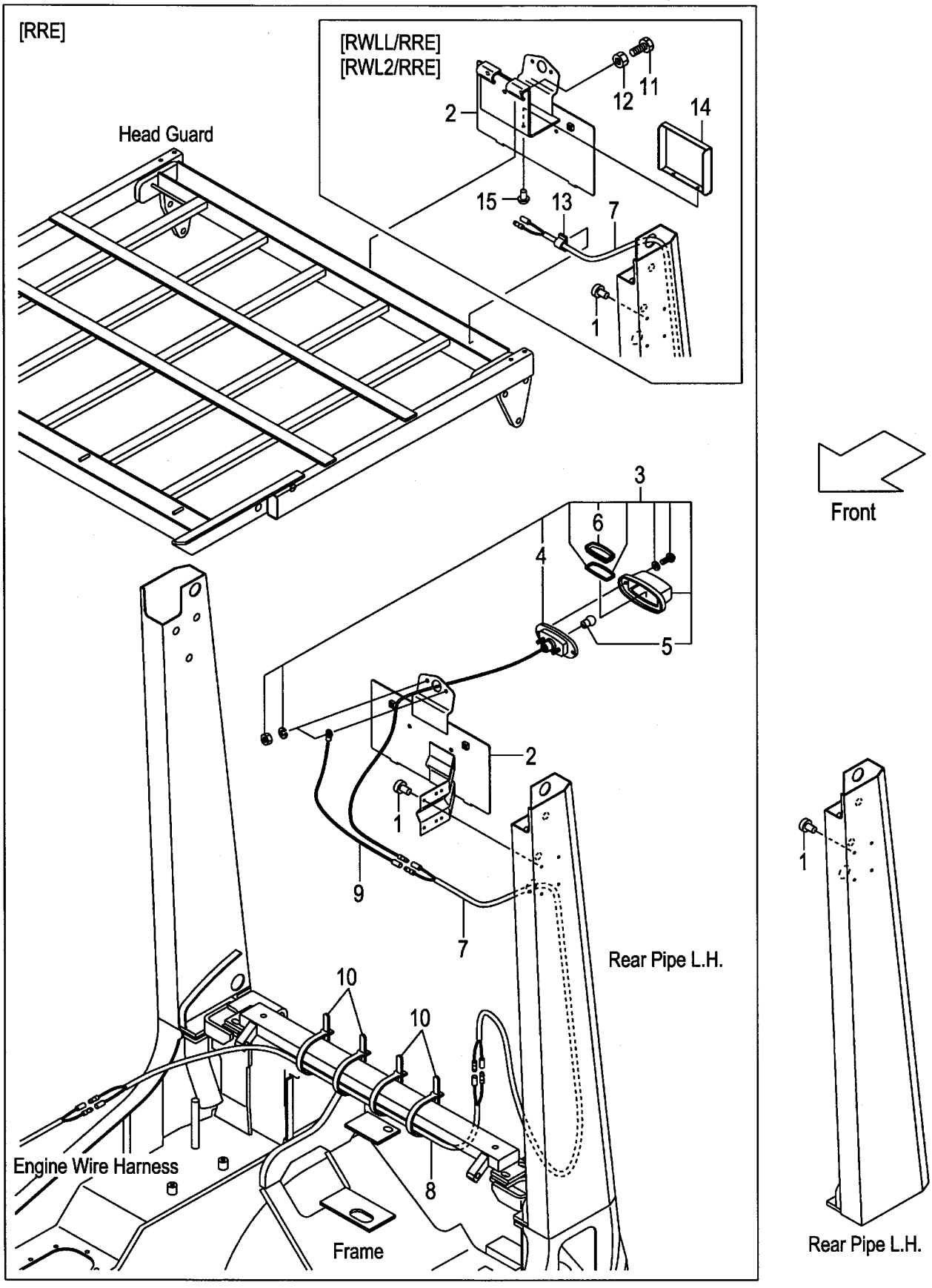

A:FG20C17 FG20T17 FG25C17 FG25T17:1-11022 C:FD20C17 FD20T17 FD25C17 FD25T17:1-11011
B:FG20C6 FG20T6 FG25C6 FG25T6 FG20W6 FG25W6:1-65505 D:FD20C6 FD20T6 FD25C6 FD25T6 FD20W6 FD25W6:1-84063

Item No	Part No.	Mark	Description		Req'd	Remarks : Serial No.
1	25596-42361		RIVET,NYLON	ﾘﾍﾞｯﾄ	4	
-	22256-42001		RIVET	ﾘﾍﾞｯﾄ	4	[RRE][RWLL/RRE][RWL2/RRE]
2	509P9-90101		BRACKET,NUMBER-PLATE	ﾌﾞﾗｹｯﾄ	1	[RRE]
-	533A0-52051		BRACKET,NUMBER-PLATE	ﾌﾞﾗｹｯﾄ	1	[RWLL/RRE][RWL2/RRE]
3	22132-40202		LAMP,LICENCE	ﾗﾝﾌﾟ	1	[RRE][RWLL/RRE][RWL2/RRE]
						INC.4-6
4	NO PART NO.	#	BODY	ﾎﾞﾃﾞｨ	1	[RRE][RWLL/RRE][RWL2/RRE]
5	22132-40041		BULB,12V/10W	ﾊﾞﾙﾌﾞ	1	[RRE][RWLL/RRE][RWL2/RRE]
6	22192-42411		LENS,PLASTIC	ﾚﾝｽﾞ	1	[RRE][RWLL/RRE][RWL2/RRE]
7	516G9-92101		WIRE-HARNESS,LICENCE	ﾜｲﾔﾊｰﾈｽ	1	[RRE]
-	534A9-92131		WIRE-HARNESS,LICENCE	ﾜｲﾔﾊｰﾈｽ	1	[RWLL/RRE][RWL2/RRE]
8	558A9-92001		WIRE-HARNESS,LICENCE	ﾜｲﾔﾊｰﾈｽ	1	[RRE][RWLL/RRE][RWL2/RRE]
9	222A2-42511		WIRE,LEAD	ﾜｲﾔ	1	[RRE][RWLL/RRE][RWL2/RRE]
10	04913-11120		BAND	ﾊﾞﾝﾄﾞ	4	[RRE][RWLL/RRE][RWL2/RRE]
11	01100-08020		BOLT	ﾎﾞﾙﾄ	3	[RWLL/RRE][RWL2/RRE]
12	01400-00008		NUT	ﾅｯﾄ	3	[RWLL/RRE][RWL2/RRE]
13	27732-42311		CLAMP,HARNESS	ｸﾗﾝﾌﾟ	1	[RWLL/RRE][RWL2/RRE]
14	539A9-92051		COVER,BOLT	ｶﾊﾞｰ	1	[RWLL/RRE][RWL2/RRE]
15	25596-42361		RIVET,NYLON	ﾘﾍﾞｯﾄ	2	[RWLL/RRE][RWL2/RRE]

FIG.51A LICENSE LIGHT

(F50224L1) ライセンスライト

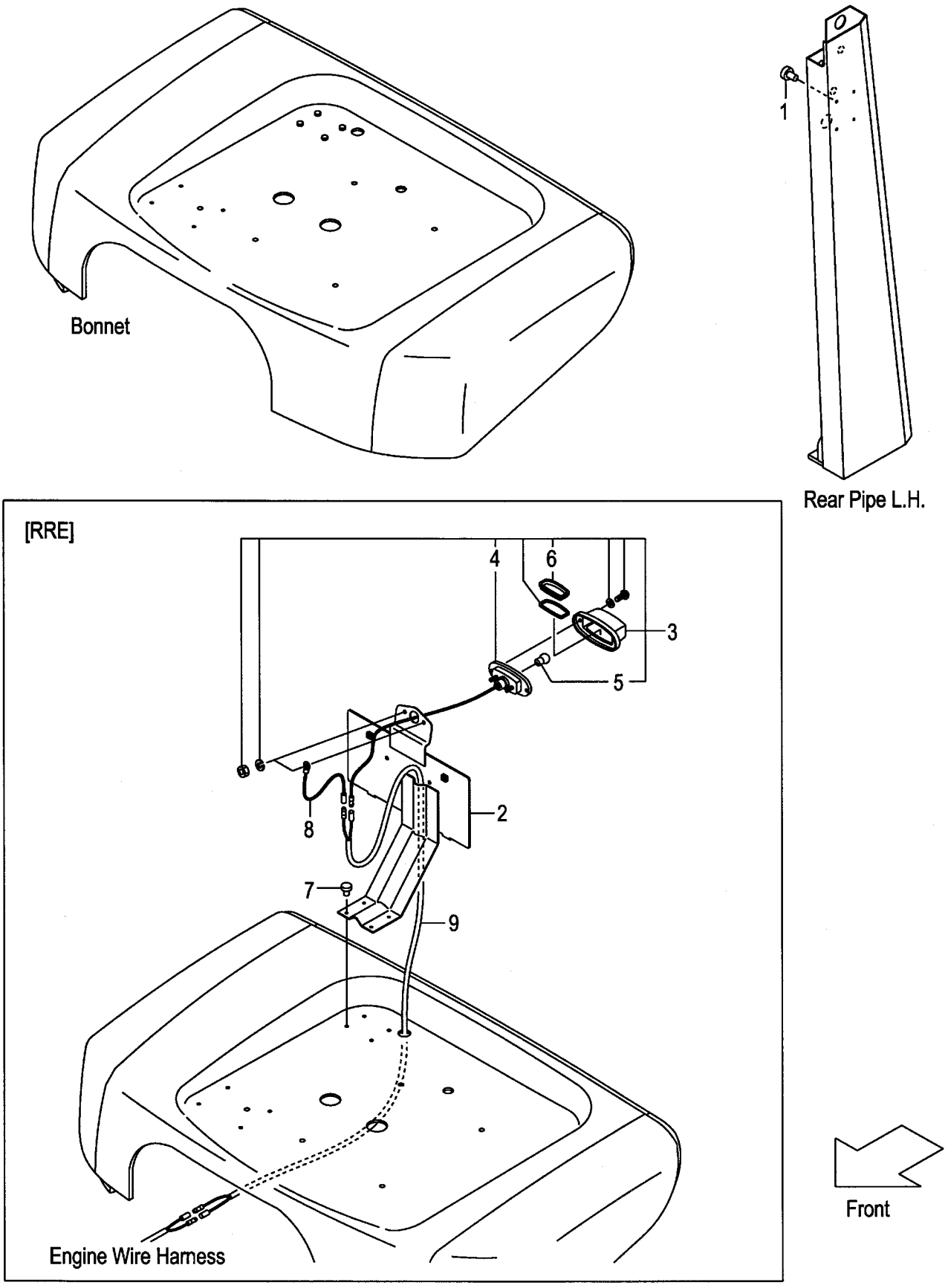

A:FG20C17 FG20T17 FG25C17 FG25T17:11023- C:FD20C17 FD20T17 FD25C17 FD25T17:11012-
B:FG20C6 FG20T6 FG25C6 FG25T6 FG20W6 FG25W6:65506- D:FD20C6 FD20T6 FD25C6 FD25T6 FD20W6 FD25W6:84064-

Item No	Part No.	Mark	Description		Req'd	Remarks : Serial No.
1	25596-42361		RIVET,NYLON	ﾘﾍﾞｯﾄ	4	
-	25596-42361		RIVET,NYLON	ﾘﾍﾞｯﾄ	4	[RRE]
2	539A9-92101		BRACKET,NUMBER-PLATE	ﾌﾞﾗｹｯﾄ	1	[RRE]
3	22132-40202		LAMP,LICENCE	ﾗﾝﾌﾟ	1	[RRE] INC.4-6
4	NO PART NO.	#	BODY	ﾎﾞﾃﾞｨ	1	[RRE]
5	22132-40041		BULB,12V/10W	ﾊﾞﾙﾌﾞ	1	[RRE]
6	22192-42411		LENS,PLASTIC	ﾚﾝｽﾞ	1	[RRE]
7	22256-42001		RIVET	ﾘﾍﾞｯﾄ	4	[RRE]
8	222A2-42511		WIRE,LEAD	ﾜｲﾔ	1	[RRE]
9	558A9-92001		WIRE-HARNESS,LICENCE	ﾜｲﾔﾊｰﾈｽ	1	[RRE]

FIG.52 LICENSE LIGHT [SCB001/RRE]

(F50224M0) ライセンスライト

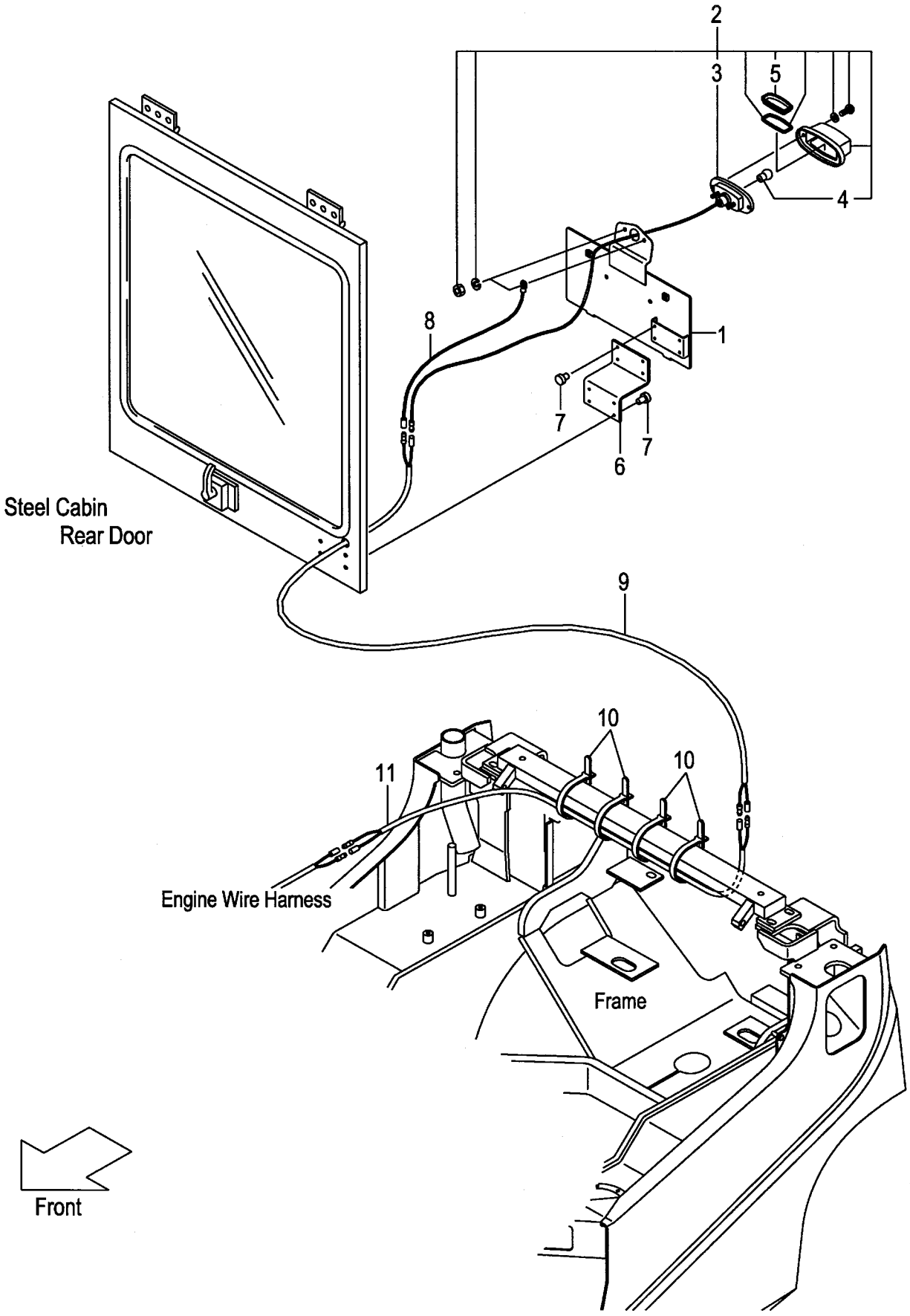

FIG.52
(F50224M0)

A:FG20C6 FG20T6 FG25C6 FG25T6 FG20W6 FG25W6
B:FD20C6 FD20T6 FD25C6 FD25T6 FD20W6 FD25W6

Item No	Part No.	Mark	Description	Req'd	Remarks : Serial No.
1	531A0-52521		BRACKET,NUMBER-PLATE ﾌﾞﾗｹｯﾄ	1	[SCB001/RRE]
2	22132-40202		LAMP,LICENCE ﾗﾝﾌﾟ	1	[SCB001/RRE] INC.3-5
3	NO PART NO.	#	BODY ﾎﾞﾃﾞｨ	1	[SCB001/RRE]
4	22132-40041		BULB,12V/10W ﾊﾞﾙﾌﾞ	1	[SCB001/RRE]
5	22192-42411		LENS,PLASTIC ﾚﾝｽﾞ	1	[SCB001/RRE]
6	539A5-32361		BRACKET ﾌﾞﾗｹｯﾄ	1	[SCB001/RRE]
7	22256-42001		RIVET ﾘﾍﾞｯﾄ	8	[SCB001/RRE]
8	222A2-42511		WIRE,LEAD ﾜｲﾔ	1	[SCB001/RRE]
9	534A9-92131		WIRE-HARNESS,LICENCE ﾜｲﾔﾊｰﾈｽ	1	[SCB001/RRE]
10	04913-11120		BAND ﾊﾞﾝﾄﾞ	4	[SCB001/RRE]
11	558A9-92001		WIRE-HARNESS,LICENCE ﾜｲﾔﾊｰﾈｽ	1	[SCB001/RRE]

FIG.53 LICENSE LIGHT [RRE/RW]

(F50224N0) ライセンスライト

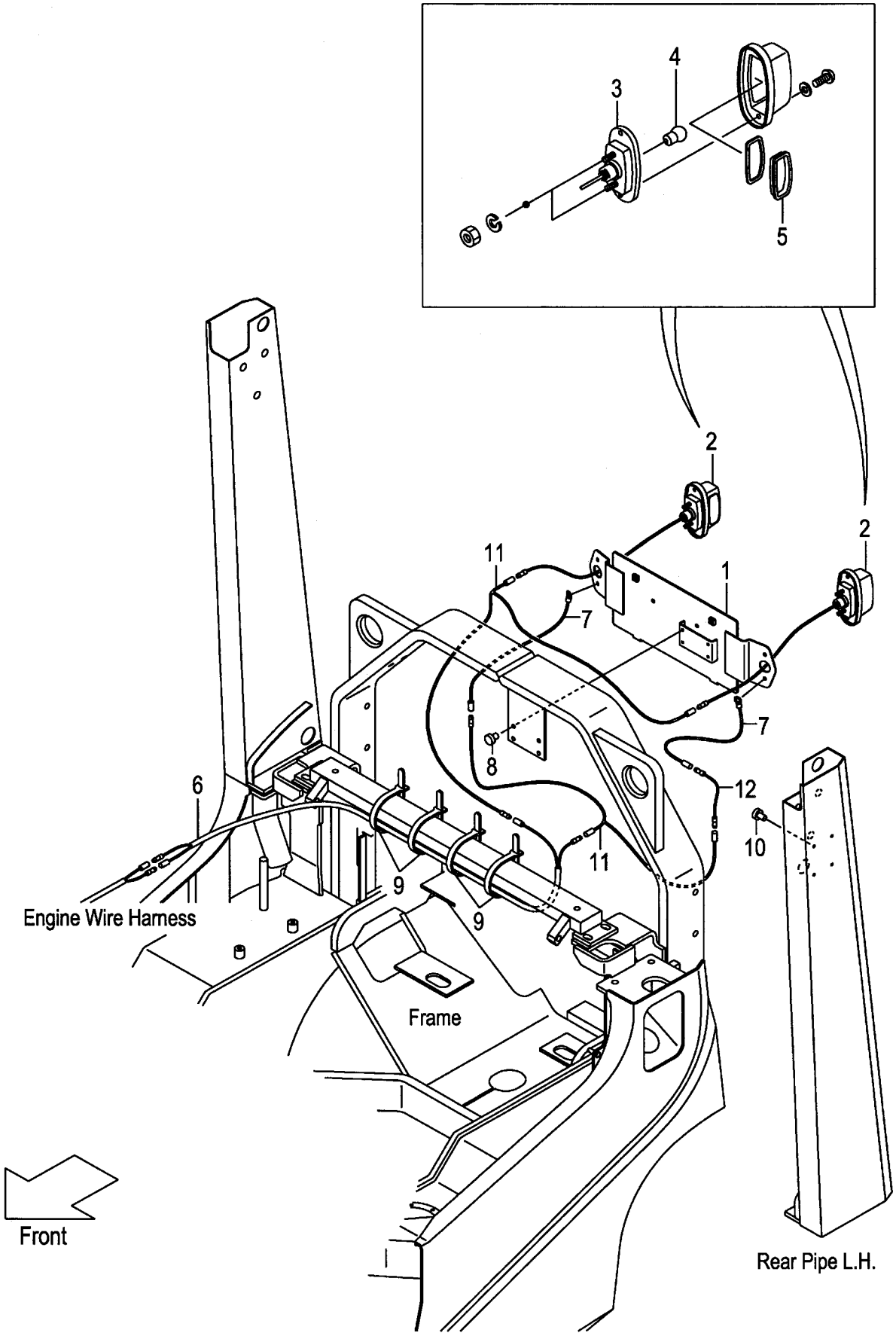

A:FG25C6 FG25T6 FG25W6
B:FD25C6 FD25T6 FD25W6

FIG.53
(F50224N0)

Item No	Part No.	Mark	Description	Req'd	Remarks : Serial No.
1	539C1-90151		BRACKET,NUMBER-PLATE ﾌﾞﾗｹｯﾄ	1	[RRE/RW]
2	22132-40202		LAMP,LICENCE ﾗﾝﾌﾟ	2	[RRE/RW] INC.3-5
3	NO PART NO.	#	BODY ﾎﾞﾃﾞｨ	2	[RRE/RW]
4	22132-40041		BULB,12V/10W ﾊﾞﾙﾌﾞ	2	[RRE/RW]
5	22192-42411		LENS,PLASTIC ﾚﾝｽﾞ	2	[RRE/RW]
6	534A9-92131		WIRE-HARNESS,LICENCE ﾜｲﾔﾊｰﾈｽ	1	[RRE/RW]
7	222A2-42511		WIRE,LEAD ﾜｲﾔ	2	[RRE/RW]
8	22256-42001		RIVET ﾘﾍﾞｯﾄ	4	[RRE/RW]
9	04913-11120		BAND ﾊﾞﾝﾄﾞ	4	[RRE/RW]
10	25596-42361		RIVET,NYLON ﾘﾍﾞｯﾄ	4	[RRE/RW]
11	25952-42311		WIRE,LEAD ﾜｲﾔ	2	[RRE/RW]
12	516G1-42211		WIRE,LEAD ﾜｲﾔ	1	[RRE/RW]

FIG.54 LICENSE LIGHT [TUE/RRE][RRE/(LPG,LPO,CNG)]

(F50224P0) ライセンスライト

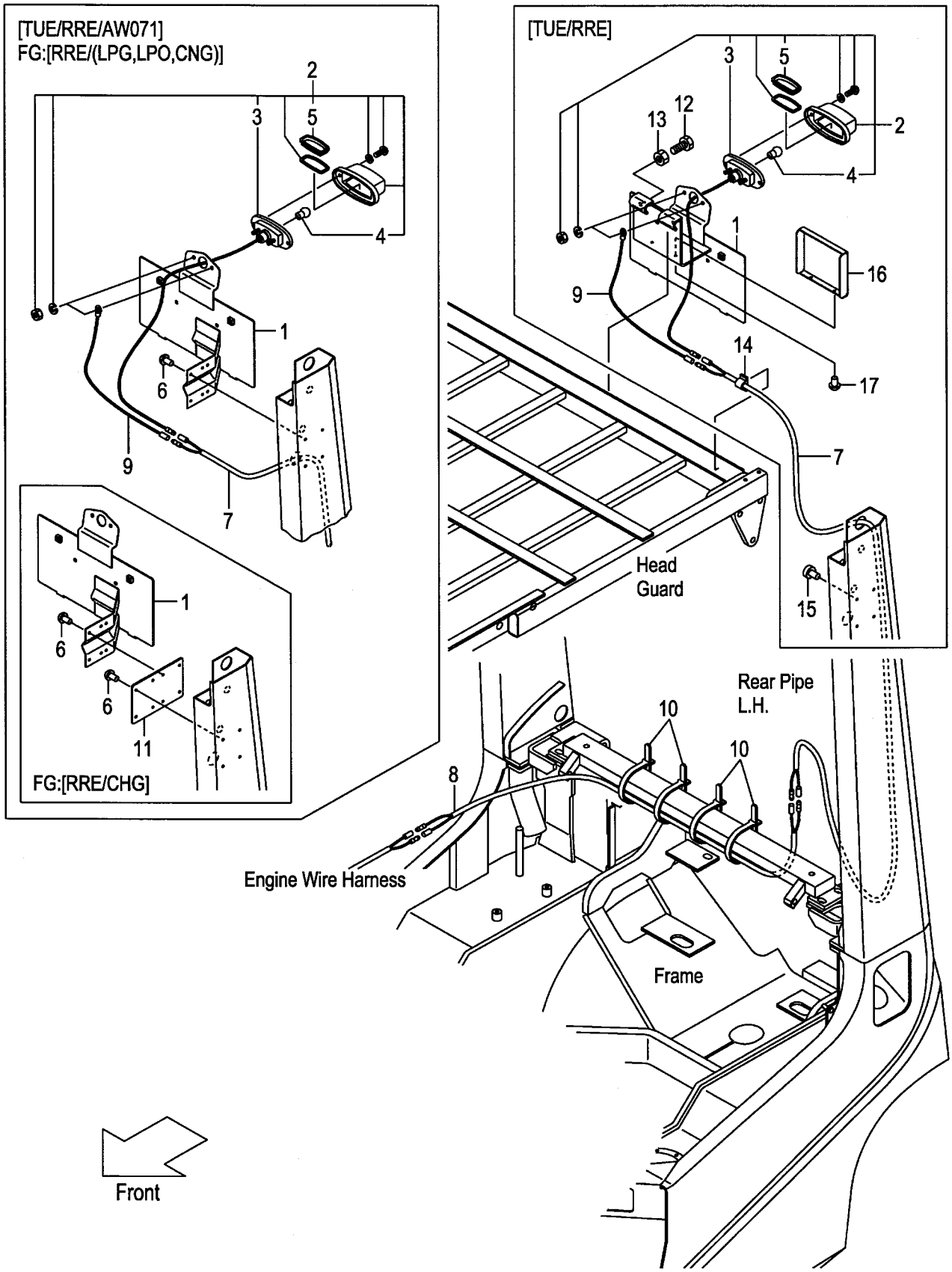

A:FG20C17 FG20T17 FG25C17 FG25T17 D:FD20C17 FD20T17 FD25C17 FD25T17
B:FG20C6 FG20T6 FG20W6 E:FD20C6 FD20T6 FD20W6
C:FG25C6 FG25T6 FG25W6 F:FD25C6 FD25T6 FD25W6

FIG.54
(F50224P0)

Item No	Part No.	Mark	Description	Req'd	Remarks : Serial No.
1	533A0-52051		BRACKET,NUMBER-PLATE ﾌﾞﾗｹｯﾄ	1	A:11023- B,C:65506- D:11012- E,F:84064- [TUE/RRE]
-	509P9-90101		BRACKET,NUMBER-PLATE ﾌﾞﾗｹｯﾄ	1	A:11023- B,C:65506- D:11012- E,F:84064- [TUE/RRE/AW071]
-	509P9-90101		BRACKET,NUMBER-PLATE ﾌﾞﾗｹｯﾄ	1	A:11023- B,C:65506- [RRE/LPG][RRE/LPO]
-	509P9-90101		BRACKET,NUMBER-PLATE ﾌﾞﾗｹｯﾄ	1	C [RRE/CNG]
2	22132-40202		LAMP,LICENCE ﾗﾝﾌﾟ	1	A:11023- B,C:65506- D:11012- E,F:84064- [TUE/RRE] INC.3-5
-	22132-40202		LAMP,LICENCE ﾗﾝﾌﾟ	1	A:11023- B,C:65506- [RRE/LPG][RRE/LPO] INC.3-5
-	22132-40202		LAMP,LICENCE ﾗﾝﾌﾟ	1	C [RRE/CNG] INC.3-5
3	NO PART NO.	#	BODY ﾎﾞﾃﾞｨ	1	A:11023- B,C:65506- D:11012- E,F:84064- [TUE/RRE]
-	NO PART NO.	#	BODY ﾎﾞﾃﾞｨ	1	A:11023- B,C:65506- [RRE/LPG][RRE/LPO]
-	NO PART NO.	#	BODY ﾎﾞﾃﾞｨ	1	C [RRE/CNG]
4	22132-40041		BULB,12V/10W ﾊﾞﾙﾌﾞ	1	A:11023- B,C:65506- D:11012- E,F:84064- [TUE/RRE]
-	22132-40041		BULB,12V/10W ﾊﾞﾙﾌﾞ	1	A:11023- B,C:65506- [RRE/LPG][RRE/LPO]
-	22132-40041		BULB,12V/10W ﾊﾞﾙﾌﾞ	1	C [RRE/CNG]
5	22192-42411		LENS,PLASTIC ﾚﾝｽﾞ	1	A:11023- B,C:65506- D:11012- E,F:84064- [TUE/RRE]

FIG.54 LICENSE LIGHT [TUE/RRE][RRE/(LPG,LPO,CNG)]

(F50224P0) ライセンスライト

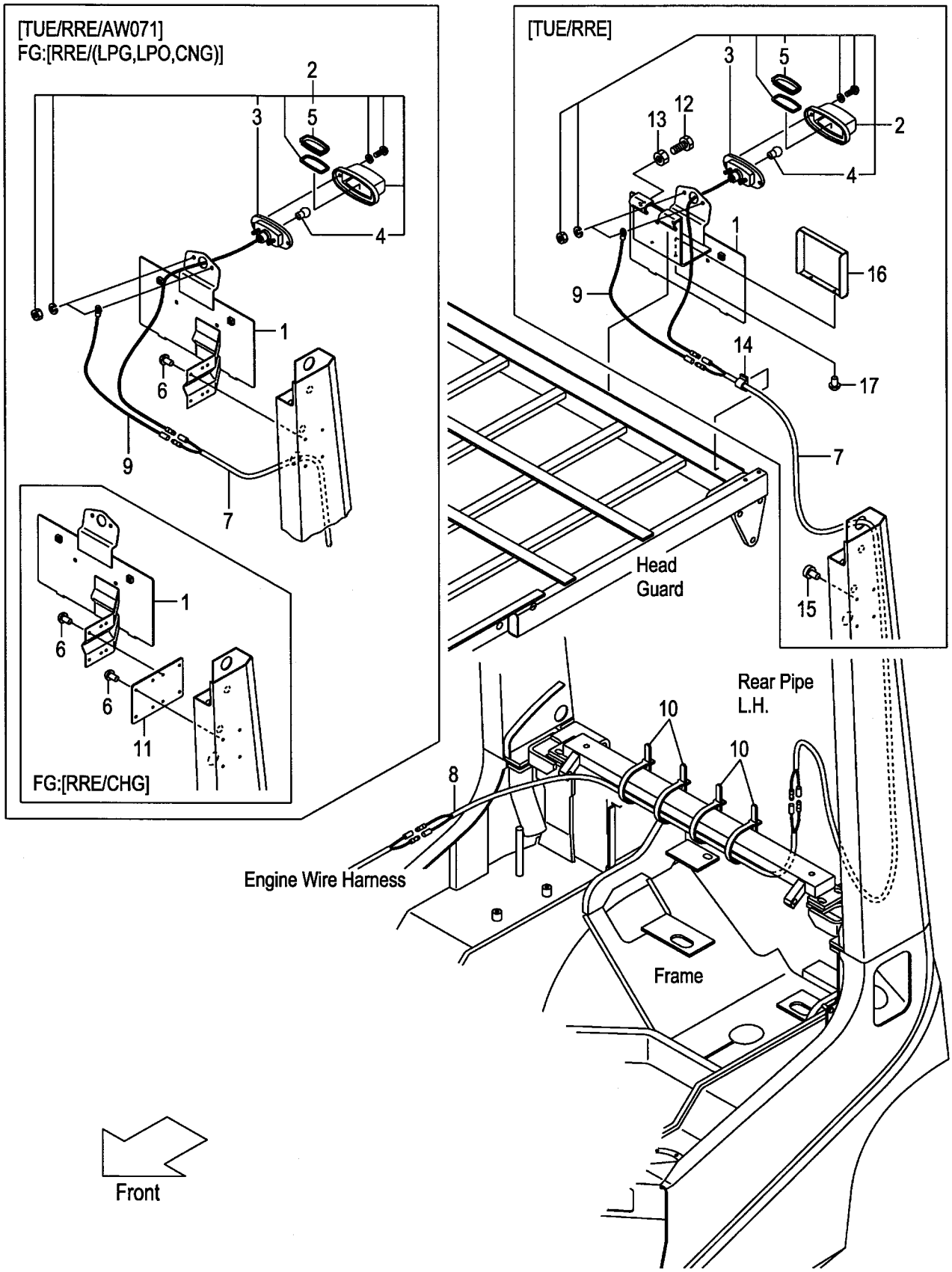

FIG.54
(F50224P0)

Item No	Part No.	Mark	Description		Req'd	Remarks : Serial No.
-	22192-42411		LENS,PLASTIC	ﾚﾝｽﾞ	1	A:11023- B,C:65506- [RRE/LPG][RRE/LPO]
-	22192-42411		LENS,PLASTIC	ﾚﾝｽﾞ	1	C [RRE/CNG]
6	22256-42001		RIVET	ﾘﾍﾞｯﾄ	4	A:11023- B,C:65506- D:11012- E,F:84064- [TUE/RRE/AW071]
-	22256-42001		RIVET	ﾘﾍﾞｯﾄ	4	A:11023- B,C:65506- [RRE/LPG][RRE/LPO]
-	22256-42001		RIVET	ﾘﾍﾞｯﾄ	8	C [RRE/CNG]
7	534A9-92131		WIRE-HARNESS,LICENCE	ﾜｲﾔﾊｰﾈｽ	1	A:11023- B,C:65506- D:11012- E,F:84064- [TUE/RRE]
-	516G9-92101		WIRE-HARNESS,LICENCE	ﾜｲﾔﾊｰﾈｽ	1	A:11023- B,C:65506- D:11012- E,F:84064- [TUE/RRE/AW071]
-	516G9-92101		WIRE-HARNESS,LICENCE	ﾜｲﾔﾊｰﾈｽ	1	A:11023- B,C:65506- [RRE/LPG][RRE/LPO]
-	516G9-92101		WIRE-HARNESS,LICENCE	ﾜｲﾔﾊｰﾈｽ	1	C [RRE/CNG]
8	558A9-92001		WIRE-HARNESS,LICENCE	ﾜｲﾔﾊｰﾈｽ	1	A:11023- B,C:65506- D:11012- E,F:84064- [TUE/RRE]
-	558A9-92001		WIRE-HARNESS,LICENCE	ﾜｲﾔﾊｰﾈｽ	1	A:11023- B,C:65506- [RRE/LPG][RRE/LPO]
-	558A9-92001		WIRE-HARNESS,LICENCE	ﾜｲﾔﾊｰﾈｽ	1	C [RRE/CNG]
9	222A2-42511		WIRE,LEAD	ﾜｲﾔ	1	A:11023- B,C:65506- D:11012- E,F:84064- [TUE/RRE]
-	222A2-42511		WIRE,LEAD	ﾜｲﾔ	1	A:11023- B,C:65506- [RRE/LPG][RRE/LPO]
-	222A2-42511		WIRE,LEAD	ﾜｲﾔ	1	C [RRE/CNG]

FIG.54 LICENSE LIGHT [TUE/RRE][RRE/(LPG,LPO,CNG)]

(F50224P0) ライセンスライト

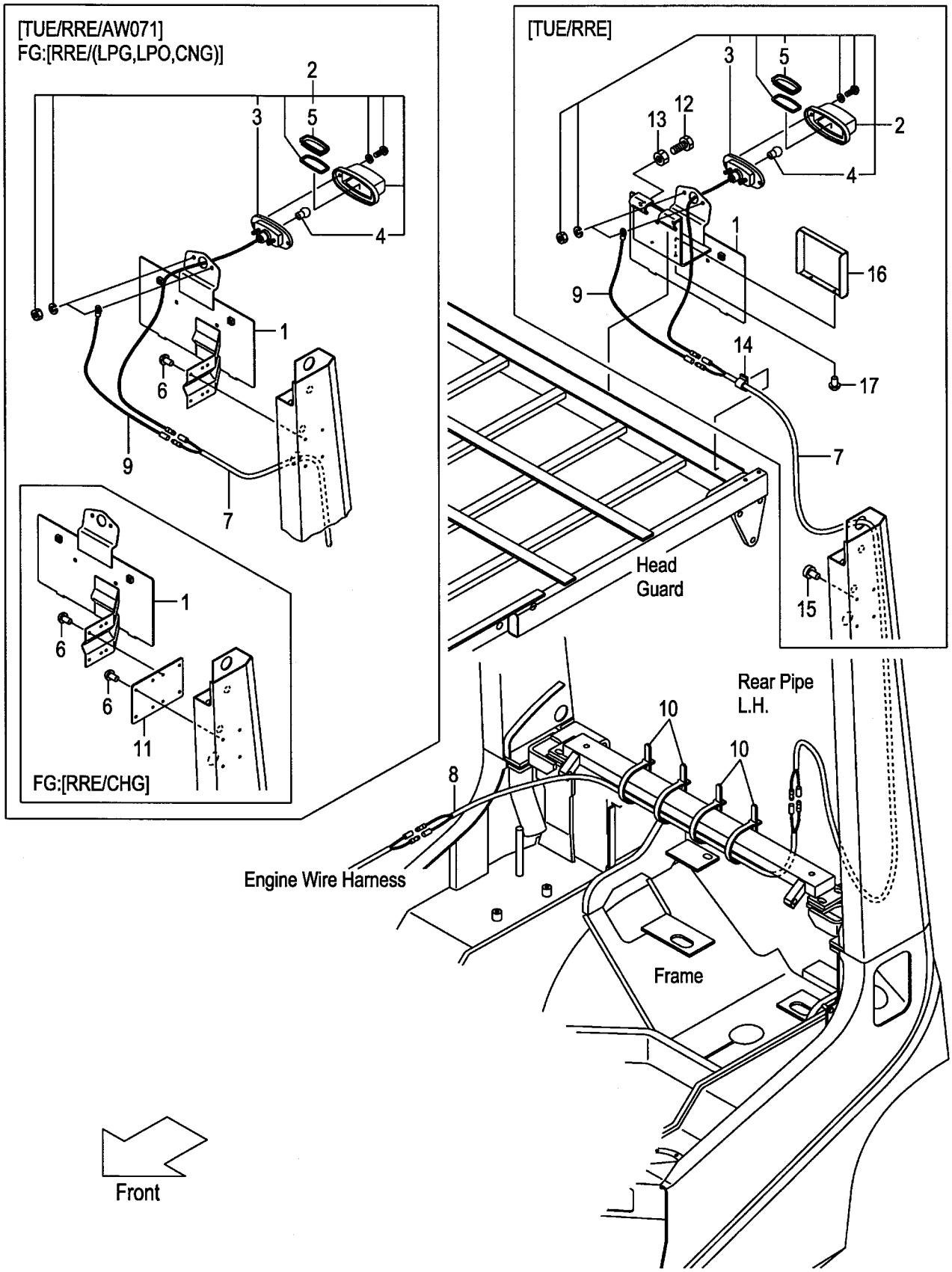

A:FG20C17 FG20T17 FG25C17 FG25T17 D:FD20C17 FD20T17 FD25C17 FD25T17
B:FG20C6 FG20T6 FG20W6 E:FD20C6 FD20T6 FD20W6
C:FG25C6 FG25T6 FG25W6 F:FD25C6 FD25T6 FD25W6

FIG.54
(F50224P0)

Item No	Part No.	Mark	Description		Req'd	Remarks : Serial No.
10	04913-11120		BAND	ﾊﾞﾝﾄﾞ	4	A:11023- B,C:65506- D:11012- E,F:84064- [TUE/RRE]
-	04913-11120		BAND	ﾊﾞﾝﾄﾞ	4	A:11023- B,C:65506- [RRE/LPG][RRE/LPO]
-	04913-11120		BAND	ﾊﾞﾝﾄﾞ	4	C [RRE/CNG]
11	539C1-92611		BRACKET	ﾌﾞﾗｹｯﾄ	1	C [RRE/CNG]
12	01100-08020		BOLT	ﾎﾞﾙﾄ	3	A:11023- B,C:65506- D:11012- E,F:84064- [TUE/RRE] (WITHOUT TUE/RRE/AW071)
13	01400-00008		NUT	ﾅｯﾄ	3	A:11023- B,C:65506- D:11012- E,F:84064- [TUE/RRE] (WITHOUT TUE/RRE/AW071)
14	27732-42311		CLAMP,HARNESS	ｸﾗﾝﾌﾟ	1	A:11023- B,C:65506- D:11012- E,F:84064- [TUE/RRE] (WITHOUT TUE/RRE/AW071)
15	25596-42361		RIVET,NYLON	ﾘﾍﾞｯﾄ	4	A:11023- B,C:65506- D:11012- E,F:84064- [TUE/RRE] (WITHOUT TUE/RRE/AW071)
16	539A9-92051		COVER,BOLT	ｶﾊﾞｰ	1	[TUE/RRE] (WITHOUT TUE/RRE/AW071)
17	25596-42361		RIVET,NYLON	ﾘﾍﾞｯﾄ	2	[TUE/RRE] (WITHOUT TUE/RRE/AW071)

FIG.55 REAR WORKING LIGHT [RWLR]

(F50224Q0) リヤーワーキング゛ライト

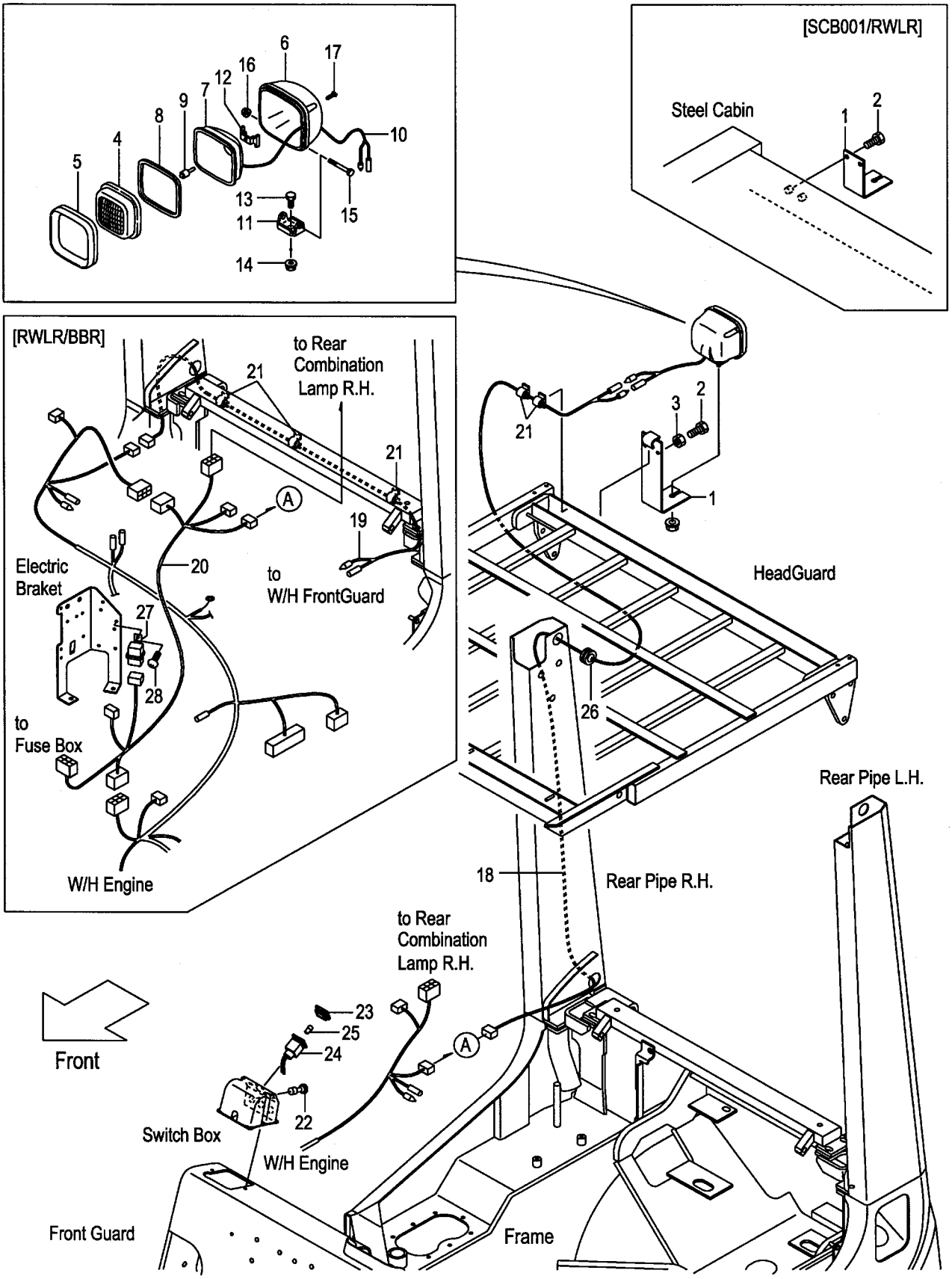

A:FG20C17 FG20T17 FG25C17 FG25T17 C:FD20C17 FD20T17 FD25C17 FD25T17
B:FG20C6 FG20T6 FG25C6 FG25T6 FG20W6 FG25W6 D:FD20C6 FD20T6 FD25C6 FD25T6 FD20W6 FD25W6

Item No	Part No.	Mark	Description		Req'd	Remarks : Serial No.
1	516G1-42151		BRACKET,REAR-LAMP	ﾌﾞﾗｹｯﾄ	1	[RWLR]
-	539A1-42201		BRACKET,REAR-LAMP	ﾌﾞﾗｹｯﾄ	1	[RWLR/AW061]
-	530C1-42001		BRACKET,REAR-LAMP	ﾌﾞﾗｹｯﾄ	1	B,D
						[SCB001/RWLR]
2	01100-08020		BOLT	ﾎﾞﾙﾄ	3	[RWLR]
-	01185-08020		BOLT	ﾎﾞﾙﾄ	2	B,D
						[SCB001/RWLR]
3	01400-00008		NUT	ﾅｯﾄ	3	[RWLR](WITHOUT SCB001/RWLR)
A1	216G2-40602		LAMP-ASSY,HEAD	ﾍｯﾄﾞﾗﾝﾌﾟｱｯｾﾝ	1	[RWLR] INC.4-17
4	216G2-43502		LENS	ﾚﾝｽﾞ	1	[RWLR]
5	216G2-43631		RIM	ﾘﾑ	1	[RWLR]
6	NO PART NO.	#	HOUSING	ﾊｳｼﾞﾝｸﾞ	1	[RWLR]
7	NO PART NO.	#	REFLECTOR	ﾘﾌﾚｸﾀ	1	[RWLR]
8	216G2-43531		GASKET	ｶﾞｽｹｯﾄ	1	[RWLR]
9	216G2-43542		BULB,12V/55W	ﾊﾞﾙﾌﾞ	1	[RWLR]
10	216G2-43551		WIRE,LEAD	ﾜｲﾔ	1	[RWLR]
11	216G2-43562		BRACKET	ﾌﾞﾗｹｯﾄ	1	[RWLR]
12	216G2-43571		SPRING	ｽﾌﾟﾘﾝｸﾞ	1	[RWLR]
13	216G2-43582		BOLT	ﾎﾞﾙﾄ	1	[RWLR]
14	216G2-43592		NUT	ﾅｯﾄ	1	[RWLR]
15	216G2-43602		BOLT	ﾎﾞﾙﾄ	1	[RWLR]
16	216G2-43611		NUT	ﾅｯﾄ	1	[RWLR]
17	216G2-43622		SCREW	ｽｸﾘｭ	4	[RWLR]
18	516G1-42101		WIRE,LEAD	ﾜｲﾔ	1	[RWLR]
19	516G1-42111		WIRE,LEAD	ﾜｲﾔ	1	[RWLR/BBR]
20	539A8-92111		WIRE,LEAD	ﾜｲﾔ	1	[RWLR/BBR]
21	27732-42311		CLAMP,HARNESS	ｸﾗﾝﾌﾟ	2	[RWLR]
-	27732-42311		CLAMP,HARNESS	ｸﾗﾝﾌﾟ	5	[RWLR/BBR]
22	22672-42501		SWITCH,LAMP	ｽｲｯﾁ	1	[RWLR]
A2	522A1-42051		LAMP-ASSY,PILOT	ﾊﾟｲﾛｯﾄﾗﾝﾌﾟｱｯｾﾝ	1	[RWLR] INC.23-25
23	522A1-42061		LENS	ﾚﾝｽﾞ	1	[RWLR]
24	NO PART NO.	#	HOLDER	ﾎﾙﾀﾞ	1	[RWLR]
25	23302-42311		BULB,12V/3.4W	ﾊﾞﾙﾌﾞ	1	[RWLR]
26	22679-47301		GROMMET	ｸﾞﾛﾒｯﾄ	1	[RWLR]
27	26062-42881		RELAY,12V	ﾘﾚｰ	1	[RWLR/BBR]
28	214A2-42611		SCREW	ｽｸﾘｭ	1	[RWLR/BBR]

FIG.56 REAR WORKING LIGHT [RWLL]

(F50224R0) リヤーワーキング゛ライト

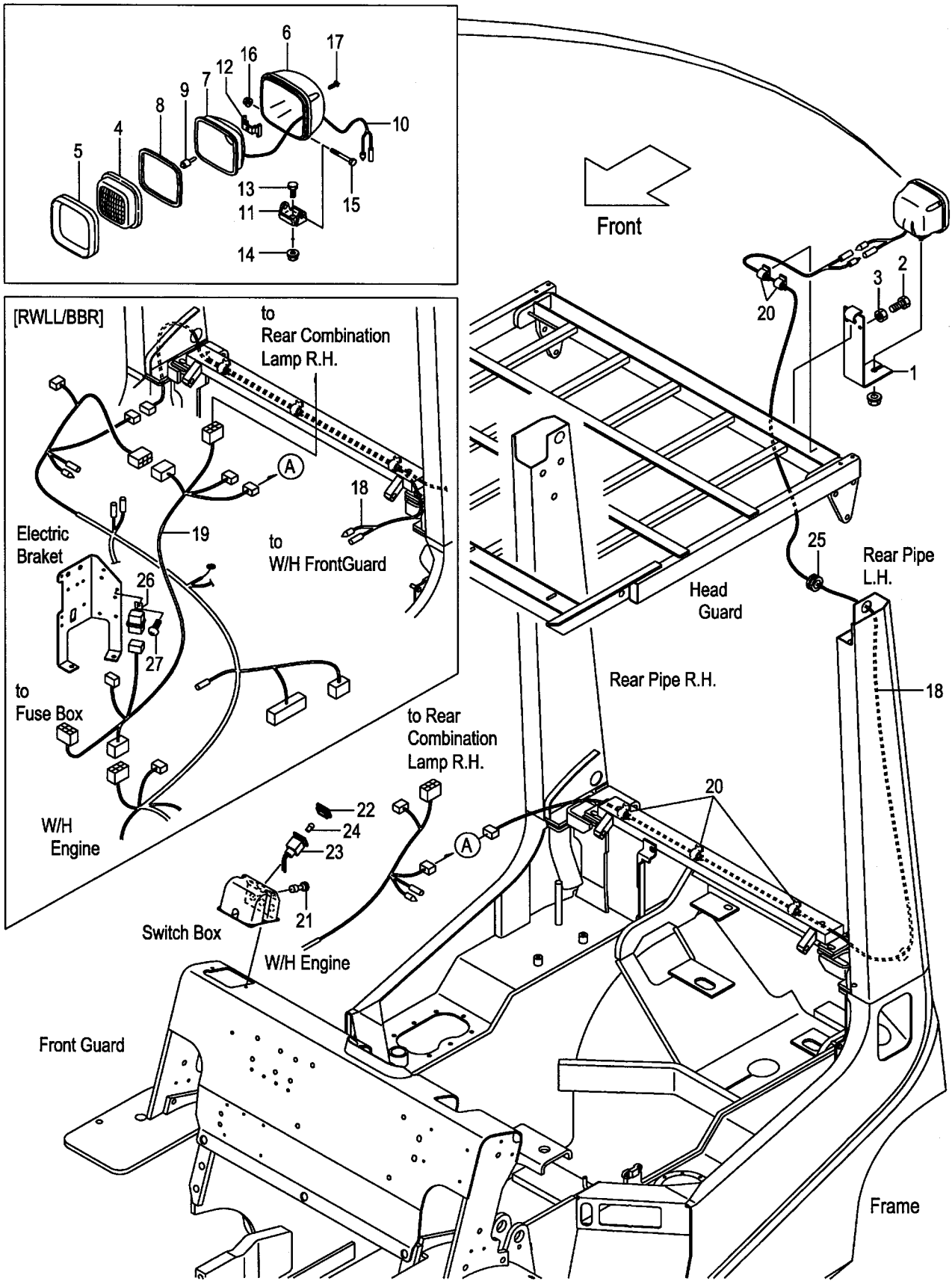

A:FG20C17 FG20T17 FG25C17 FG25T17 C:FD20C17 FD20T17 FD25C17 FD25T17
B:FG20C6 FG20T6 FG25C6 FG25T6 FG20W6 FG25W6 D:FD20C6 FD20T6 FD25C6 FD25T6 FD20W6 FD25W6

Item No	Part No.	Mark	Description		Req'd	Remarks : Serial No.
1	516G1-42151		BRACKET,REAR-LAMP	ﾌﾞﾗｹｯﾄ	1	[RWLL]
-	539A1-42201		BRACKET,REAR-LAMP	ﾌﾞﾗｹｯﾄ	1	[RWLL/AW061]
2	01100-08020		BOLT	ﾎﾞﾙﾄ	3	[RWLL]
3	01400-00008		NUT	ﾅｯﾄ	3	[RWLL]
A1	216G2-40602		LAMP-ASSY,HEAD	ﾍｯﾄﾞﾗﾝﾌﾟｱｯｾﾝ	1	[RWLL] INC.4-17
4	216G2-43502		LENS	ﾚﾝｽﾞ	1	[RWLL]
5	216G2-43631		RIM	ﾘﾑ	1	[RWLL]
6	NO PART NO.	#	HOUSING	ﾊｳｼﾞﾝｸﾞ	1	[RWLL]
7	NO PART NO.	#	REFLECTOR	ﾘﾌﾚｸﾀ	1	[RWLL]
8	216G2-43531		GASKET	ｶﾞｽｹｯﾄ	1	[RWLL]
9	216G2-43542		BULB,12V/55W	ﾊﾞﾙﾌﾞ	1	[RWLL]
10	216G2-43551		WIRE,LEAD	ﾜｲﾔ	1	[RWLL]
11	216G2-43562		BRACKET	ﾌﾞﾗｹｯﾄ	1	[RWLL]
12	216G2-43571		SPRING	ｽﾌﾟﾘﾝｸﾞ	1	[RWLL]
13	216G2-43582		BOLT	ﾎﾞﾙﾄ	1	[RWLL]
14	216G2-43592		NUT	ﾅｯﾄ	1	[RWLL]
15	216G2-43602		BOLT	ﾎﾞﾙﾄ	1	[RWLL]
16	216G2-43611		NUT	ﾅｯﾄ	1	[RWLL]
17	216G2-43622		SCREW	ｽｸﾘｭ	4	[RWLL]
18	516G1-42111		WIRE,LEAD	ﾜｲﾔ	1	[RWLL]
-	516G1-42111		WIRE,LEAD	ﾜｲﾔ	2	[RWLL/BBR]
19	539A8-92111		WIRE,LEAD	ﾜｲﾔ	1	[RWLL/BBR]
20	27732-42311		CLAMP,HARNESS	ｸﾗﾝﾌﾟ	5	[RWLL]
21	22672-42501		SWITCH,LAMP	ｽｲｯﾁ	1	[RWLL]
A2	522A1-42051		LAMP-ASSY,PILOT	ﾊﾟｲﾛｯﾄﾗﾝﾌﾟｱｯｾﾝ	1	[RWLL] INC.22-24
22	522A1-42061		LENS	ﾚﾝｽﾞ	1	[RWLL]
23	NO PART NO.	#	HOLDER	ﾎﾙﾀﾞ	1	[RWLL]
24	23302-42311		BULB,12V/3.4W	ﾊﾞﾙﾌﾞ	1	[RWLL]
25	22679-47301		GROMMET	ｸﾞﾛﾒｯﾄ	1	[RWLL]
26	26062-42881		RELAY,12V	ﾘﾚｰ	1	[RWLL/BBR]
27	214A2-42611		SCREW	ｽｸﾘｭ	1	[RWLL/BBR]

FIG.57 REAR WORKING LIGHT [RWL2]

(F50224S0) リヤーワーキング゛ライト

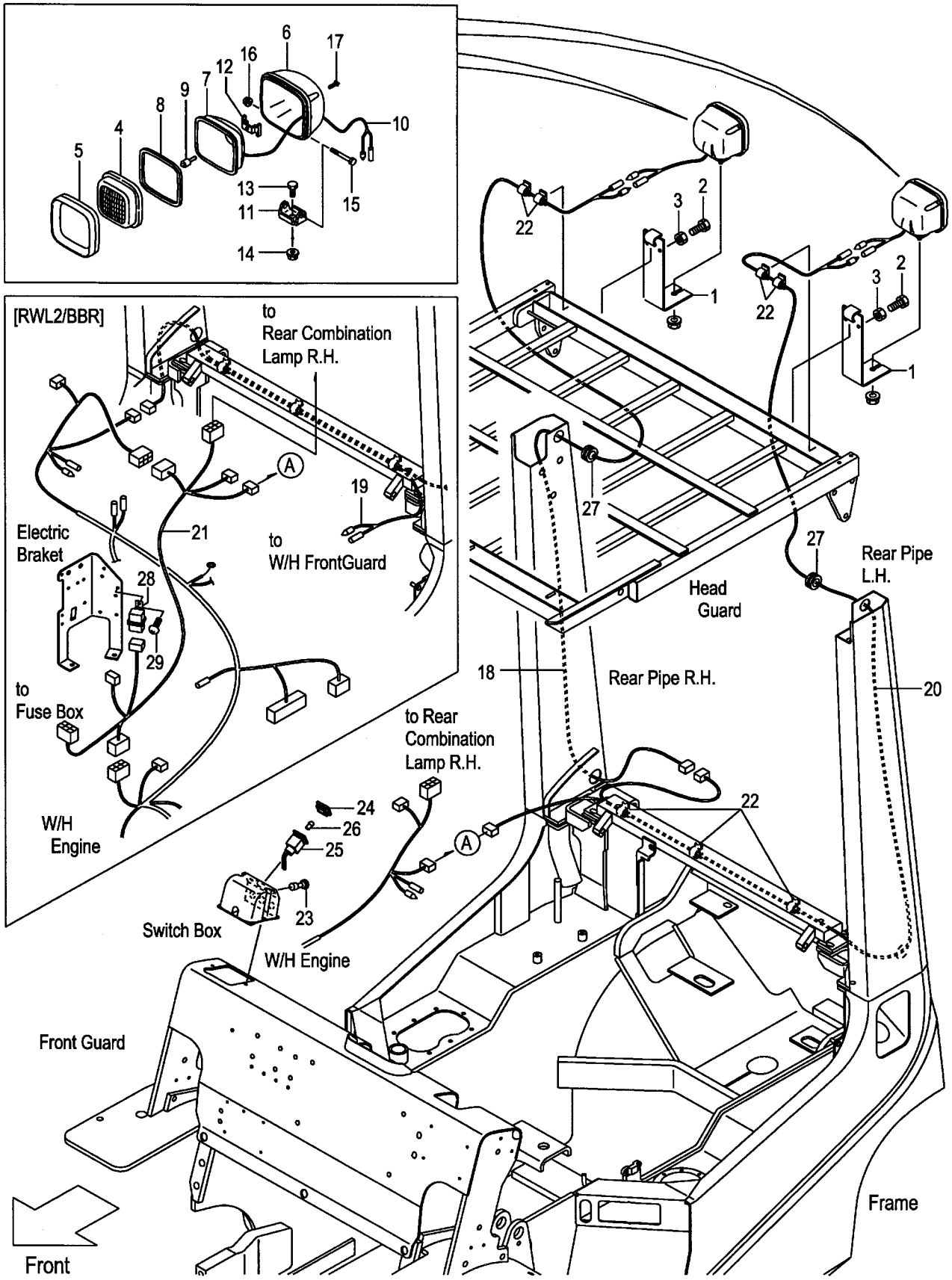

A:FG20C17 FG20T17 FG25C17 FG25T17 C:FD20C17 FD20T17 FD25C17 FD25T17
B:FG20C6 FG20T6 FG25C6 FG25T6 FG20W6 FG25W6 D:FD20C6 FD20T6 FD25C6 FD25T6 FD20W6 FD25W6

Item No	Part No.	Mark	Description		Req'd	Remarks : Serial No.
1	516G1-42151		BRACKET,REAR-LAMP	ﾌﾞﾗｹｯﾄ	2	[RWL2]
-	539A1-42201		BRACKET,REAR-LAMP	ﾌﾞﾗｹｯﾄ	2	[RWL2/AW061]
2	01100-08020		BOLT	ﾎﾞﾙﾄ	6	[RWL2]
3	01400-00008		NUT	ﾅｯﾄ	6	[RWL2]
A1	216G2-40602		LAMP-ASSY,HEAD	ﾍｯﾄﾞﾗﾝﾌﾟｱｯｾﾝ	2	[RWL2] INC.4-17
4	216G2-43502		LENS	ﾚﾝｽﾞ	2	[RWL2]
5	216G2-43631		RIM	ﾘﾑ	2	[RWL2]
6	NO PART NO.	#	HOUSING	ﾊｳｼﾞﾝｸﾞ	2	[RWL2]
7	NO PART NO.	#	REFLECTOR	ﾘﾌﾚｸﾀ	2	[RWL2]
8	216G2-43531		GASKET	ｶﾞｽｹｯﾄ	2	[RWL2]
9	216G2-43542		BULB,12V/55W	ﾊﾞﾙﾌﾞ	2	[RWL2]
10	216G2-43551		WIRE,LEAD	ﾜｲﾔ	2	[RWL2]
11	216G2-43562		BRACKET	ﾌﾞﾗｹｯﾄ	2	[RWL2]
12	216G2-43571		SPRING	ｽﾌﾟﾘﾝｸﾞ	2	[RWL2]
13	216G2-43582		BOLT	ﾎﾞﾙﾄ	2	[RWL2]
14	216G2-43592		NUT	ﾅｯﾄ	2	[RWL2]
15	216G2-43602		BOLT	ﾎﾞﾙﾄ	2	[RWL2]
16	216G2-43611		NUT	ﾅｯﾄ	2	[RWL2]
17	216G2-43622		SCREW	ｽｸﾘｭ	8	[RWL2]
18	516G1-42101		WIRE,LEAD	ﾜｲﾔ	1	[RWL2]
19	516G1-42111		WIRE,LEAD	ﾜｲﾔ	1	[RWL2/BBR]
20	516G1-42121		WIRE,LEAD	ﾜｲﾔ	1	[RWL2]
21	539A8-92111		WIRE,LEAD	ﾜｲﾔ	1	[RWL2/BBR]
22	27732-42311		CLAMP,HARNESS	ｸﾗﾝﾌﾟ	7	[RWL2]
23	22672-42501		SWITCH,LAMP	ｽｲｯﾁ	1	[RWL2]
A2	522A1-42051		LAMP-ASSY,PILOT	ﾊﾟｲﾛｯﾄﾗﾝﾌﾟｱｯｾﾝ	1	[RWL2] INC.24-26
24	522A1-42061		LENS	ﾚﾝｽﾞ	1	[RWL2]
25	NO PART NO.	#	HOLDER	ﾎﾙﾀﾞ	1	[RWL2]
26	23302-42311		BULB,12V/3.4W	ﾊﾞﾙﾌﾞ	1	[RWL2]
27	22679-47301		GROMMET	ｸﾞﾛﾒｯﾄ	2	[RWL2]
28	26062-42881		RELAY,12V	ﾘﾚｰ	1	[RWL2/BBR]
29	214A2-42611		SCREW	ｽｸﾘｭ	1	[RWL2/BBR]

FIG.58 REVOLVING LIGHT [RLY][RLR]

(F50224T0) リボルビングライト

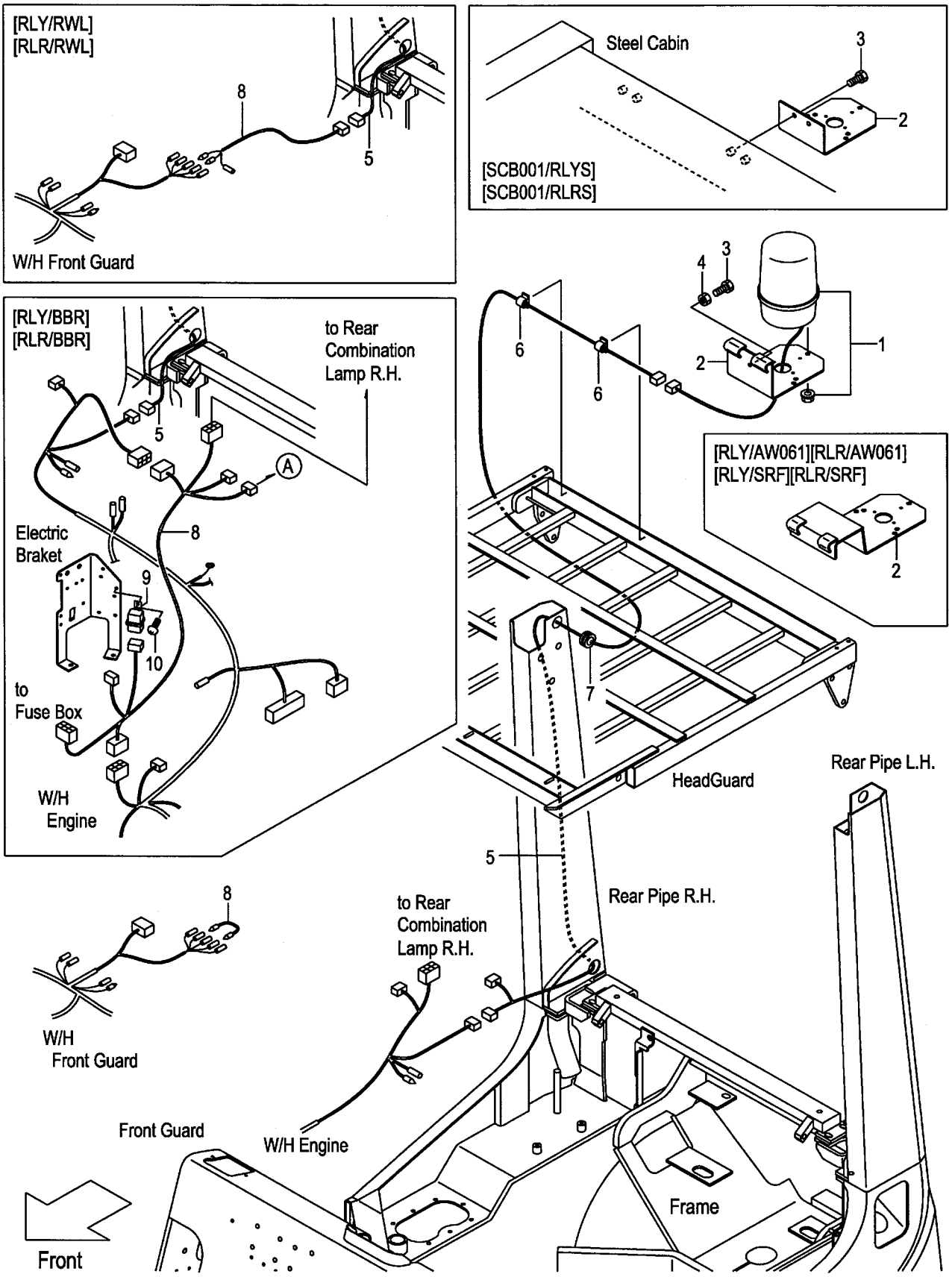

A:FG20C17 FG20T17 FG25C17 FG25T17 C:FD20C17 FD20T17 FD25C17 FD25T17
B:FG20C6 FG20T6 FG25C6 FG25T6 FG20W6 FG25W6 D:FD20C6 FD20T6 FD25C6 FD25T6 FD20W6 FD25W6

Item No	Part No.	Mark	Description		Req'd	Remarks : Serial No.
1	514A1-41001		LIGHT,REVOLVING	ﾗｲﾄ	1	[RLYS]
-	514A1-41011		LIGHT,REVOLVING	ﾗｲﾄ	1	[RLRS]
-	514A1-41021		LIGHT,REVOLVING	ﾗｲﾄ	1	[RLYM]
-	514A1-41031		LIGHT,REVOLVING	ﾗｲﾄ	1	[RLRM]
2	529F1-42251		BRACKET,REVOLVING	ﾌﾞﾗｹｯﾄ	1	[RLY][RLR]
-	529F1-42201		BRACKET,REVOLVING	ﾌﾞﾗｹｯﾄ	1	[RLY/BKTL][RLR/BKTL]
-	539A8-92251		BRACKET,REVOLVING	ﾌﾞﾗｹｯﾄ	1	[RLY/AW061][RLR/AW061] [RLY/SRF][RLR/SRF]
-	535C8-92051		BRACKET,REVOLVING	ﾌﾞﾗｹｯﾄ	1	B,D [SCB001/RLYS][SCB001/RLRS]
3	01100-08020		BOLT	ﾎﾞﾙﾄ	3	[RLY][RLR]
-	01185-08020		BOLT	ﾎﾞﾙﾄ	2	B,D [SCB001/RLYS][SCB001/RLRS]
4	01400-00008		NUT	ﾅｯﾄ	3	[RLY][RLR] (WITHOUT SCB001/RLYS, SCB001/RLRS)
5	516G8-92001		WIRE,LEAD	ﾜｲﾔ	1	[RLY][RLR]
-	514A1-42191		WIRE,LEAD	ﾜｲﾔ	1	[RLY/BBR][RLR/BBR][RLY/RWL] [RLR/RWL]
6	27732-42311		CLAMP,HARNESS	ｸﾗﾝﾌﾟ	2	[RLY][RLR]
7	22679-47301		GROMMET	ｸﾞﾛﾒｯﾄ	1	[RLY][RLR]
8	516G1-42211		WIRE,LEAD	ﾜｲﾔ	1	[RLY][RLR]
-	539A8-92111		WIRE,LEAD	ﾜｲﾔ	1	[RLY/BBR][RLR/BBR]
-	514A1-42041		WIRE,LEAD	ﾜｲﾔ	1	[RLY/RWL][RLR/RWL]
9	26062-42881		RELAY,12V	ﾘﾚｰ	1	[RLY/BBR][RLR/BBR]
10	214A2-42611		SCREW	ｽｸﾘｭ	1	[RLY/BBR][RLR/BBR]

FIG.59 SPOT LIGHT [SPL]

(F5022610) スポットライト

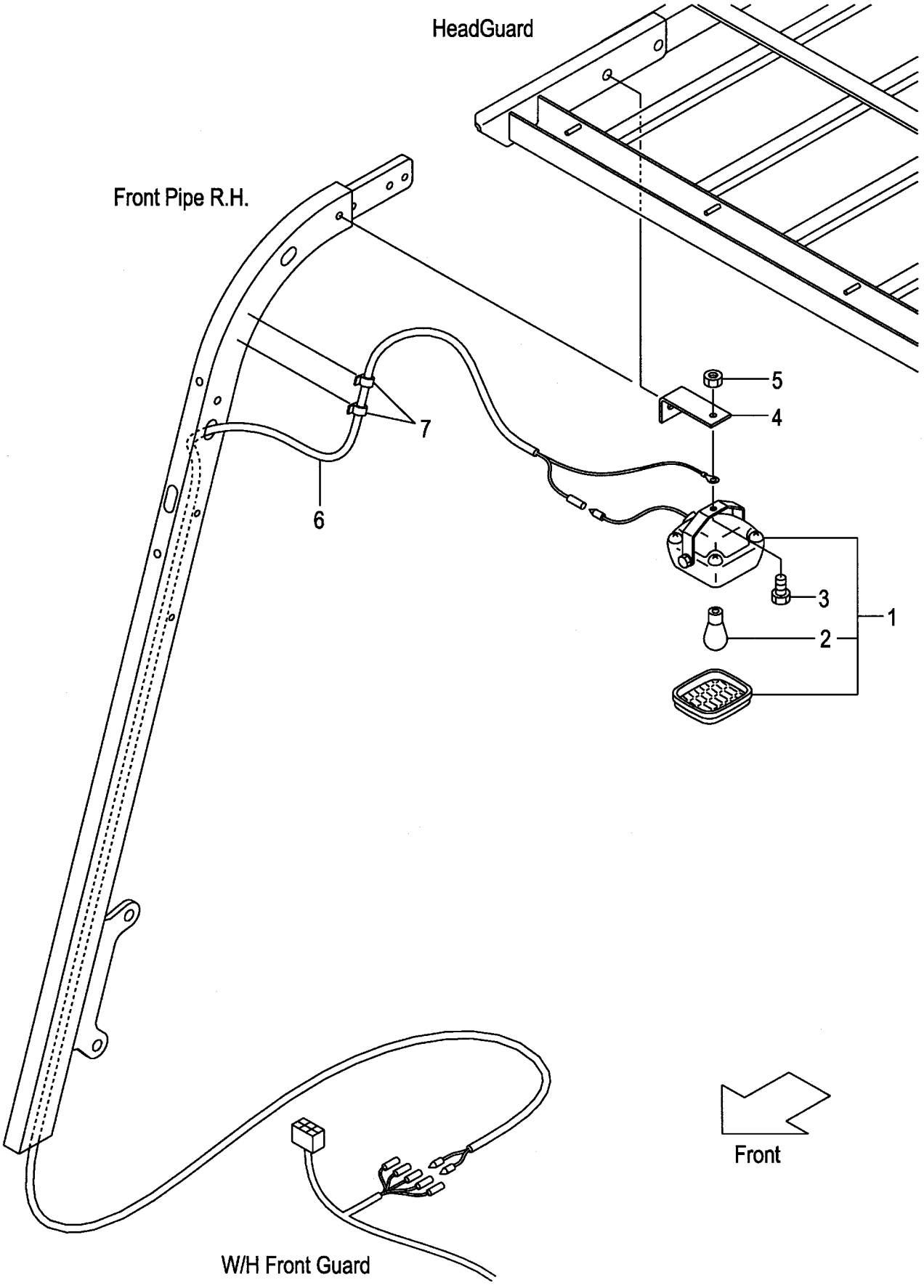

FIG.59
(F5022610)

A:FG20C17 FG20T17 FG25C17 FG25T17 C:FD20C17 FD20T17 FD25C17 FD25T17
B:FG20C6 FG20T6 FG25C6 FG25T6 FG20W6 FG25W6 D:FD20C6 FD20T6 FD25C6 FD25T6 FD20W6 FD25W6

Item No	Part No.	Mark	Description		Req'd	Remarks : Serial No.
1	516G9-10101		LAMP	ﾗﾝﾌﾟ	1	[SPL] INC.2
2	516G9-12011		BULB,12V/18.2W	ﾊﾞﾙﾌﾞ	1	[SPL]
3	01185-08016		BOLT	ﾎﾞﾙﾄ	1	[SPL]
4	539A9-02001		BRACKET,SPOT-LAMP	ﾌﾞﾗｹｯﾄ	1	[SPL]
5	01400-00008		NUT	ﾅｯﾄ	1	[SPL]
6	539A9-02011		WIRE-HARNESS,SPOT-L.	ﾜｲﾔﾊｰﾈｽ	1	[SPL]
7	27732-42311		CLAMP,HARNESS	ｸﾗﾝﾌﾟ	2	[SPL]

FIG.60 HEATER UNIT [HR]

(F50224U0) ヒータユニット

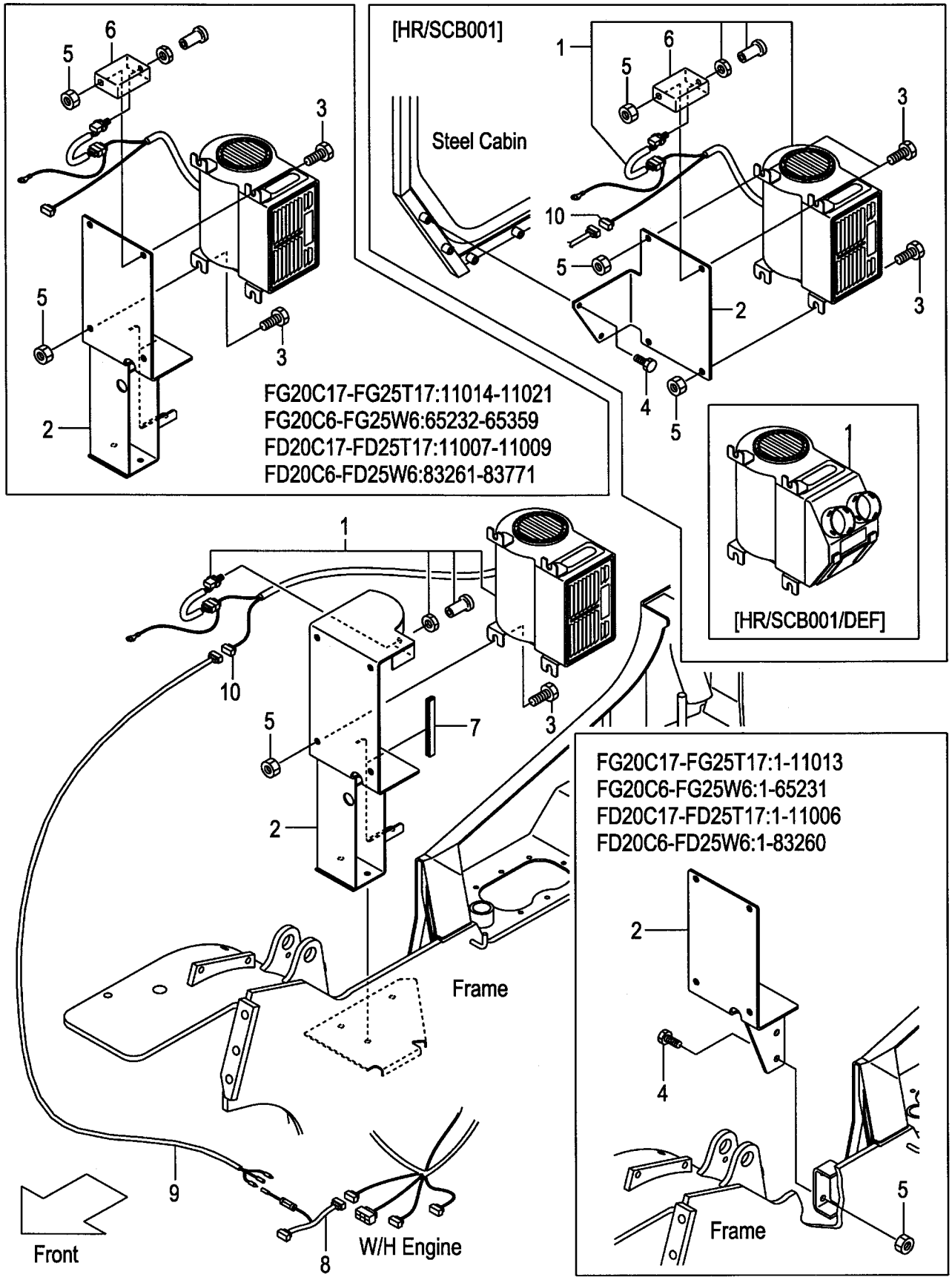

A:FG20C17 FG20T17 FG25C17 FG25T17:1-11043 C:FD20C17 FD20T17 FD25C17 FD25T17:1-11014
B:FG20C6 FG20T6 FG25C6 FG25T6 FG20W6 FG25W6:1-65760 D:FD20C6 FD20T6 FD25C6 FD25T6 FD20W6 FD25W6:1-84972

Item No	Part No.	Mark	Description		Req'd	Remarks : Serial No.
1	514T7-20201		HEATER,CAR	ﾋｰﾀ	1	C,A,B,D [HR]
-	556C7-22001		HEATER,CAR	ﾋｰﾀ	1	B,D [HR/SCB001/DEF]
2	539A7-22011		BRACKET,HEATER	ﾌﾞﾗｹｯﾄ	1	A:1-11013 B:1-65231 C:1-11006 D:1-83260 [HR]
-	539A7-22511		BRACKET,HEATER	ﾌﾞﾗｹｯﾄ	1	A:11014-11021 B:65232-65359 C:11007-11009 D:83261-83771 [HR]
-	539A7-22512		BRACKET,HEATER	ﾌﾞﾗｹｯﾄ	1	A:11022- B:65360- C:11010- D:83772- [HR]
-	539A7-22211		BRACKET,HEATER	ﾌﾞﾗｹｯﾄ	1	B,D [HR/SCB001]
3	01186-10020		BOLT	ﾎﾞﾙﾄ	4	C,A,B,D [HR]
4	01183-10025		BOLT	ﾎﾞﾙﾄ	2	A:1-11013 B:1-65231 C:1-11006 D:1-83260 [HR]
-	01186-08020		BOLT	ﾎﾞﾙﾄ	2	B,D [HR/SCB001]
5	01400-00010		NUT	ﾅｯﾄ	6	A:1-11013 B:1-65231 C:1-11006 D:1-83260 [HR]
-	01400-00010		NUT	ﾅｯﾄ	4	A:11014- B:65232- C:11007- D:83261- [HR]
-	01400-00010		NUT	ﾅｯﾄ	4	B,D [HR/SCB001]
6	539A7-22061		BRACKET,HEATER-SW.	ﾌﾞﾗｹｯﾄ	1	A:1-11021 B:1-65359 C:1-11009 D:1-83771 [HR]
-	539A7-22061		BRACKET,HEATER-SW.	ﾌﾞﾗｹｯﾄ	1	B,D [HR/SCB001]

FIG.60 HEATER UNIT [HR]

(F50224U0) ヒータユニット

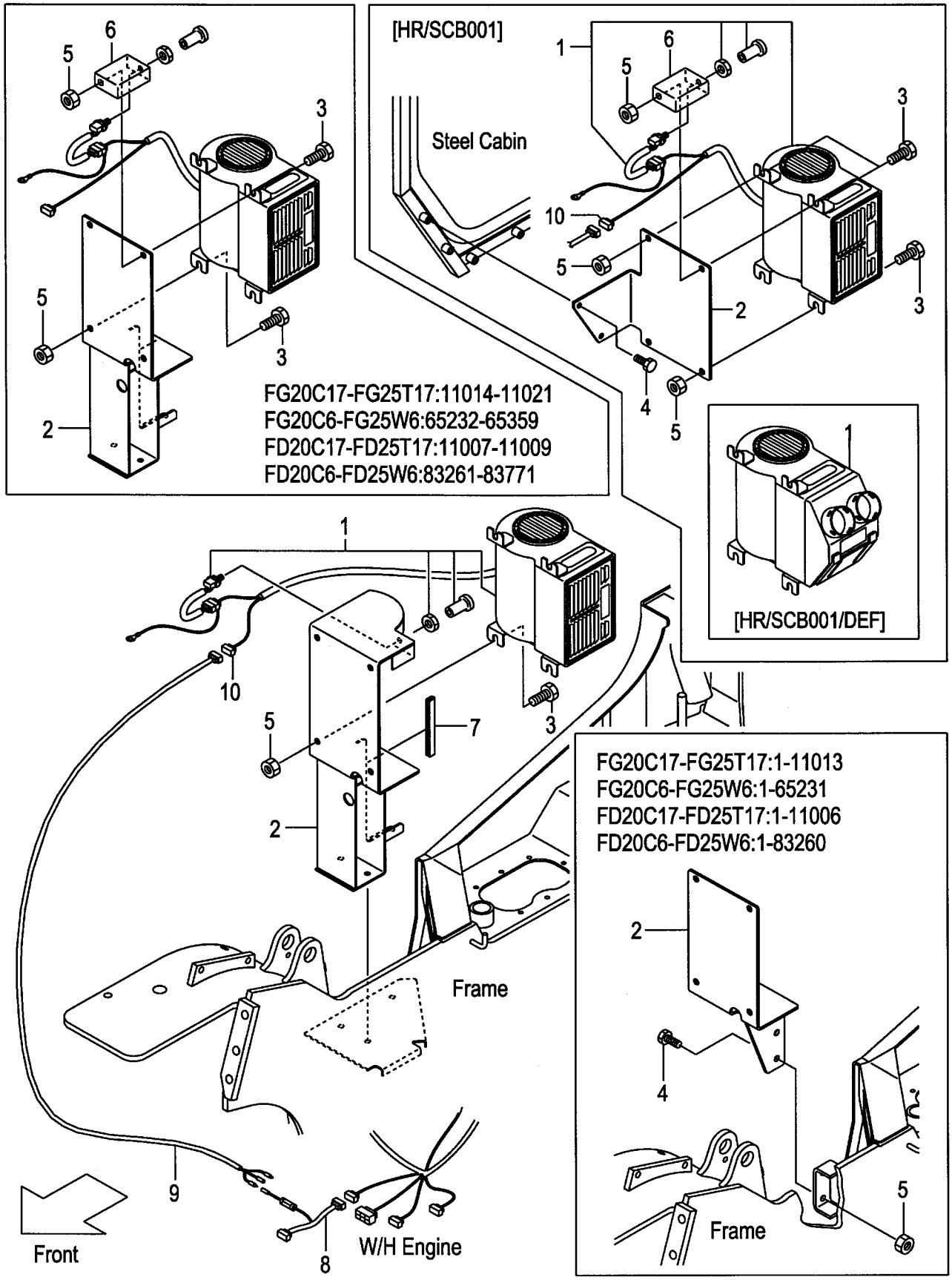

A:FG20C17 FG20T17 FG25C17 FG25T17:1-11043 C:FD20C17 FD20T17 FD25C17 FD25T17:1-11014
B:FG20C6 FG20T6 FG25C6 FG25T6 FG20W6 FG25W6:1-65760 D:FD20C6 FD20T6 FD25C6 FD25T6 FD20W6 FD25W6:1-84972

Item No	Part No.	Mark	Description		Req'd	Remarks : Serial No.
7	256J6-42291		RUBBER,SEAL	ﾗﾊﾞｰ	1	A:11014- B:65232- C:11007- D:83261- [HR](WITHOUT HR/SCB001)
8	514T7-22061		WIRE,LEAD	ﾜｲﾔ	1	C,A,B,D [HR]
9	514A1-42041		WIRE,LEAD	ﾜｲﾔ	1	C,A,B,D [HR]
10	534A7-22101		CONNECTOR,MALE	ｺﾈｸﾀ	1	C,A,B,D [HR]
11	27042-43501	+	TERMINAL	ﾀｰﾐﾅﾙ	2	C,A,B,D [HR]

FIG.60A HEATER UNIT [HR]

(F50224U1) ヒータユニット

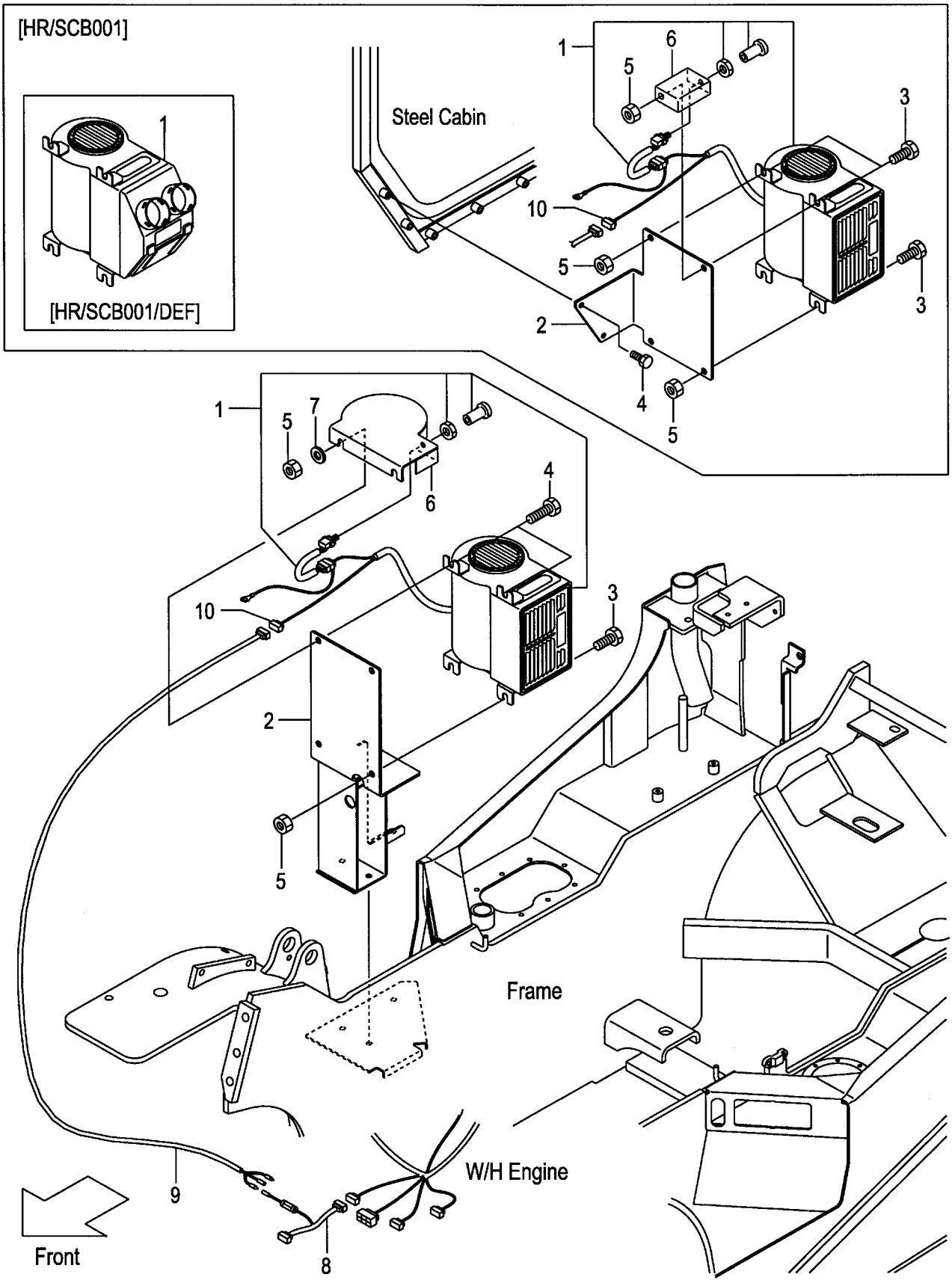

A:FG20C17 FG20T17 FG25C17 FG25T17:11044- C:FD20C17 FD20T17 FD25C17 FD25T17:11015-
B:FG20C6 FG20T6 FG25C6 FG25T6 FG20W6 FG25W6:65761- D:FD20C6 FD20T6 FD25C6 FD25T6 FD20W6 FD25W6:84973-

(F50224U1)

Item No	Part No.	Mark	Description		Req'd	Remarks : Serial No.
1	514T7-20201		HEATER,CAR	ﾋｰﾀ	1	C,A,B,D [HR]
-	556C7-22001		HEATER,CAR	ﾋｰﾀ	1	B,D [HR/SCB001/DEF]
2	539A7-22513		BRACKET,HEATER	ﾌﾞﾗｹｯﾄ	1	C,A,B,D [HR]
-	539A7-22211		BRACKET,HEATER	ﾌﾞﾗｹｯﾄ	1	B,D [HR/SCB001]
3	01186-10020		BOLT	ﾎﾞﾙﾄ	2	C,A,B,D [HR]
-	01186-10020		BOLT	ﾎﾞﾙﾄ	4	B,D [HR/SCB001]
4	01186-10025		BOLT	ﾎﾞﾙﾄ	2	C,A,B,D [HR]
-	01186-08020		BOLT	ﾎﾞﾙﾄ	2	B,D [HR/SCB001]
5	01400-00010		NUT	ﾅｯﾄ	4	C,A,B,D [HR]
6	539A7-22611		PLATE,TOP,HR	ﾌﾟﾚｰﾄ	1	C,A,B,D [HR]
-	539A7-22061		BRACKET,HEATER-SW.	ﾌﾞﾗｹｯﾄ	1	B,D [HR/SCB001]
7	02000-00010		WASHER	ﾜｯｼｬ	2	C,A,B,D [HR](WITHOUT HR/SCB001)
8	514T7-22061		WIRE,LEAD	ﾜｲﾔ	1	C,A,B,D [HR]
9	514A1-42041		WIRE,LEAD	ﾜｲﾔ	1	C,A,B,D [HR]
10	534A7-22101		CONNECTOR,MALE	ｺﾈｸﾀ	1	C,A,B,D [HR]
11	27042-43501	+	TERMINAL	ﾀｰﾐﾅﾙ	2	C,A,B,D [HR]

FIG.61 HEATER VALVE & ELBOW (GASOLINE):[HR]

(F50224W0) ﾋｰﾀﾊﾞﾙﾌﾞ&ｴﾙﾎﾞ

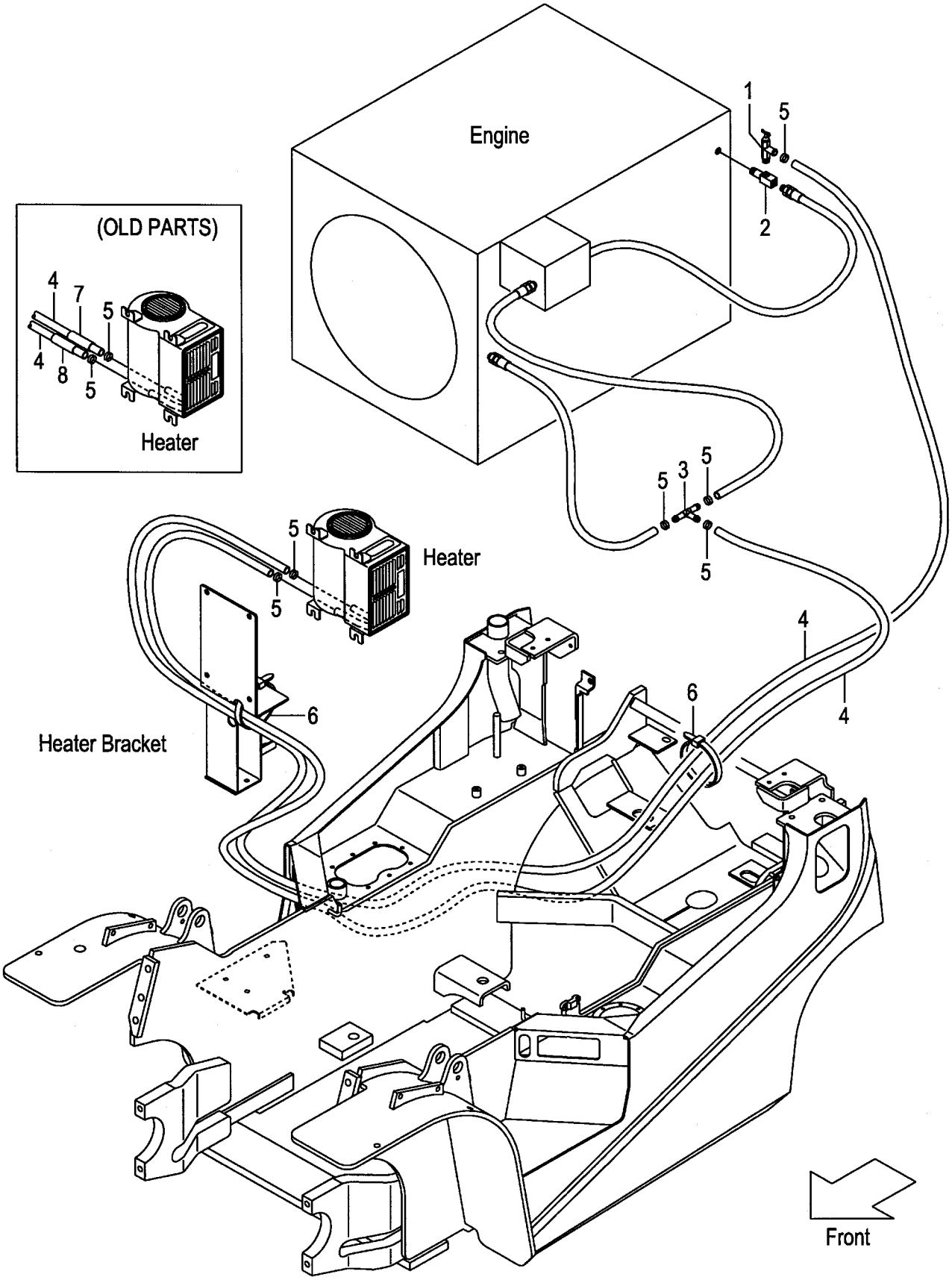

FIG.61
(F50224W0)

A:FG20C17 FG20T17 FG25C17 FG25T17
B:FG20C6 FG20T6 FG25C6 FG25T6 FG20W6 FG25W6

Item No	Part No.	Mark	Description		Req'd	Remarks : Serial No.
1	56110-63521		VALVE,WATER	ﾊﾞﾙﾌﾞ	1	[HR]
2	55597-22111		ELBOW	ｴﾙﾎﾞ	1	[HR]
3	23679-45051		THREE-WAY	ｽﾘｰｳｴｲ	1	[HR]
-	516G7-22001		THREE-WAY	ｽﾘｰｳｴｲ	1	[HR/LPO]
4	522A7-22011		HOSE,WATER	ﾎｰｽ	2	[HR]
5	04911-00022		CLIP	ｸﾘｯﾌﾟ	6	[HR]
6	04913-11200		BAND	ﾊﾞﾝﾄﾞ	10	[HR]
7	534A7-22201		PROTECTOR,TUBE	ﾌﾟﾛﾃｸﾀ	1	A:1-11013 B:1-65231 [HR]
8	534A7-22211		PROTECTOR,TUBE	ﾌﾟﾛﾃｸﾀ	1	A:1-11013 B:1-65231 [HR]

FIG.62 HEATER VALVE & ELBOW (DIESEL):[HR]

(F50224X0) ﾋｰﾀﾊﾞﾙﾌﾞ&ｴﾙﾎﾞ

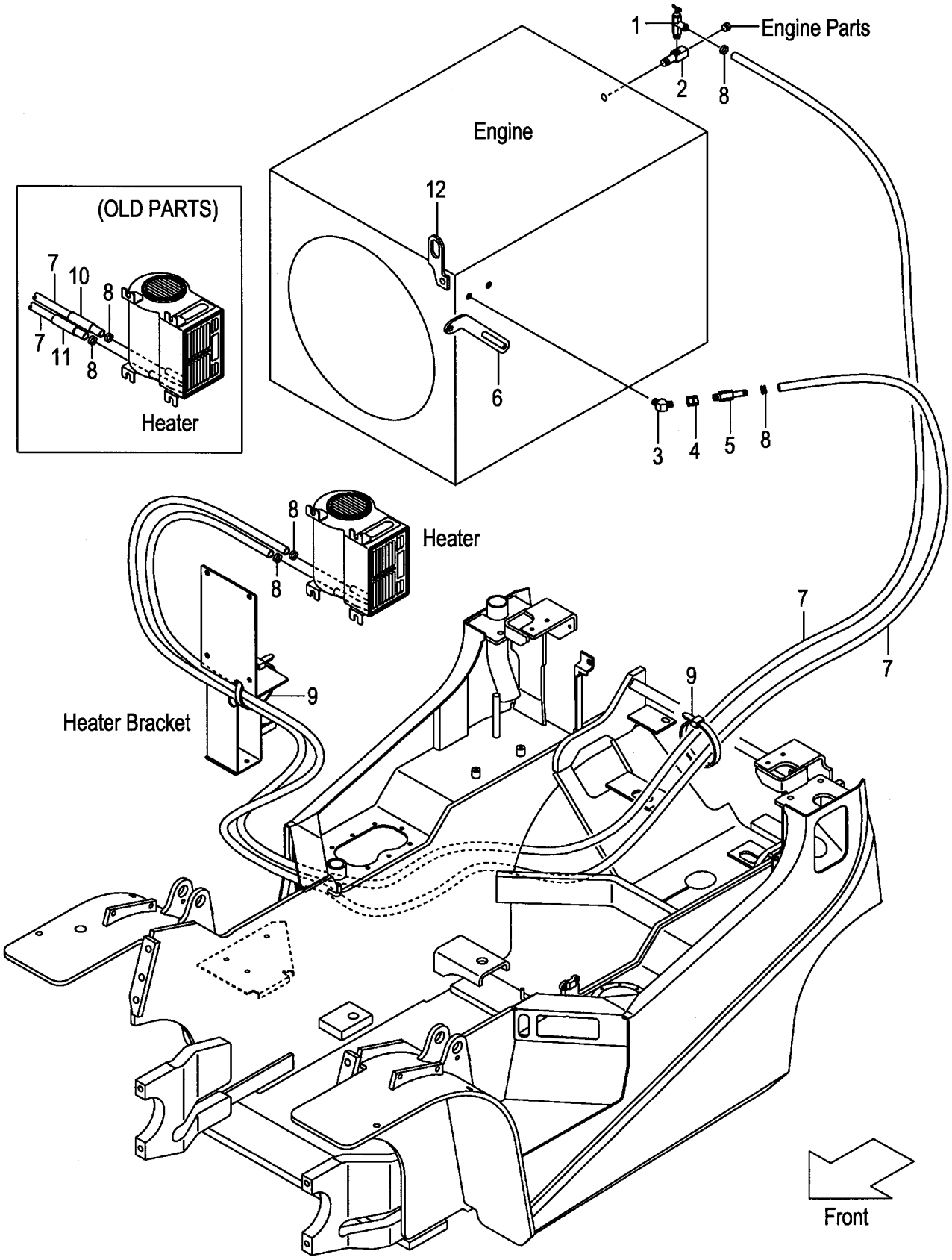

FIG.62
(F50224X0)

A:FD20C17 FD20T17 FD25C17 FD25T17

Item No	Part No.	Mark	Description		Req'd	Remarks : Serial No.
1	56110-63521		VALVE,WATER	ﾊﾞﾙﾌﾞ	1	[HR]
2	55597-22111		ELBOW	ｴﾙﾎﾞ	1	[HR]
3	53130-12091		ELBOW	ｴﾙﾎﾞ	1	[HR]
4	04138-00303		UNION	ﾕﾆｵﾝ	1	[HR]
5	529F7-22001		NIPPLE	ﾆｯﾌﾟﾙ	1	[HR]
6	520F7-22001		PLATE,ADJUST	ﾌﾟﾚｰﾄ	1	[HR]
7	522A7-22011		HOSE,WATER	ﾎｰｽ	2	[HR]
8	04911-00022		CLIP	ｸﾘｯﾌﾟ	4	[HR]
9	04913-11200		BAND	ﾊﾞﾝﾄﾞ	10	[HR]
10	534A7-22201		PROTECTOR,TUBE	ﾌﾟﾛﾃｸﾀ	1	1-11006 [HR]
11	534A7-22211		PROTECTOR,TUBE	ﾌﾟﾛﾃｸﾀ	1	1-11006 [HR]
12	539A7-22301		HANGER,E/G	ﾊﾝｶﾞ	1	[HR]

FIG.63 HEATER VALVE & ELBOW (DIESEL):[HR]

(F50224Y0) ﾋｰﾀﾊﾞﾙﾌﾞ&ｴﾙﾎﾞ

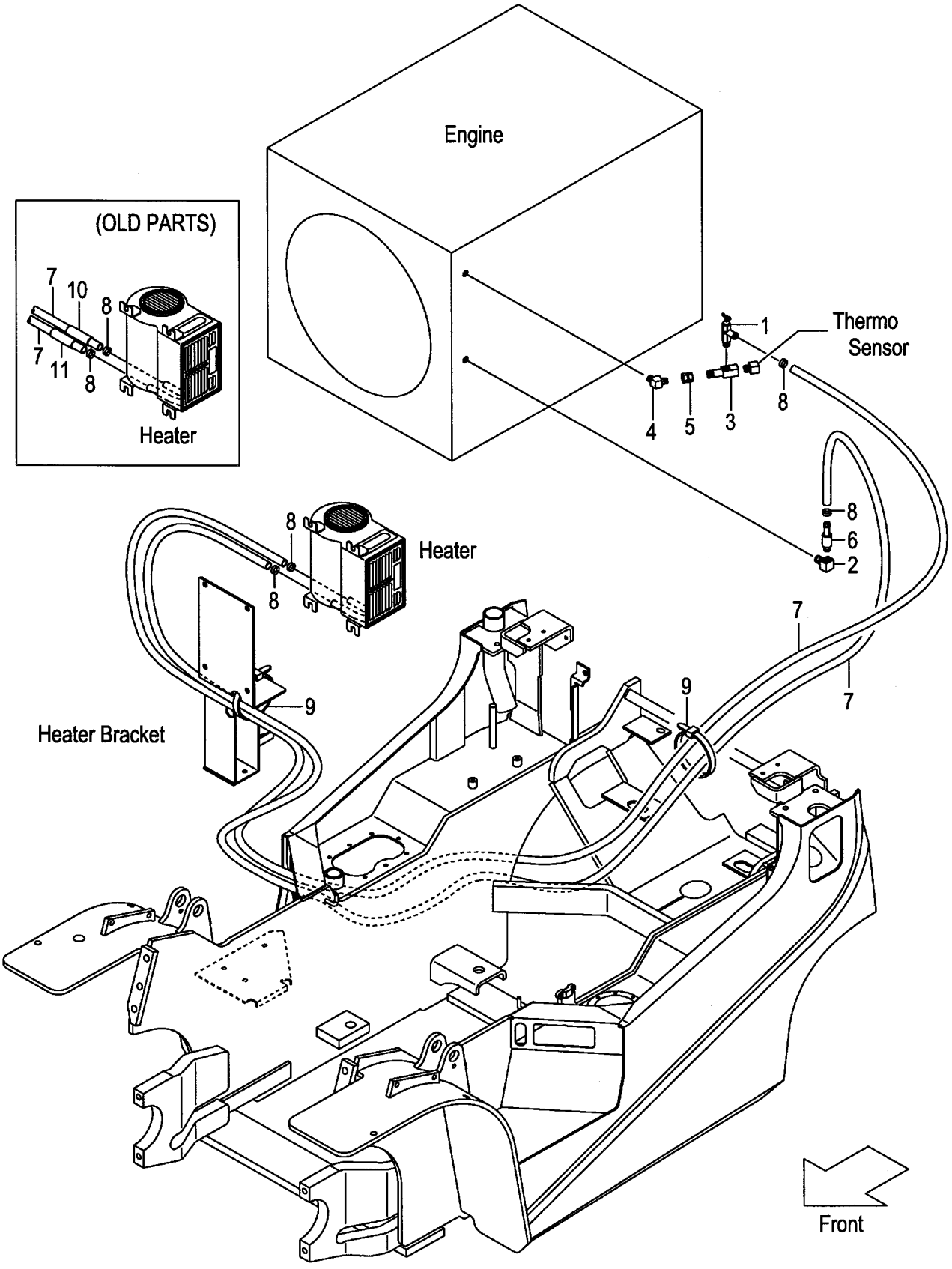

FIG.63
(F50224Y0)

A:FD20C6 FD20T6 FD25C6 FD25T6 FD20W6 FD25W6

Item No	Part No.	Mark	Description		Req'd	Remarks : Serial No.
1	56110-63521		VALVE,WATER	ﾊﾞﾙﾌﾞ	1	[HR]
2	53030-52471		ELBOW	ｴﾙﾎﾞ	1	[HR]
3	55597-22111		ELBOW	ｴﾙﾎﾞ	1	[HR]
4	53130-12091		ELBOW	ｴﾙﾎﾞ	1	[HR]
5	04138-00303		UNION	ﾕﾆｵﾝ	1	[HR]
6	529F7-22001		NIPPLE	ﾆｯﾌﾟﾙ	1	[HR]
7	522A7-22011		HOSE,WATER	ﾎｰｽ	2	[HR]
8	04911-00022		CLIP	ｸﾘｯﾌﾟ	4	[HR]
9	04913-11200		BAND	ﾊﾞﾝﾄﾞ	10	[HR]
10	534A7-22201		PROTECTOR,TUBE	ﾌﾟﾛﾃｸﾀ	1	1-83260 [HR]
11	534A7-22211		PROTECTOR,TUBE	ﾌﾟﾛﾃｸﾀ	1	1-83260 [HR]

FIG.64 FAN [FAN]

(F5022620) ファン

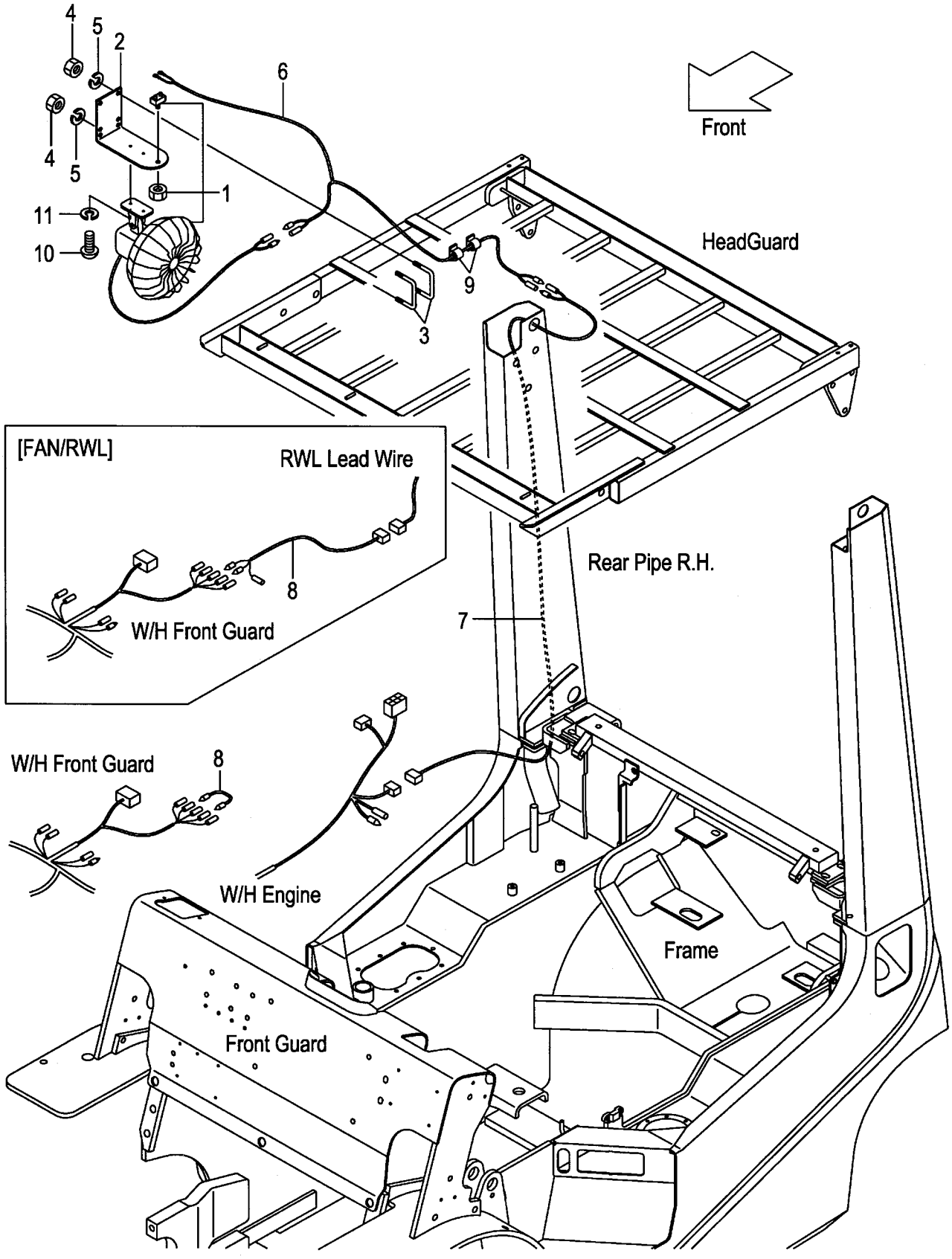

A:FG20C17 FG20T17 FG25C17 FG25T17 C:FD20C17 FD20T17 FD25C17 FD25T17
B:FG20C6 FG20T6 FG25C6 FG25T6 FG20W6 FG25W6 D:FD20C6 FD20T6 FD25C6 FD25T6 FD20W6 FD25W6

Item No	Part No.	Mark	Description		Req'd	Remarks : Serial No.
1	514A5-32341		FAN,CAR	ﾌｧﾝ	1	[FAN]
-	514A5-32341		FAN,CAR	ﾌｧﾝ	1	B,D [FAN/SCB001]
2	539A8-22101		BRACKET,FAN	ﾌﾞﾗｹｯﾄ	1	[FAN](WITHOUT FAN/SCB001)
3	55812-42011		U-BOLT	Uﾎﾞﾙﾄ	2	[FAN](WITHOUT FAN/SCB001)
4	01400-00008		NUT	ﾅｯﾄ	4	[FAN](WITHOUT FAN/SCB001)
5	02010-00008		WASHER	ﾜｯｼｬ	4	[FAN](WITHOUT FAN/SCB001)
6	539A8-22151		WIRE-HARNESS,FAN	ﾜｲﾔﾊｰﾈｽ	1	[FAN](WITHOUT FAN/SCB001)
7	516G1-42101		WIRE,LEAD	ﾜｲﾔ	1	[FAN](WITHOUT FAN/SCB001)
8	516G1-42211		WIRE,LEAD	ﾜｲﾔ	1	[FAN](WITHOUT FAN/SCB001)
-	514A1-42041		WIRE,LEAD	ﾜｲﾔ	1	[FAN/RWL]
9	27732-42311		CLAMP,HARNESS	ｸﾗﾝﾌﾟ	4	[FAN](WITHOUT FAN/SCB001)
10	01030-04014		SCREW	ｽｸﾘｭ	2	[FAN]
-	01044-04014		SCREW	ｽｸﾘｭ	2	B,D [FAN/SCB001]
11	02010-00004		WASHER	ﾜｯｼｬ	2	[FAN](WITHOUT FAN/SCB001)
12	229F6-42201	+	SEAL,PANEL-COVER,A	ｼｰﾙ	3	B,D [FAN/SCB001]
13	229F6-42211	+	SEAL,PANEL-COVER,B	ｼｰﾙ	2	B,D [FAN/SCB001]
14	534A5-33001	+	GROMMET	ｸﾞﾛﾒｯﾄ	2	B,D [FAN/SCB001]

FIG.65 AMMETER [AM]

(F5022630) アンメータ

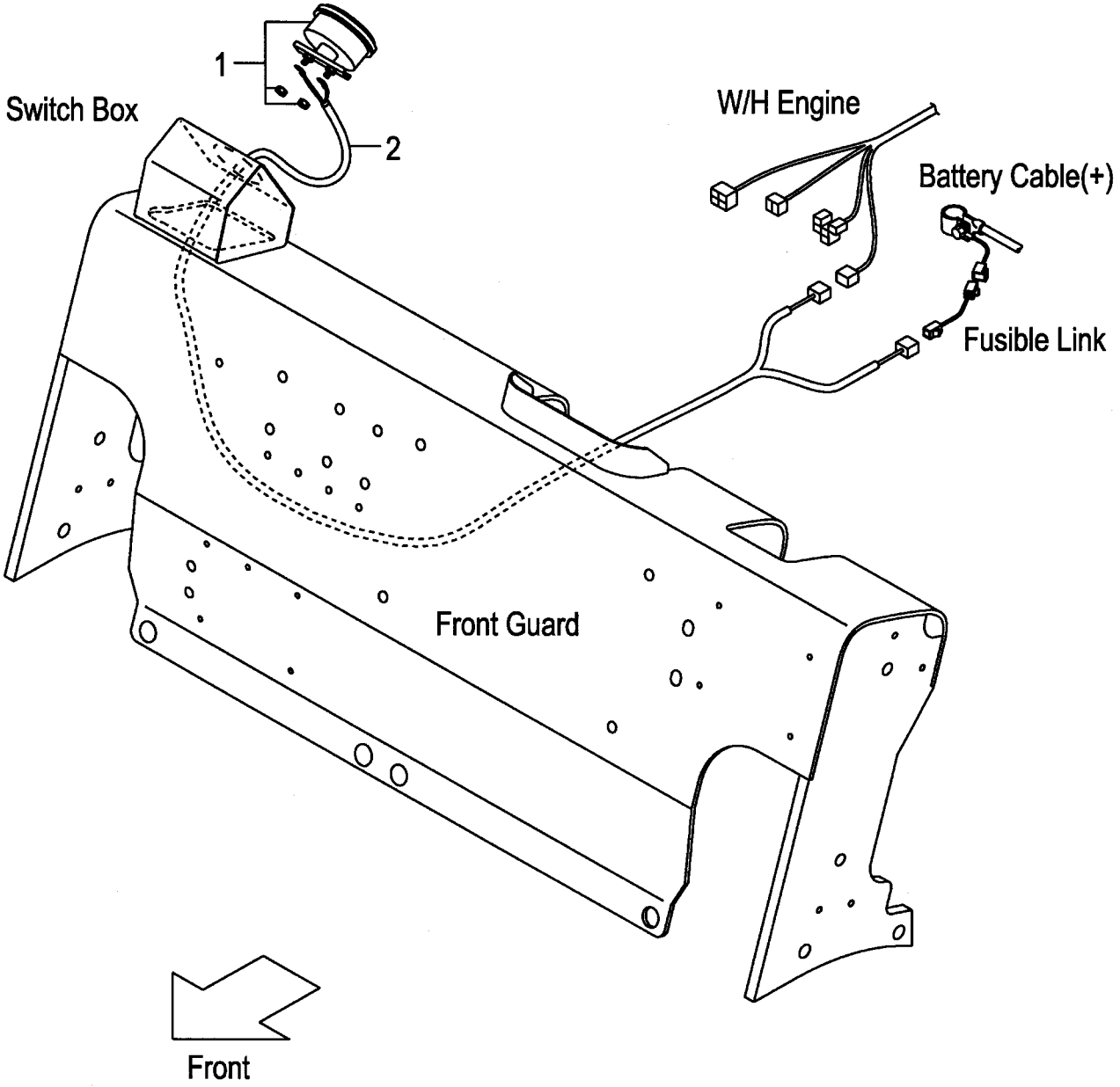

FIG.65

(F5022630)

A:FG20C17 FG20T17 FG25C17 FG25T17 C:FD20C17 FD20T17 FD25C17 FD25T17
B:FG20C6 FG20T6 FG25C6 FG25T6 FG20W6 FG25W6 D:FD20C6 FD20T6 FD25C6 FD25T6 FD20W6 FD25W6

Item No	Part No.	Mark	Description	Req'd	Remarks : Serial No.
1	3956323		AMMETER,50A アンメータ	1	[AM]
2	516G6-12051		WIRE,LEAD,AMMETER ワイヤ	1	[AM]

FIG.66 SPEED METER [SM]

(F5022640) ｽﾋﾟｰﾄﾞﾒｰﾀ

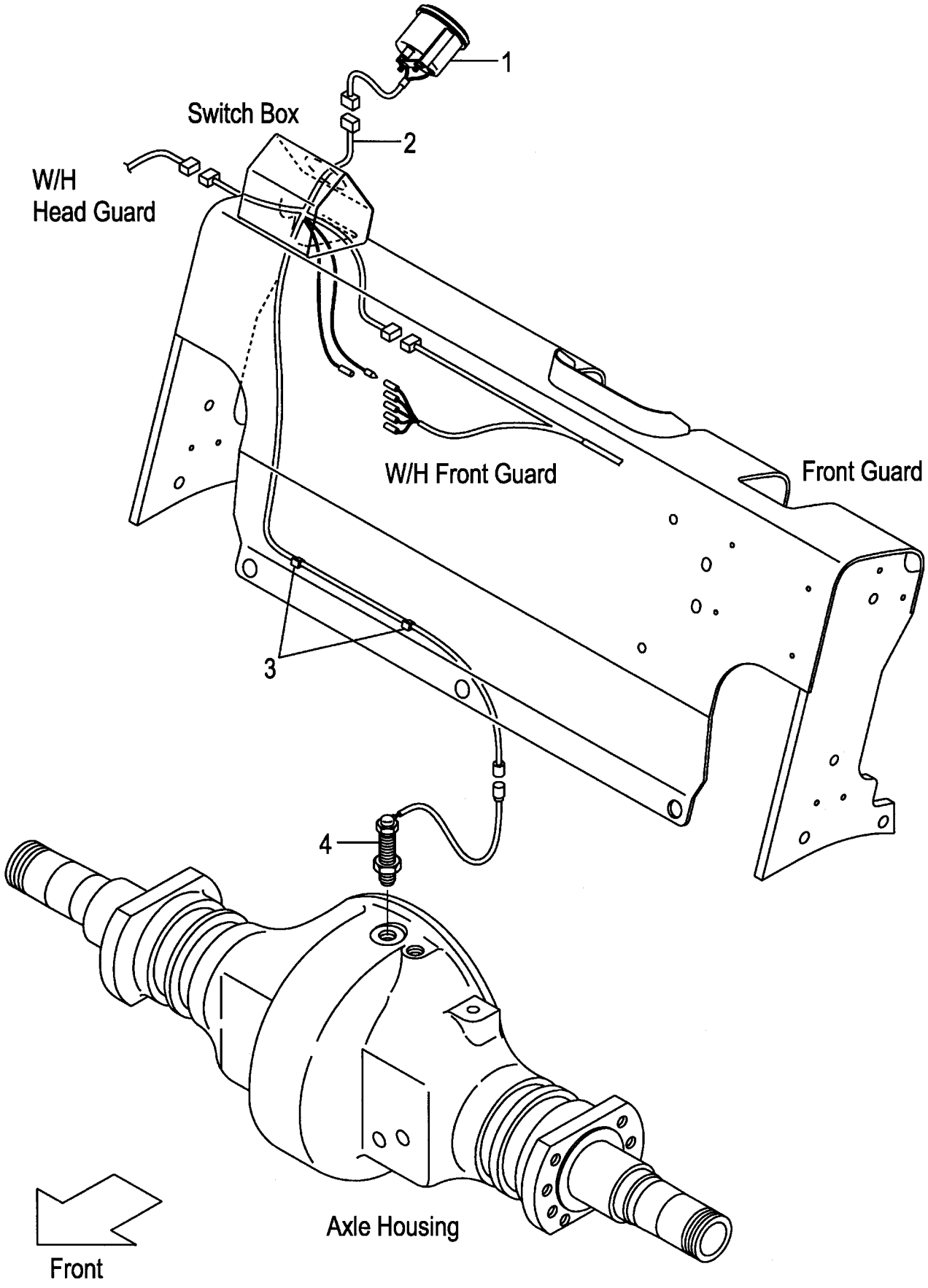

FIG.66

(F5022640)

A:FG20C17 FG20T17 FG25C17 FG25T17 C:FD20C17 FD20T17 FD25C17 FD25T17
B:FG20C6 FG20T6 FG25C6 FG25T6 FG20W6 FG25W6 D:FD20C6 FD20T6 FD25C6 FD25T6 FD20W6 FD25W6

Item No	Part No.	Mark	Description		Req'd	Remarks : Serial No.
1	534A7-50101		METER,SPEED	ﾒｰﾀ	1	[SM]
2	516G7-50301		WIRE-HARNESS,SM	ﾜｲﾔﾊｰﾈｽ	1	[SM]
3	27732-42311		CLAMP,HARNESS	ｸﾗﾝﾌﾟ	2	[SM]
4	16402-54331		SENSOR	ｾﾝｻ	1	[SM]

FIG.67 TORQUE CONVERTER THERMOMETER [TTM]

(F5022650) トルクコンバータサーモメータ

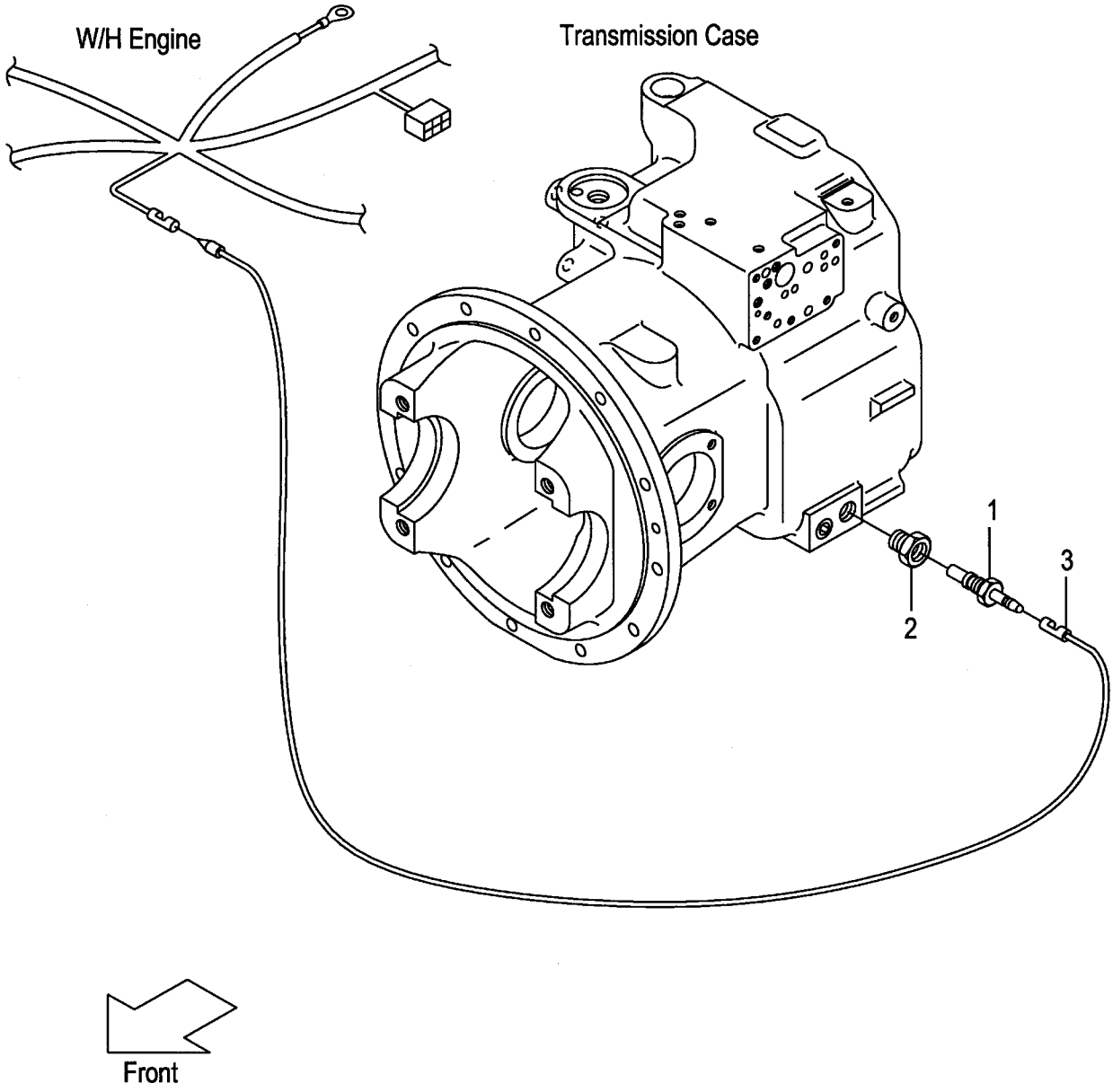

FIG.67
(F5022650)

A:FG20T17 FG25T17 C:FD20T17 FD25T17
B:FG20T6 FG25T6 D:FD20T6 FD25T6

Item No	Part No.	Mark	Description	Req'd	Remarks : Serial No.
1	23652-44001		UNIT,SENDING ﾕﾆｯﾄ	1	[TTM]
2	521A2-42061		ADAPTER,THERMO-SW. ｱﾀﾞﾌﾟﾀ	1	[TTM]
3	214A2-42371		WIRE,LEAD ﾜｲﾔ	1	[TTM]

FIG.68 TORQUE CONVERTER PRESSURE METER [TPM]

(F5022660) トルクコンバータプレッシャメータ

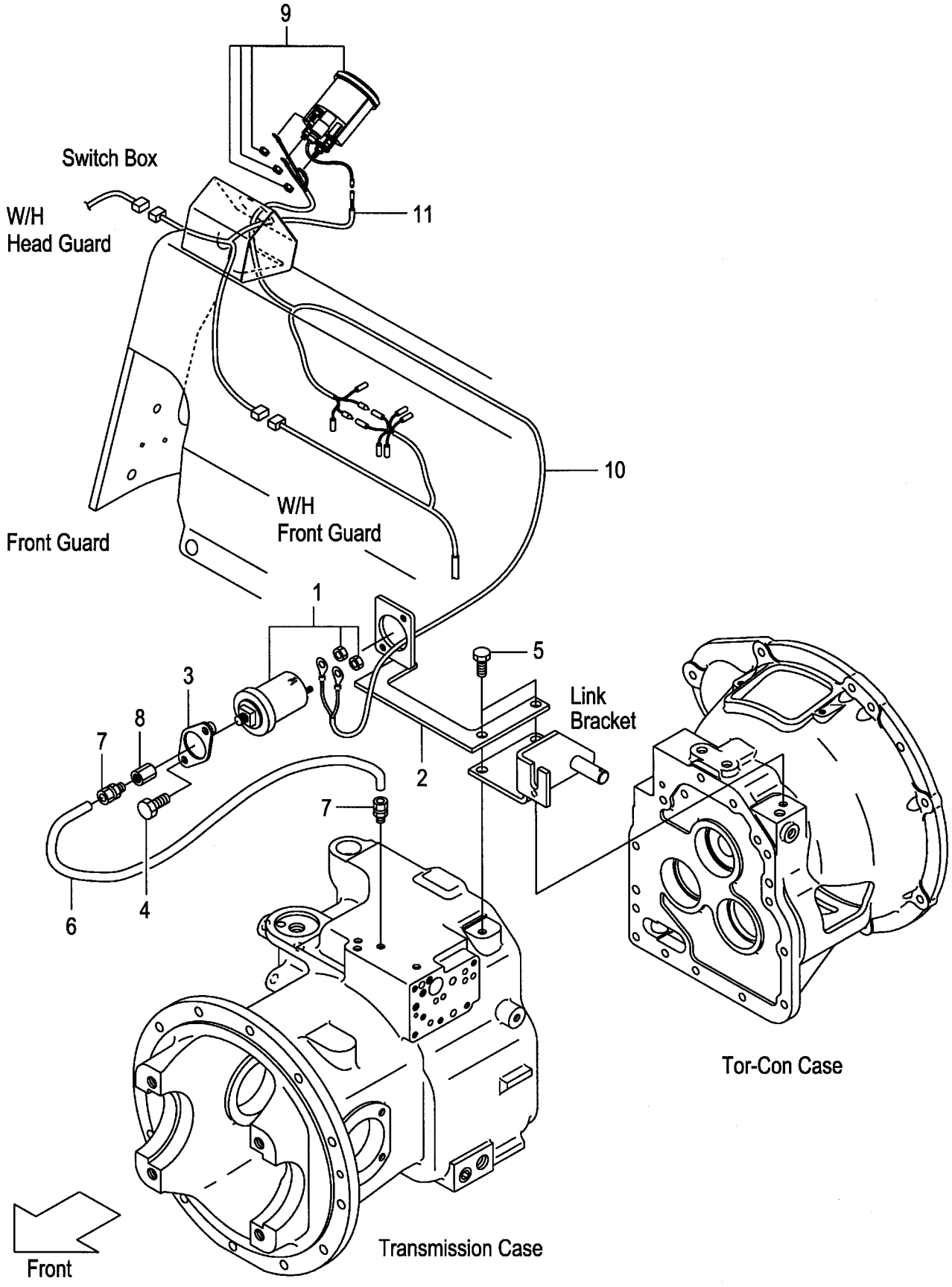

FIG.68
(F5022660)

A:FG20T17 FG25T17 C:FD20T17 FD25T17
B:FG20T6 FG25T6 D:FD20T6 FD25T6

Item No	Part No.	Mark	Description		Req'd	Remarks : Serial No.
1	516G6-92001		SENSOR,PRESS.GAUGE	ｾﾝｻ	1	[TPM]
2	539B6-92111		BRACKET,SENSOR	ﾌﾞﾗｹｯﾄ	1	[TPM]
3	516G6-92151		COVER,SENSOR	ｶﾊﾞｰ	1	[TPM]
4	01186-08025		BOLT	ﾎﾞﾙﾄ	2	[TPM]
5	01184-10025		BOLT	ﾎﾞﾙﾄ	2	[TPM]
6	539B6-92211		PIPE,CAPPER	ﾊﾟｲﾌﾟ	1	[TPM]
7	516G6-92011		JOINT	ｼﾞｮｲﾝﾄ	2	[TPM]
8	516G6-92031		ADAPTER	ｱﾀﾞﾌﾟﾀ	1	[TPM]
9	516G6-92022		GAUGE,PRESSURE	ｹﾞｰｼﾞ	1	[TPM]
10	516G6-92201		WIRE-HARNESS,TPM	ﾜｲﾔﾊｰﾈｽ	1	[TPM]
11	516G6-92211		WIRE-HARNESS,TPM	ﾜｲﾔﾊｰﾈｽ	1	[TPM]

FIG.69 SPEED DETECTOR UNIT [SAS]

(F5022670) ｽﾋﾟｰﾄﾞﾃﾞｨﾃｸﾀﾕﾆｯﾄ

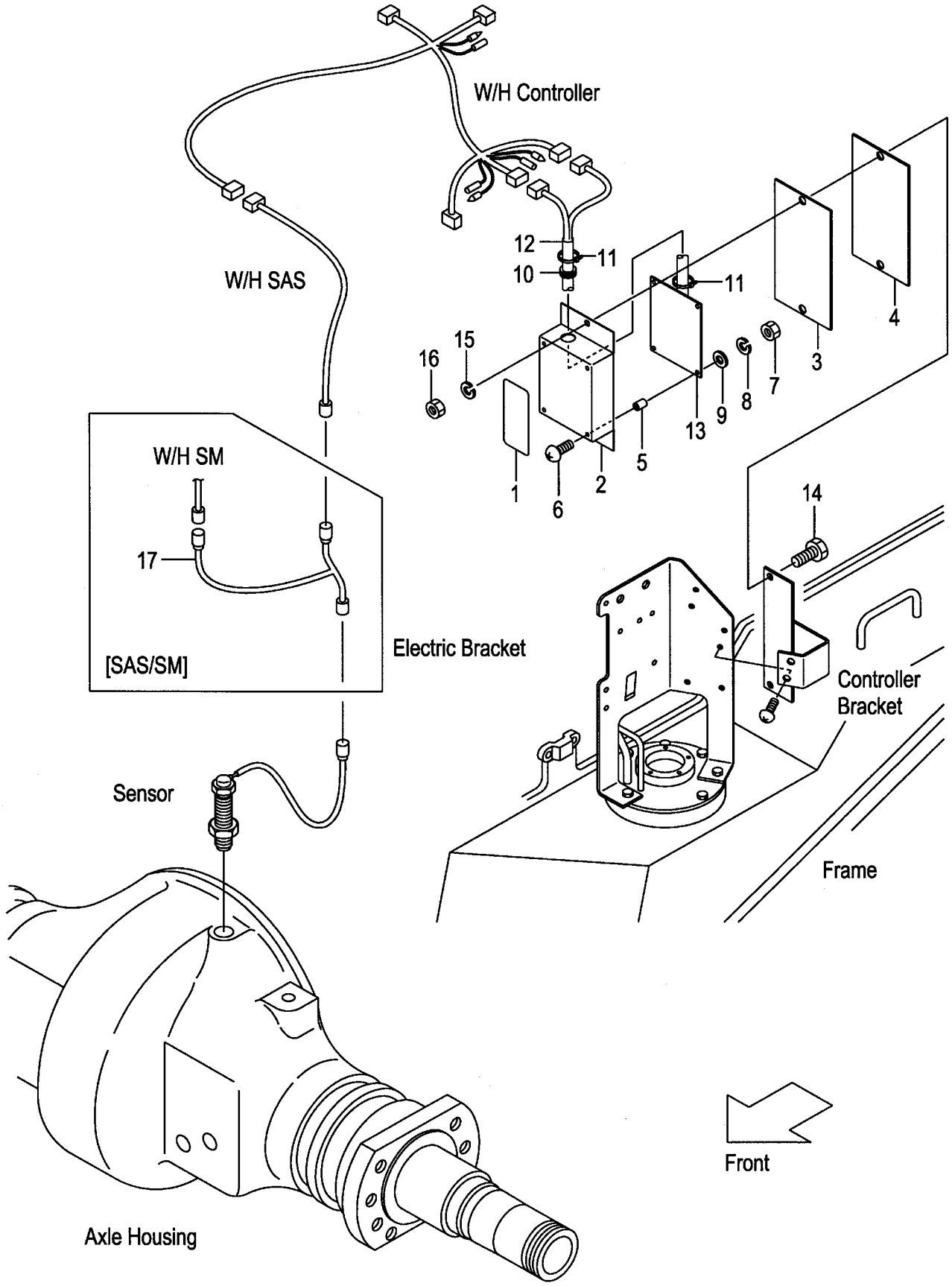

A:FG20C17 FG20T17 FG25C17 FG25T17 C:FD20C17 FD20T17 FD25C17 FD25T17
B:FG20C6 FG20T6 FG25C6 FG25T6 FG20W6 FG25W6 D:FD20C6 FD20T6 FD25C6 FD25T6 FD20W6 FD25W6

Item No	Part No.	Mark	Description		Req'd	Remarks : Serial No.
A1	534A7-50301		UNIT-ASSY,SPEED-DETECTOR	ユニットアッセン	1	[SASB05][SASR05][SASC05] INC.1-16
-	534A7-50401		UNIT-ASSY,SPEED-DETECTOR	ユニットアッセン	1	[SASB10][SASR10][SASC10] INC.1-16
-	534A7-50501		UNIT-ASSY,SPEED-DETECTOR	ユニットアッセン	1	[SASB15][SASR15][SASC15] INC.1-16
1	539A7-52311		PLATE,NAME	プレート	1	[SASB05][SASR05][SASC05]
-	539A7-52411		PLATE,NAME	プレート	1	[SASB10][SASR10][SASC10]
-	539A7-52511		PLATE,NAME	プレート	1	[SASB15][SASR15][SASC15]
2	55792-52601		CASE	ケース	1	[SASB05&10&15][SASR05&10&15] [SASC05&10&15]
3	55792-52611		SEAT,SPONG	シート	1	[SASB05&10&15][SASR05&10&15] [SASC05&10&15]
4	55792-52621		PLATE	プレート	1	[SASB05&10&15][SASR05&10&15] [SASC05&10&15]
5	27042-64311		SPACER	スペーサ	4	[SASB05&10&15][SASR05&10&15] [SASC05&10&15]
6	01030-04020		SCREW	スクリュ	4	[SASB05&10&15][SASR05&10&15] [SASC05&10&15]
7	01400-00004		NUT	ナット	4	[SASB05&10&15][SASR05&10&15] [SASC05&10&15]
8	02010-00004		WASHER	ワッシャ	4	[SASB05&10&15][SASR05&10&15] [SASC05&10&15]
9	02000-00004		WASHER	ワッシャ	4	[SASB05&10&15][SASR05&10&15] [SASC05&10&15]
10	205A2-63311		GROMMET	グロメット	1	[SASB05&10&15][SASR05&10&15] [SASC05&10&15]
11	04913-10200		BAND	バンド	2	[SASB05&10&15][SASR05&10&15] [SASC05&10&15]
12	55792-52641		WIRE-HARNESS,ATC	ワイヤハーネス	1	[SASB05&10&15][SASR05&10&15] [SASC05&10&15]
13	534A7-52301		BOARD,PRINTED	ボード	1	[SASB05][SASR05][SASC05]
-	534A7-52401		BOARD,PRINTED	ボード	1	[SASB10][SASR10][SASC10]
-	534A7-52501		BOARD,PRINTED	ボード	1	[SASB15][SASR15][SASC15]
14	01100-06020		BOLT	ボルト	2	[SASB05&10&15][SASR05&10&15] [SASC05&10&15]
15	02010-00006		WASHER	ワッシャ	2	[SASB05&10&15][SASR05&10&15] [SASC05&10&15]
16	01400-00006		NUT	ナット	2	[SASB05&10&15][SASR05&10&15] [SASC05&10&15]
17	539A7-52041		WIRE-HARNESS,SAS/SM	ワイヤハーネス	1	[SAS/SM]

FIG.70 SPEED ALARM SYSTEM [SASB]

(F5022680) スピードアラームシステム

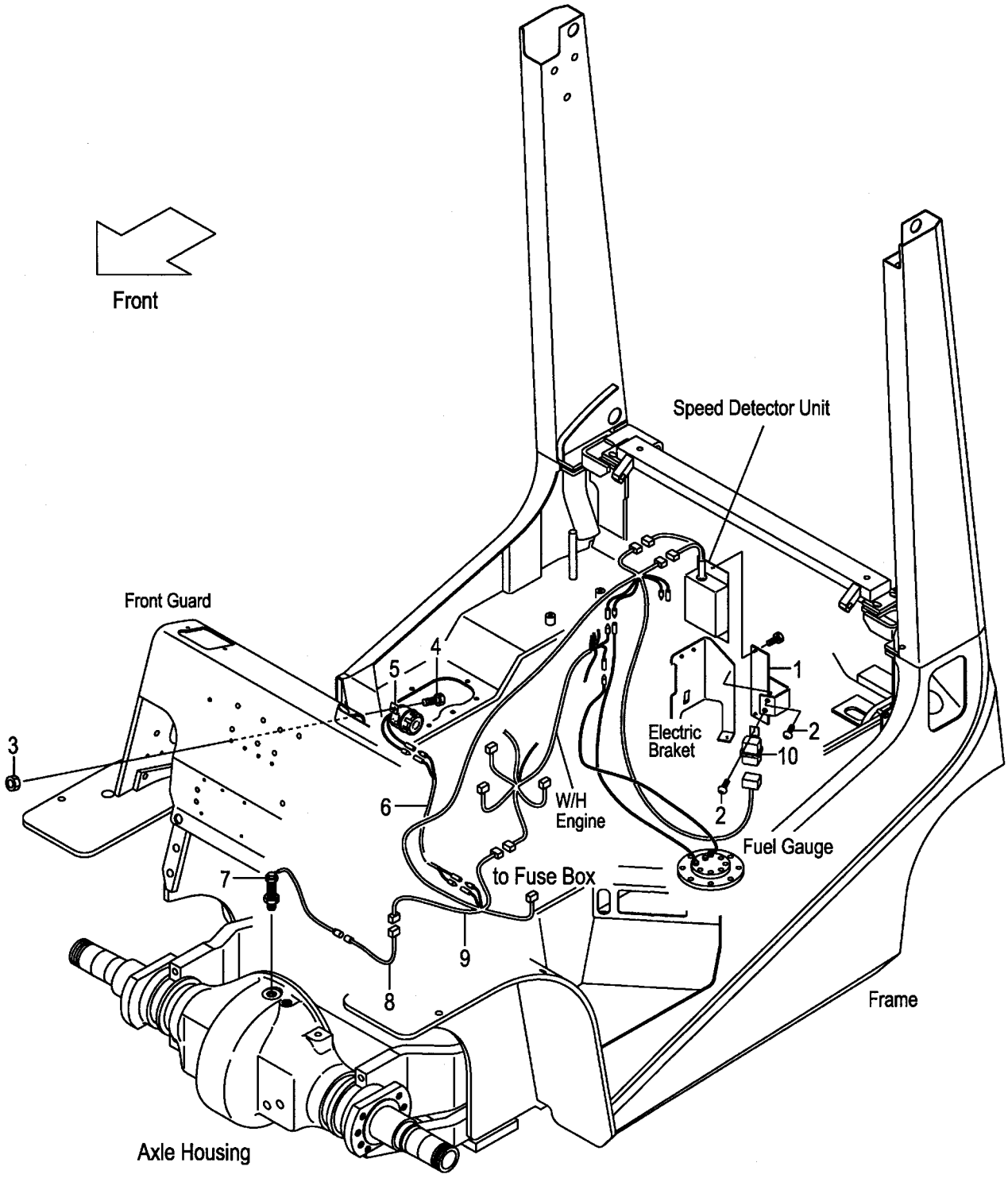

A:FG20C17 FG20T17 FG25C17 FG25T17 C:FD20C17 FD20T17 FD25C17 FD25T17
B:FG20C6 FG20T6 FG25C6 FG25T6 FG20W6 FG25W6 D:FD20C6 FD20T6 FD25C6 FD25T6 FD20W6 FD25W6

Item No	Part No.	Mark	Description		Req'd	Remarks : Serial No.
1	539A7-52001		BRACKET,CONTROLLER	ﾌﾞﾗｹｯﾄ	1	[SASB05][SASB10][SASB15]
2	214A2-42611		SCREW	ｽｸﾘｭ	2	[SASB05][SASB10][SASB15]
3	01400-00006		NUT	ﾅｯﾄ	1	[SASB05][SASB10][SASB15]
4	239A5-42381		BOLT	ﾎﾞﾙﾄ	1	[SASB05][SASB10][SASB15]
5	529F7-52241		ALARM,BUZZER	ｱﾗｰﾑ	1	[SASB05][SASB10][SASB15]
6	558A9-92001		WIRE-HARNESS,LICENCE	ﾜｲﾔﾊｰﾈｽ	1	[SASB05][SASB10][SASB15]
7	16402-54331		SENSOR	ｾﾝｻ	1	[SASB05][SASB10][SASB15]
8	534A7-50601		WIRE-HARNESS,SAS	ﾜｲﾔﾊｰﾈｽ	1	[SASB05][SASB10][SASB15]
9	539B7-52031		WIRE-HARNESS,CONTROL	ﾜｲﾔﾊｰﾈｽ	1	[SASB05][SASB10][SASB15]
10	26062-42881		RELAY,12V	ﾘﾚｰ	1	[SASB05][SASB10][SASB15]

FIG.71 SPEED ALARM SYSTEM [SASR]

(F5022690) スピードアラームシステム

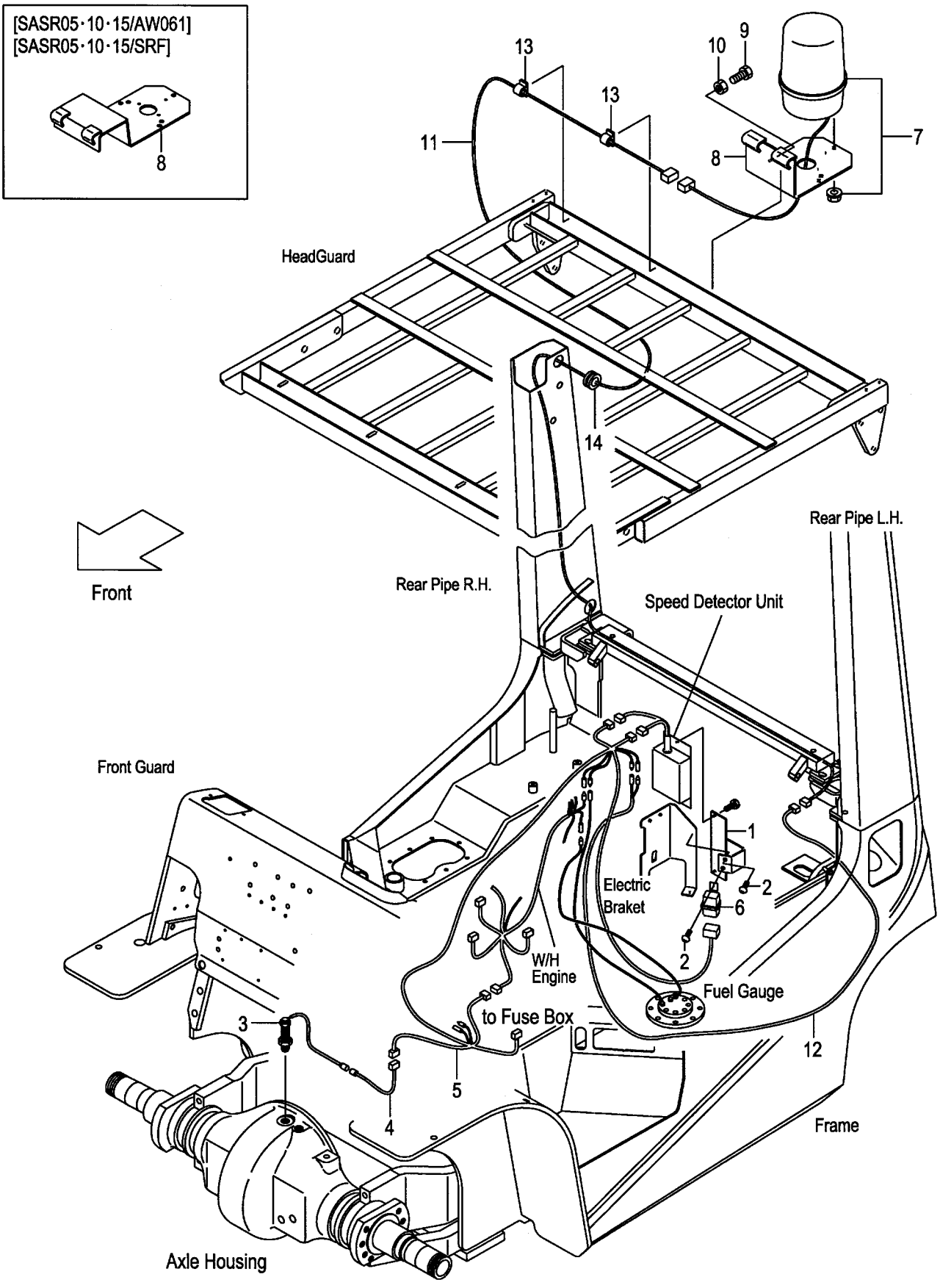

A:FG20C17 FG20T17 FG25C17 FG25T17 C:FD20C17 FD20T17 FD25C17 FD25T17
B:FG20C6 FG20T6 FG25C6 FG25T6 FG20W6 FG25W6 D:FD20C6 FD20T6 FD25C6 FD25T6 FD20W6 FD25W6

Item No	Part No.	Mark	Description		Req'd	Remarks : Serial No.
1	539A7-52001		BRACKET,CONTROLLER	ﾌﾞﾗｹｯﾄ	1	[SASR05][SASR10][SASR15]
2	214A2-42611		SCREW	ｽｸﾘｭ	2	[SASR05][SASR10][SASR15]
3	16402-54331		SENSOR	ｾﾝｻ	1	[SASR05][SASR10][SASR15]
4	534A7-50601		WIRE-HARNESS,SAS	ﾜｲﾔﾊｰﾈｽ	1	[SASR05][SASR10][SASR15]
5	539B7-52031		WIRE-HARNESS,CONTROL	ﾜｲﾔﾊｰﾈｽ	1	[SASR05][SASR10][SASR15]
6	26062-42881		RELAY,12V	ﾘﾚｰ	1	[SASR05][SASR10][SASR15]
7	514A1-41001		LIGHT,REVOLVING	ﾗｲﾄ	1	[SASR05][SASR10][SASR15]
8	529F1-42251		BRACKET,REVOLVING	ﾌﾞﾗｹｯﾄ	1	[SASR05][SASR10][SASR15]
-	539A8-92251		BRACKET,REVOLVING	ﾌﾞﾗｹｯﾄ	1	[SASR05/AW061][SASR10/AW061] [SASR15/AW061]
-	539A8-92251		BRACKET,REVOLVING	ﾌﾞﾗｹｯﾄ	1	[SASR05/SRF][SASR10/SRF] [SASR15/SRF]
9	01100-08020		BOLT	ﾎﾞﾙﾄ	3	[SASR05][SASR10][SASR15]
10	01400-00008		NUT	ﾅｯﾄ	3	[SASR05][SASR10][SASR15]
11	514A1-42191		WIRE,LEAD	ﾜｲﾔ	1	[SASR05][SASR10][SASR15]
12	539A7-52101		WIRE,LEAD	ﾜｲﾔ	1	[SASR05][SASR10][SASR15]
13	27732-42311		CLAMP,HARNESS	ｸﾗﾝﾌﾟ	2	[SASR05][SASR10][SASR15]
14	22679-47301		GROMMET	ｸﾞﾛﾒｯﾄ	1	[SASR05][SASR10][SASR15]

FIG.72 SPEED ALARM SYSTEM [SASC]

(F50226A0) スピードアラームシステム

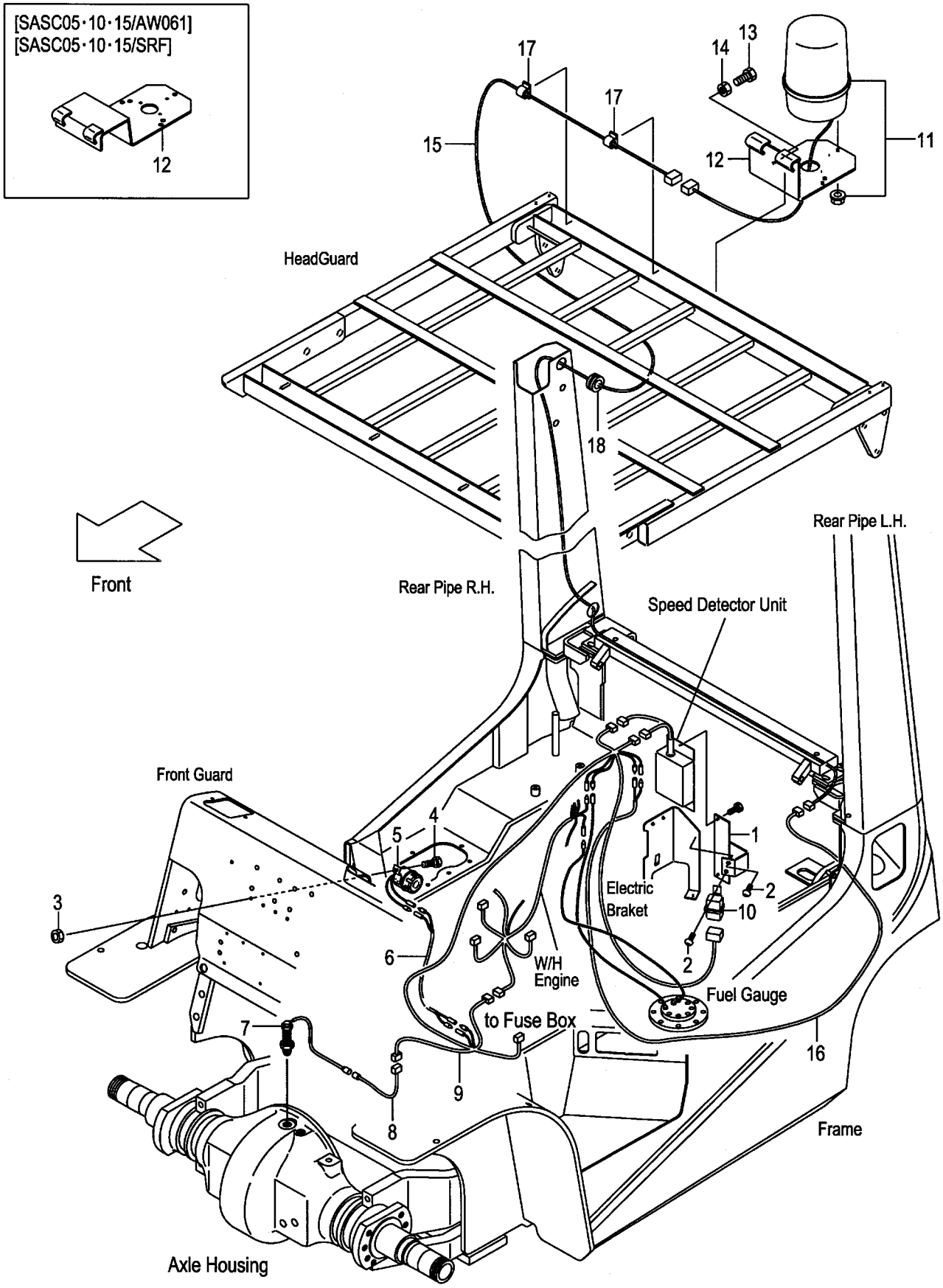

A:FG20C17 FG20T17 FG25C17 FG25T17 C:FD20C17 FD20T17 FD25C17 FD25T17
B:FG20C6 FG20T6 FG25C6 FG25T6 FG20W6 FG25W6 D:FD20C6 FD20T6 FD25C6 FD25T6 FD20W6 FD25W6

Item No	Part No.	Mark	Description		Req'd	Remarks : Serial No.
1	539A7-52001		BRACKET,CONTROLLER	ﾌﾞﾗｹｯﾄ	1	[SASC05][SASC10][SASC15]
2	214A2-42611		SCREW	ｽｸﾘｭ	2	[SASC05][SASC10][SASC15]
3	01400-00006		NUT	ﾅｯﾄ	1	[SASC05][SASC10][SASC15]
4	239A5-42381		BOLT	ﾎﾞﾙﾄ	1	[SASC05][SASC10][SASC15]
5	529F7-52241		ALARM,BUZZER	ｱﾗｰﾑ	1	[SASC05][SASC10][SASC15]
6	558A9-92001		WIRE-HARNESS,LICENCE	ﾜｲﾔﾊｰﾈｽ	1	[SASC05][SASC10][SASC15]
7	16402-54331		SENSOR	ｾﾝｻ	1	[SASC05][SASC10][SASC15]
8	534A7-50601		WIRE-HARNESS,SAS	ﾜｲﾔﾊｰﾈｽ	1	[SASC05][SASC10][SASC15]
9	539B7-52031		WIRE-HARNESS,CONTROL	ﾜｲﾔﾊｰﾈｽ	1	[SASC05][SASC10][SASC15]
10	26062-42881		RELAY,12V	ﾘﾚｰ	1	[SASC05][SASC10][SASC15]
11	514A1-41001		LIGHT,REVOLVING	ﾗｲﾄ	1	[SASC05][SASC10][SASC15]
12	529F1-42251		BRACKET,REVOLVING	ﾌﾞﾗｹｯﾄ	1	[SASC05][SASC10][SASC15]
-	539A8-92251		BRACKET,REVOLVING	ﾌﾞﾗｹｯﾄ	1	[SASR05/AW061][SASC10/AW061] [SASC15/AW061]
-	539A8-92251		BRACKET,REVOLVING	ﾌﾞﾗｹｯﾄ	1	[SASR05/SRF][SASC10/SRF] [SASC15/SRF]
13	01100-08020		BOLT	ﾎﾞﾙﾄ	3	[SASC05][SASC10][SASC15]
14	01400-00008		NUT	ﾅｯﾄ	3	[SASC05][SASC10][SASC15]
15	514A1-42191		WIRE,LEAD	ﾜｲﾔ	1	[SASC05][SASC10][SASC15]
16	539A7-52101		WIRE,LEAD	ﾜｲﾔ	1	[SASC05][SASC10][SASC15]
17	27732-42311		CLAMP,HARNESS	ｸﾗﾝﾌﾟ	2	[SASC05][SASC10][SASC15]
18	22679-47301		GROMMET	ｸﾞﾛﾒｯﾄ	1	[SASC05][SASC10][SASC15]

FIG.73 OK MONITOR [OKM]

(F50226B0) OKモニタ

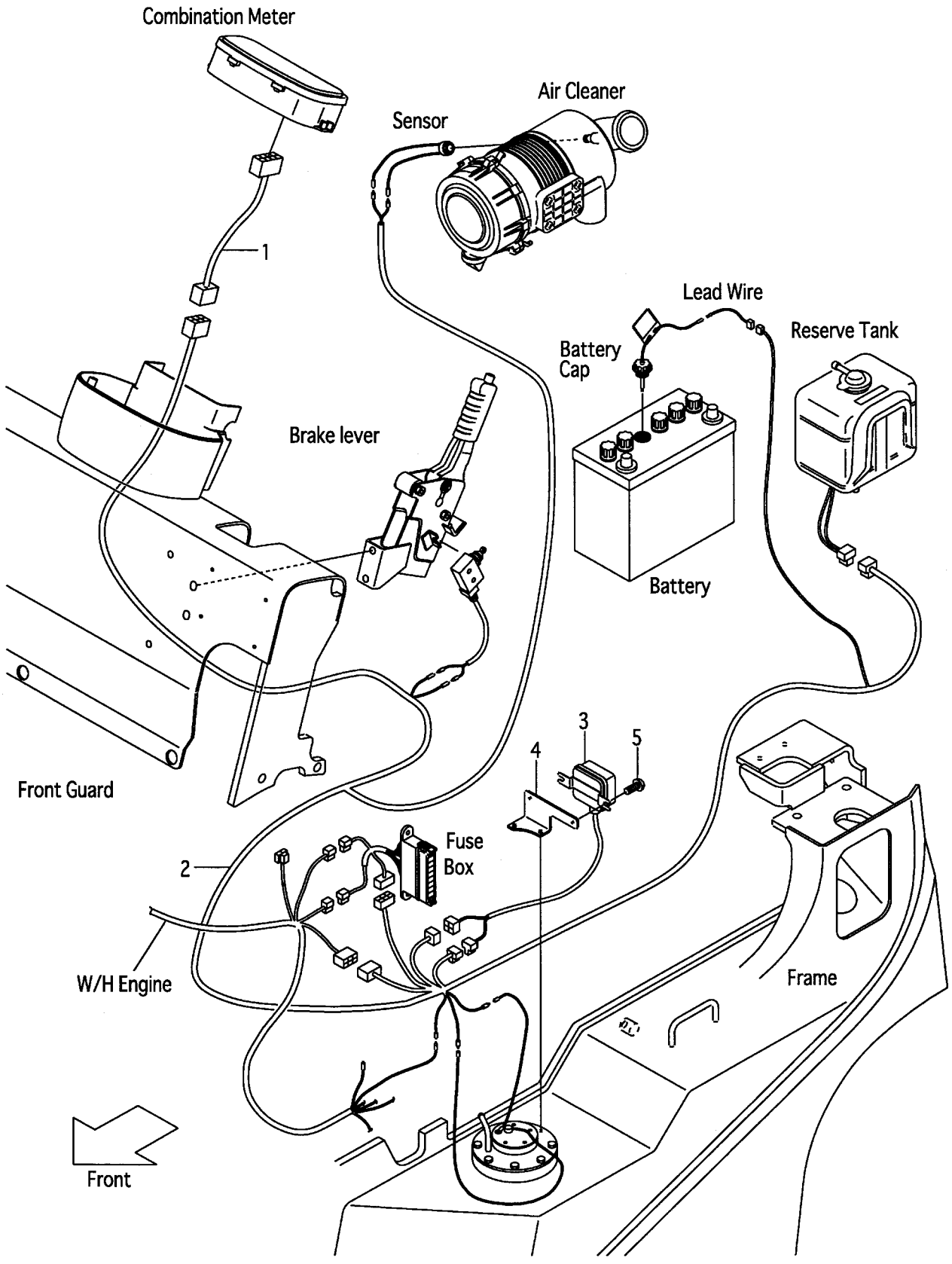

FIG.73
(F50226B0)

A:FG20C17 FG20T17 FG25C17 FG25T17 C:FD20C17 FD20T17 FD25C17 FD25T17
B:FG20C6 FG20T6 FG25C6 FG25T6 FG20W6 FG25W6 D:FD20C6 FD20T6 FD25C6 FD25T6 FD20W6 FD25W6

Item No	Part No.	Mark	Description		Req'd	Remarks : Serial No.
1	516G6-22011		WIRE,LEAD	ﾜｲﾔ	1	[OKM]
2	539A6-22011		WIRE-HARNESS,OKM	ﾜｲﾔﾊｰﾈｽ	1	[OKM]
3	229F2-42161		MODULE,WARNING	ﾓｼﾞｭｰﾙ	1	[OKM]
4	539A6-22001		BRACKET,WARN.MODULE	ﾌﾞﾗｹｯﾄ	1	[OKM]
5	214A2-42611		SCREW	ｽｸﾘｭ	2	[OKM]

FIG.74 DRIVE UNIT MOUNT (CLUTCH)

(F5022510) ﾄﾞﾗｲﾌﾞﾕﾆｯﾄﾏｳﾝﾄ

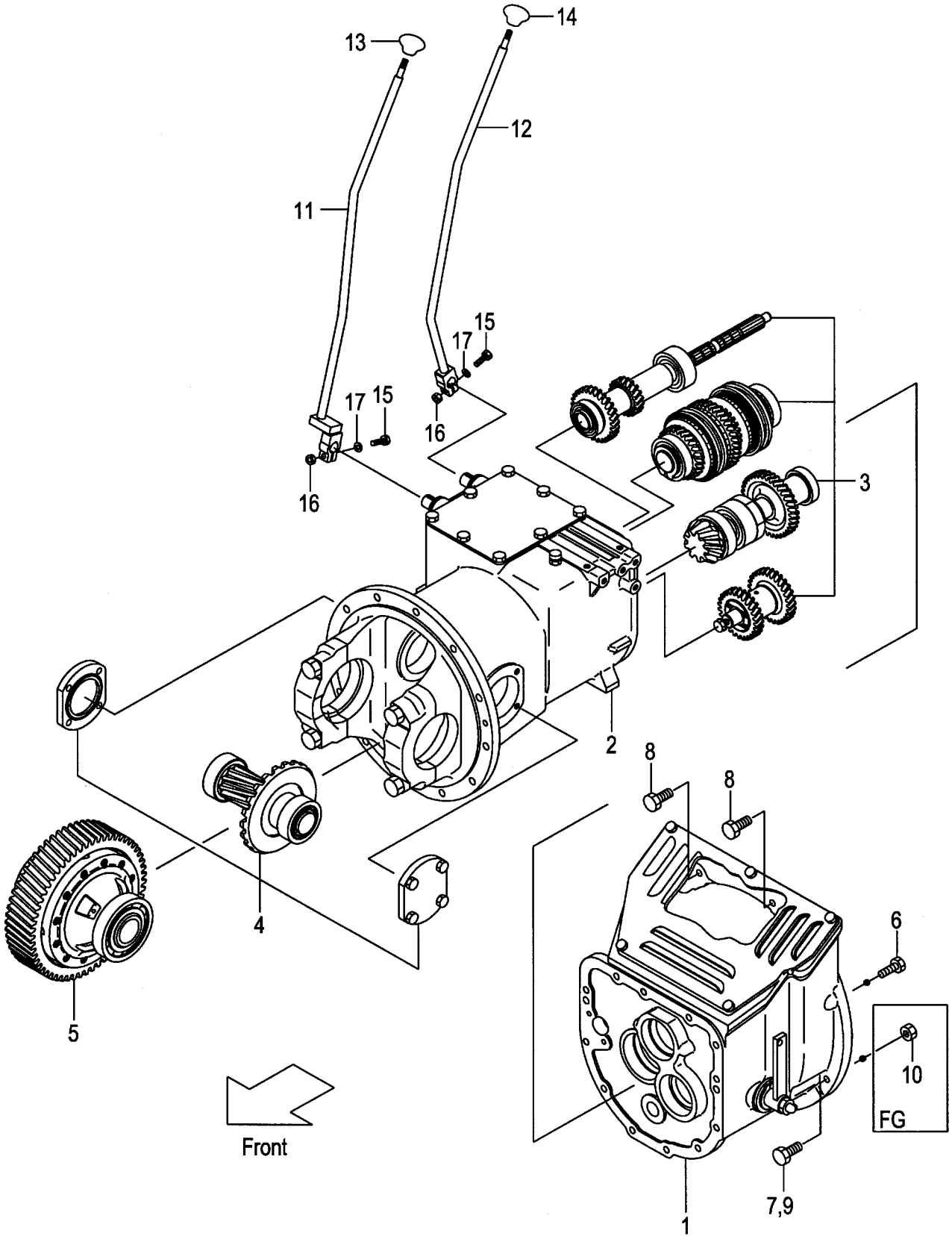

A:FG20C17 FG25C17 C:FD20C17 FD25C17
B:FG20C6 FG25C6 D:FD20C6 FD25C6

Item No	Part No.	Mark	Description		Req'd	Remarks : Serial No.
A1	136A2-50001		UNIT-ASSY,DRIVE	ﾄﾞﾗｲﾌﾞﾕﾆｯﾄｱｯｾﾝ	1	A INC.1-5
-	138A2-50001		UNIT-ASSY,DRIVE	ﾄﾞﾗｲﾌﾞﾕﾆｯﾄｱｯｾﾝ	1	C INC.1-5
-	136F2-50001		UNIT-ASSY,DRIVE	ﾄﾞﾗｲﾌﾞﾕﾆｯﾄｱｯｾﾝ	1	B,D INC.1-5
-	136A2-50041		UNIT-ASSY,DRIVE	ﾄﾞﾗｲﾌﾞﾕﾆｯﾄｱｯｾﾝ	1	A [PC] INC.1-5
-	138A2-50041		UNIT-ASSY,DRIVE	ﾄﾞﾗｲﾌﾞﾕﾆｯﾄｱｯｾﾝ	1	C [PC] INC.1-5
-	136F2-50041		UNIT-ASSY,DRIVE	ﾄﾞﾗｲﾌﾞﾕﾆｯﾄｱｯｾﾝ	1	B,D [PC] INC.1-5
1	NO PART NO.		CLUTCH	ｸﾗｯﾁ	1	A SEE FIG.75
-	NO PART NO.		CLUTCH	ｸﾗｯﾁ	1	B,C,D SEE FIG.75
-	NO PART NO.		CLUTCH	ｸﾗｯﾁ	1	A [PC]SEE FIG.75
-	NO PART NO.		CLUTCH	ｸﾗｯﾁ	1	B,C,D [PC]SEE FIG.75
2	NO PART NO.		CASE,T/M	ｹｰｽ	1	SEE FIG.76
3	NO PART NO.		GEAR,T/M	ｷﾞﾔｰ	1	A,C SEE FIG.77
-	NO PART NO.		GEAR,T/M	ｷﾞﾔｰ	1	B,D SEE FIG.77
4	NO PART NO.		REDUCTION	ﾘﾀﾞｸｼｮﾝ	1	A,C SEE FIG.86
-	NO PART NO.		REDUCTION	ﾘﾀﾞｸｼｮﾝ	1	B,D SEE FIG.86
5	NO PART NO.		DIFFERENTIAL	ﾃﾞﾌｧﾚﾝｼｬﾙ	1	SEE FIG.87
6	01184-10040		BOLT	ﾎﾞﾙﾄ	1	
7	01184-10050		BOLT	ﾎﾞﾙﾄ	5	A,B
-	01184-10055		BOLT	ﾎﾞﾙﾄ	4	C
-	01184-10035		BOLT	ﾎﾞﾙﾄ	5	D
8	01184-10035		BOLT	ﾎﾞﾙﾄ	2	A,B
-	01184-10050		BOLT	ﾎﾞﾙﾄ	2	C
-	01184-10030		BOLT	ﾎﾞﾙﾄ	2	D
9	01184-10065		BOLT	ﾎﾞﾙﾄ	1	C
10	01400-00010		NUT	ﾅｯﾄ	5	A,B
11	239A2-52001		LEVER,SPEED	ﾚﾊﾞｰ	1	
-	539A2-32001		LEVER,SPEED	ﾚﾊﾞｰ	1	[LCR]
12	239A2-52061		LEVER,DIRECTION	ﾚﾊﾞｰ	1	
-	539A2-32041		LEVER,DIRECTION	ﾚﾊﾞｰ	1	[LCR]
13	214A2-52002		KNOB,SPEED	ﾉﾌﾞ	1	
14	214A2-52012		KNOB,DIRECTION	ﾉﾌﾞ	1	
15	01100-08045		BOLT	ﾎﾞﾙﾄ	2	
16	01400-00008		NUT	ﾅｯﾄ	2	
17	02010-00008		WASHER	ﾜｯｼｬ	2	

FIG.75 CLUTCH (CLUTCH)

(F5022520) クラッチ

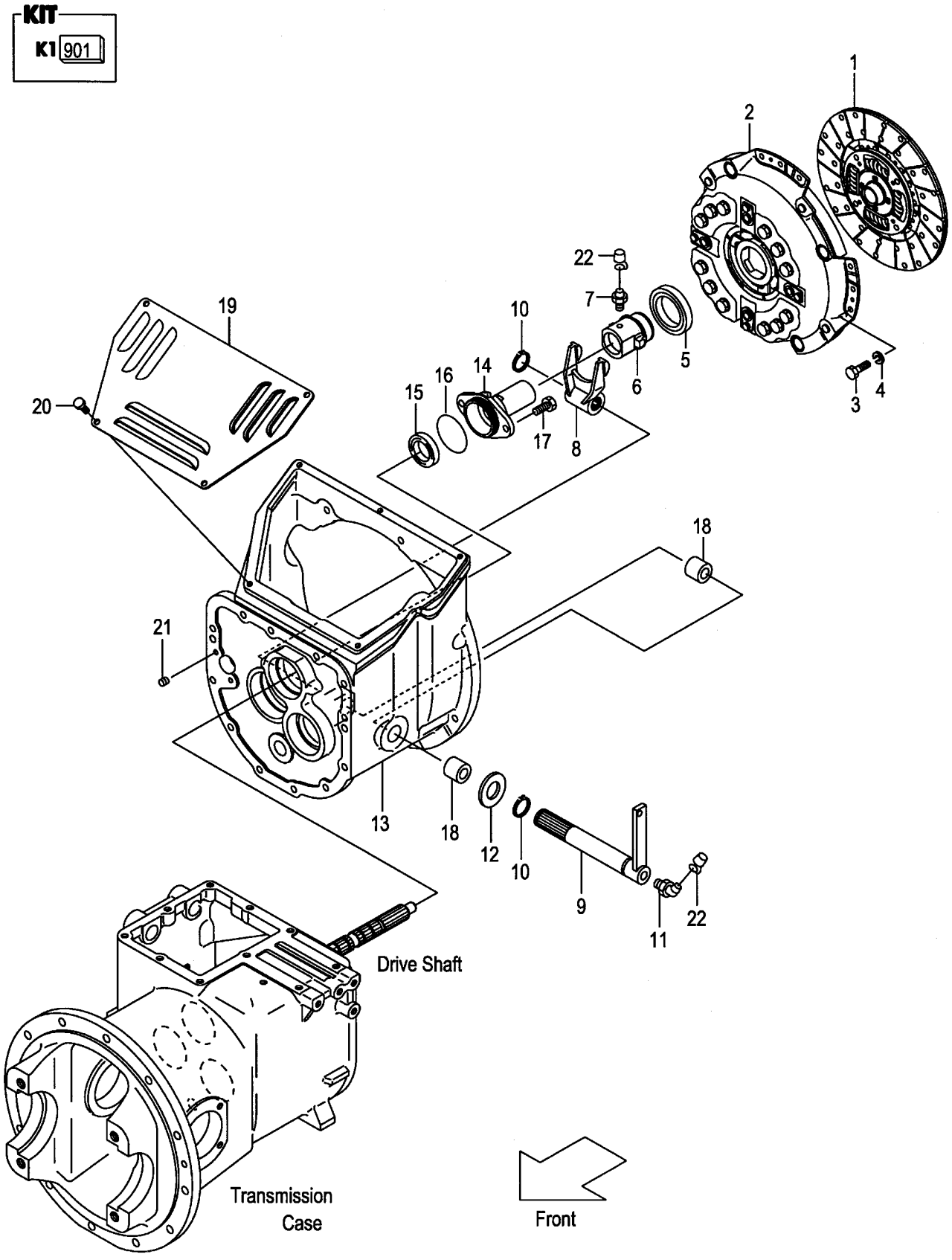

A:FG20C17 FG25C17 C:FG20C6 FG25C6
B:FD20C17 FD25C17 D:FD20C6 FD25C6

Item No	Part No.	Mark	Description		Req'd	Remarks : Serial No.
901	134A3-48911	K1	KIT,REPAIR,T/M	ﾘﾍﾟｱｷｯﾄ	1	INC.10,15,16 &,OTHERS
1	134A3-10211		DISK,CLUTCH	ﾃﾞｨｽｸ	1	
2	120S3-10201		COVER,CLUTCH	ｶﾊﾞｰ	1	A
-	131A3-10201		COVER,CLUTCH	ｶﾊﾞｰ	1	B,C,D
3	01103-08016		BOLT	ﾎﾞﾙﾄ	12	
4	02011-00008		WASHER	ﾜｯｼｬ	12	
5	15533-10301		BRG,THRUST	ﾍﾞｱﾘﾝｸﾞ	1	
6	134A3-12011		RETAINER,BRG	ﾘﾃｰﾅ	1	
7	04901-00100		FITTING	ﾌｨｯﾃｨﾝｸﾞ	1	
8	114A3-12012		YOKE	ﾖｰｸ	1	
9	114A3-10501		SHAFT	ｼｬﾌﾄ	1	
-	524G2-10502		SHAFT	ｼｬﾌﾄ	1	[PC]
10	02100-00025	*	RING,SNAP	ｽﾅｯﾌﾟﾘﾝｸﾞ	2	
11	04901-00160		FITTING	ﾌｨｯﾃｨﾝｸﾞ	1	
12	02000-00024		WASHER	ﾜｯｼｬ	1	
13	134A3-12001		HOUSING,CLUTCH	ﾊｳｼﾞﾝｸﾞ	1	
14	134A3-12021		SUPPORT,RETAINER	ｻﾎﾟｰﾄ	1	
15	134A3-12031	*	SEAL,OIL	ｼｰﾙ	1	
16	03310-00600	*	O-RING	Oﾘﾝｸﾞ	1	
17	01213-10025		BOLT	ﾎﾞﾙﾄ	2	
18	12003-12021		BUSHING	ﾌﾞｯｼﾝｸﾞ	2	
19	124G3-12011		COVER,CLUTCH-HOUSING	ｶﾊﾞｰ	1	
20	01183-08016		BOLT	ﾎﾞﾙﾄ	5	
21	01066-08008		PLUG	ﾌﾟﾗｸﾞ	2	
22	22199-12401		CAP,NIPPLE	ｷｬｯﾌﾟ	2	

FIG.76 MISSION CASE (CLUTCH)(OIL CLUTCH)

(F5022530) ミッションケース

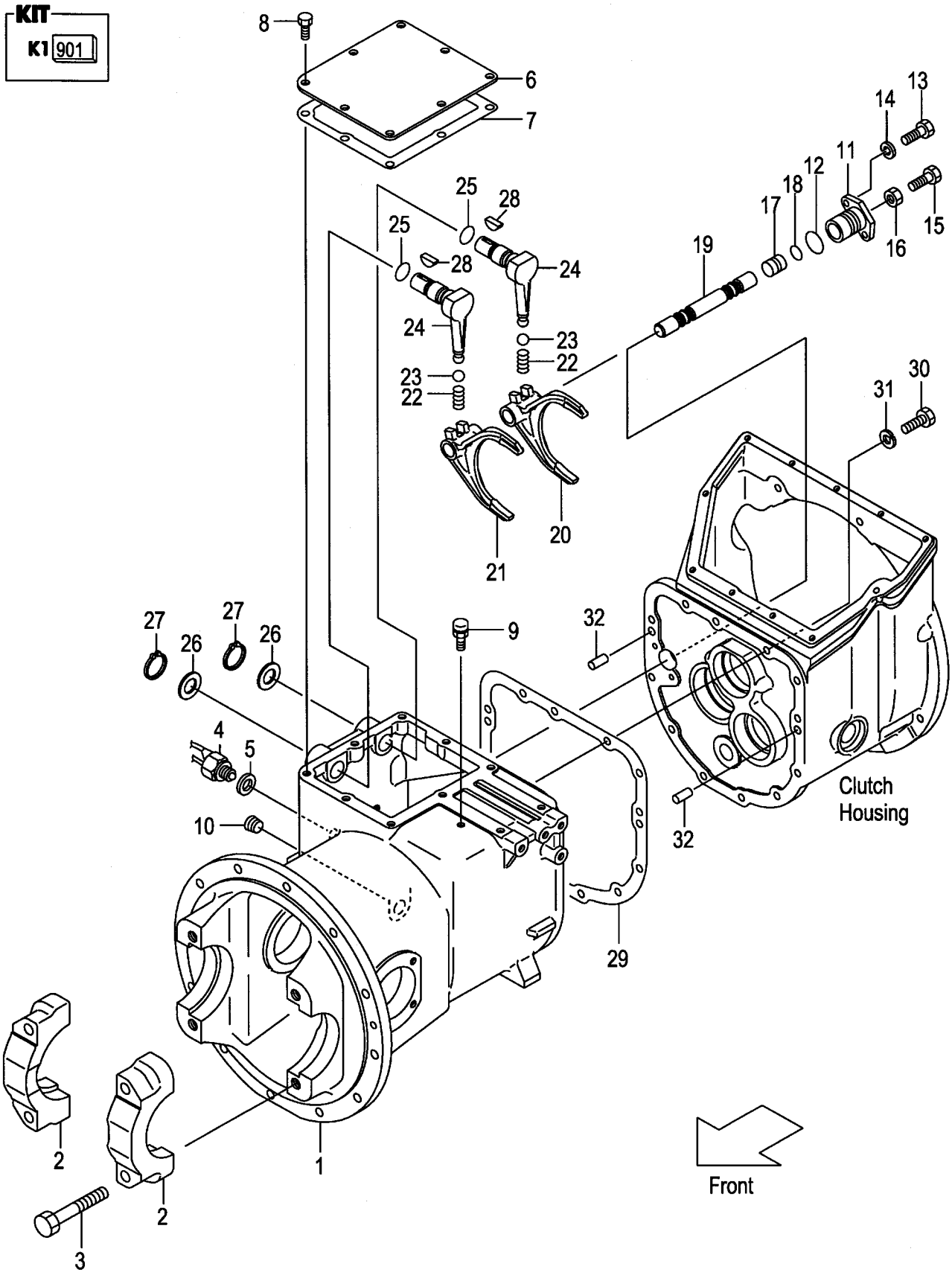

A:FG20C17 FG25C17 D:FD20C17 FD25C17
B:FG20C6 FG25C6 E:FD20C6 FD25C6
C:FG20W6 FG25W6 F:FD20W6 FD25W6

FIG.76
(F5022530)

Item No	Part No.	Mark	Description		Req'd	Remarks : Serial No.
901	134A3-48911	K1	KIT,REPAIR,T/M	ﾘﾍﾟｱｷｯﾄ	1	A,B,D,E INC.5,7,12,18,25,27-29 & OTHERS
A1	134A3-40201		CASE-ASSY,T/M	ﾄﾗﾝｽﾐｯｼｮﾝｹｰｽｱｯｾﾝ	1	INC.1,2
1	NO PART NO.	#	CASE,T/M	ｹｰｽ	1	
2	NO PART NO.	#	CAP,BRG	ｷｬｯﾌﾟ	2	
3	134A3-42221		BOLT	ﾎﾞﾙﾄ	4	
4	12003-42451		SWITCH,BACK-LAMP	ｽｲｯﾁ	2	
5	12003-42461	*	PACKING,BACK-LAMP	ﾊﾟｯｷﾝｸﾞ	2	
6	134A3-42021		COVER,CASE	ｶﾊﾞｰ	1	
7	134A3-42031	*	GASKET,CASE-COVER	ｶﾞｽｹｯﾄ	1	
8	01184-10016		BOLT	ﾎﾞﾙﾄ	8	
9	15573-42151		BREATHER,AIR	ﾌﾞﾘｰｻﾞ	1	
10	12163-82541		PLUG	ﾌﾟﾚｰﾄ	1	
11	12003-42052		SUPPORT,ARM-SHAFT	ｻﾎﾟｰﾄ	1	
12	03310-00300	*	O-RING	Oﾘﾝｸﾞ	1	
13	01103-08020		BOLT	ﾎﾞﾙﾄ	2	
14	02011-00008		WASHER	ﾜｯｼｬ	2	
15	01123-10045		BOLT	ﾎﾞﾙﾄ	1	
16	01400-00010		NUT	ﾅｯﾄ	1	
17	12003-42061		SPACER	ｽﾍﾟｰｻ	1	
18	03300-00160	*	O-RING	Oﾘﾝｸﾞ	1	
19	134A3-42401		ROD,SHIFT	ﾛｯﾄﾞ	1	
20	134A3-42411		FORK,SHIFT,F-R	ﾌｫｰｸ	1	
21	134A3-42421		FORK,SHIFT,H-L	ﾌｫｰｸ	1	
22	12003-42421		SPRING	ｽﾌﾟﾘﾝｸﾞ	2	
23	03190-00013		BALL,STEEL	ﾎﾞｰﾙ	2	
24	134A3-42431		LEVER,SHIFT	ﾚﾊﾞｰ	2	
25	134A3-42451	*	O-RING	Oﾘﾝｸﾞ	2	
26	02000-00022		WASHER	ﾜｯｼｬ	2	
27	02100-00022	*	RING,SNAP	ｽﾅｯﾌﾟﾘﾝｸﾞ	2	
28	02360-05019	*	KEY	ｷｰ	2	
29	134A3-12051	*	GASKET	ｶﾞｽｹｯﾄ	1	
30	01103-10030		BOLT	ﾎﾞﾙﾄ	12	
31	02011-00010		WASHER	ﾜｯｼｬ	12	
32	02212-12020		PIN,PARALLEL	ﾋﾟﾝ	2	

FIG.77 MISSION GEAR (CLUTCH)(OIL CLUTCH)

(F5022540) ミッションギヤー

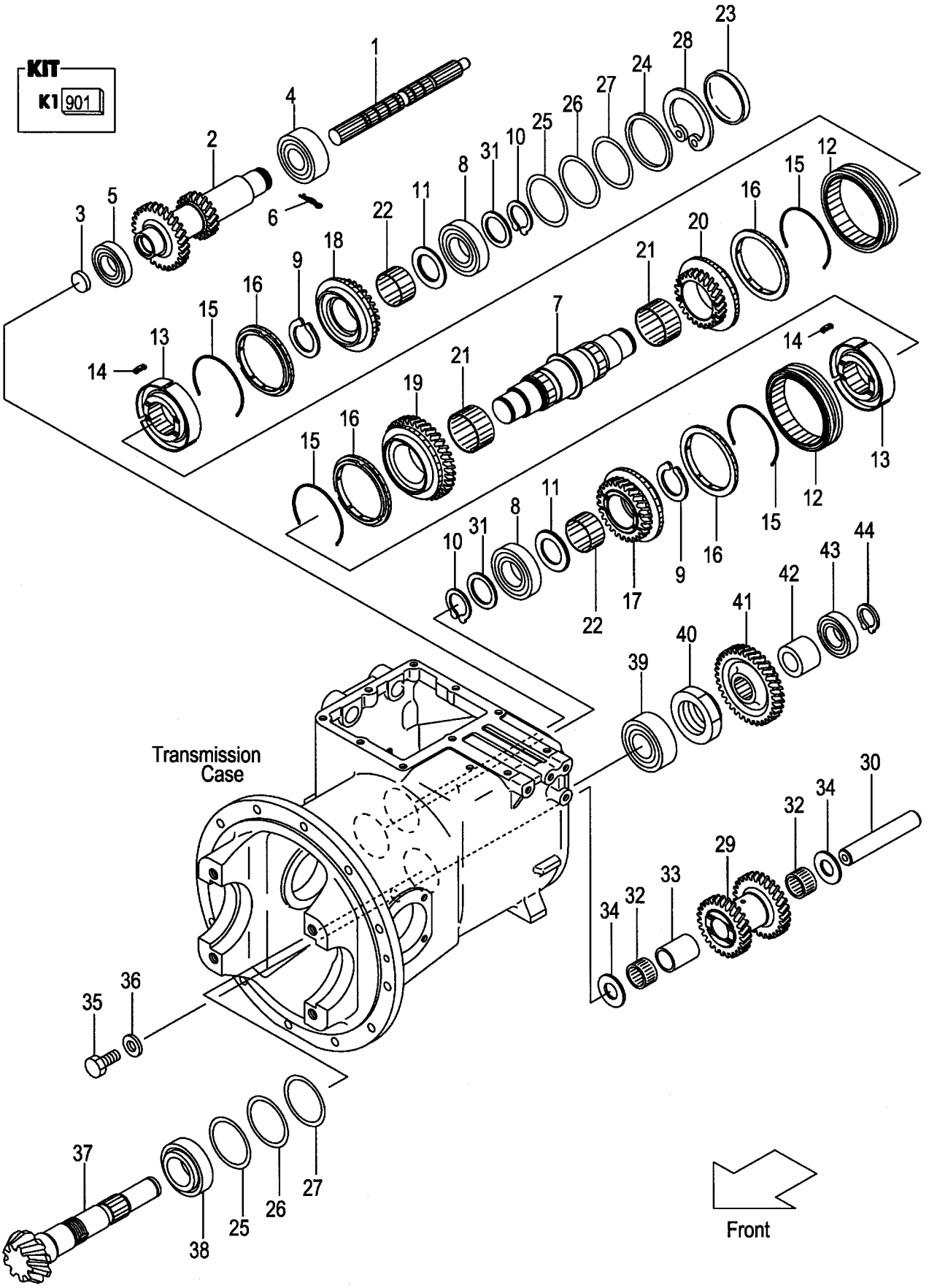

A:FG20C17 FG25C17 D:FD20C17 FD25C17
B:FG20C6 FG25C6 E:FD20C6 FD25C6
C:FG20W6 FG25W6 F:FD20W6 FD25W6

FIG.77
(F5022540)

Item No	Part No.	Mark	Description		Req'd	Remarks : Serial No.
901	134A3-48911	K1	KIT,REPAIR,T/M	ﾘﾍﾟｱｷｯﾄ	1	A,B,D,E INC.6,9,10,23,25-28,40,44 & OTHERS
1	134A3-42051		SHAFT,MAIN-DRIVE	ｼｬﾌﾄ	1	
2	136F3-42001		SHAFT,INPUT	ｼｬﾌﾄ	1	
3	134A3-42071		CAP	ｷｬｯﾌﾟ	1	
4	03000-06207		BRG,BALL	ﾍﾞｱﾘﾝｸﾞ	1	
5	03000-06208		BRG,BALL	ﾍﾞｱﾘﾝｸﾞ	1	
6	134A3-42081	*	PIN,SNAP	ﾋﾟﾝ	1	
7	134A3-42101		SHAFT,MAIN	ｼｬﾌﾄ	1	
8	134A3-42211		BRG,BALL	ﾍﾞｱﾘﾝｸﾞ	2	
9	02120-00050	*	RING,SNAP	ｽﾅｯﾌﾟﾘﾝｸﾞ	2	
10	02100-00040	*	RING,SNAP	ｽﾅｯﾌﾟﾘﾝｸﾞ	2	
11	124T3-43001		PLATE,THRUST	ﾌﾟﾚｰﾄ	2	
A1	134A3-40221		SYNCHRONIZER-ASSY	ｼﾝｸﾛﾅｲｻﾞｱｯｾﾝ	2	INC.12-15
12	134A3-42111		SLEEVE	ｽﾘｰﾌﾞ	2	
13	134A3-42121		HUB,CLUTCH	ﾊﾌﾞ	2	
14	15573-42011		INSERT	ｲﾝｻｰﾄ	6	
15	134A3-42131		SPRING	ｽﾌﾟﾘﾝｸﾞ	4	
16	134A3-42141		RING,BLOCK	ﾘﾝｸﾞ	4	
17	139A3-42011		GEAR,HIGH	ｷﾞﾔｰ	1	
18	134A3-42151		GEAR,HIGH & FORWAD	ｷﾞﾔｰ	1	
19	131A3-42021		GEAR,LOW-SPEED	ｷﾞﾔｰ	1	
20	134A3-42171		GEAR,REVERSE	ｷﾞﾔｰ	1	
21	134A3-42181		BRG,NEEDLE	ﾍﾞｱﾘﾝｸﾞ	2	
22	134A3-42191		BRG,NEEDLE	ﾍﾞｱﾘﾝｸﾞ	2	
23	134A3-42201	*	CAP	ｷｬｯﾌﾟ	1	
24	10113-40171		WASHER	ﾜｯｼｬ	1	
25	12003-42311	*	SHIM,T-0.5	ｼﾑ	2	
26	12003-42321	*	SHIM,T-0.2	ｼﾑ	4	
27	12003-42331	*	SHIM,T-0.1	ｼﾑ	2	
28	02121-00080	*	RING,SNAP	ｽﾅｯﾌﾟﾘﾝｸﾞ	1	
29	134A3-42251		GEAR,COUNTER	ｷﾞﾔｰ	1	
30	134A3-42261		SHAFT,COUNTER-GEAR	ｼｬﾌﾄ	1	
31	15913-42511		SPACER	ｽﾍﾟｰｻ	2	
32	12003-42281		BRG,NEEDLE	ﾍﾞｱﾘﾝｸﾞ	2	
33	12003-42291		SPACER	ｽﾍﾟｰｻ	1	
34	134A3-42271		PLATE,THRUST	ﾌﾟﾚｰﾄ	2	
35	01103-10020		BOLT	ﾎﾞﾙﾄ	1	
36	02000-00010		WASHER	ﾜｯｼｬ	1	
37	120S3-42011		SHAFT,OUTPUT	ｼｬﾌﾄ	1	A,D
-	134A3-42301		SHAFT,OUTPUT	ｼｬﾌﾄ	1	B,C,E,F
38	115G3-82641		BRG,TAPER-ROLLER	ﾍﾞｱﾘﾝｸﾞ	1	
39	12003-43031		BRG,TAPER-ROLLER	ﾍﾞｱﾘﾝｸﾞ	1	
40	115G3-82471	*	NUT	ﾅｯﾄ	1	
41	134A3-42321		GEAR,OUTPUT	ｷﾞﾔｰ	1	
42	134A3-42331		SPACER	ｽﾍﾟｰｻ	1	
43	03000-06306		BRG,BALL	ﾍﾞｱﾘﾝｸﾞ	1	
44	02100-00030	*	RING,SNAP	ｽﾅｯﾌﾟﾘﾝｸﾞ	1	

FIG.78 DRIVE UNIT MOUNT (OIL CLUTCH)

(F50225J0) ﾄﾞﾗｲﾌﾞﾕﾆｯﾄﾏｳﾝﾄ

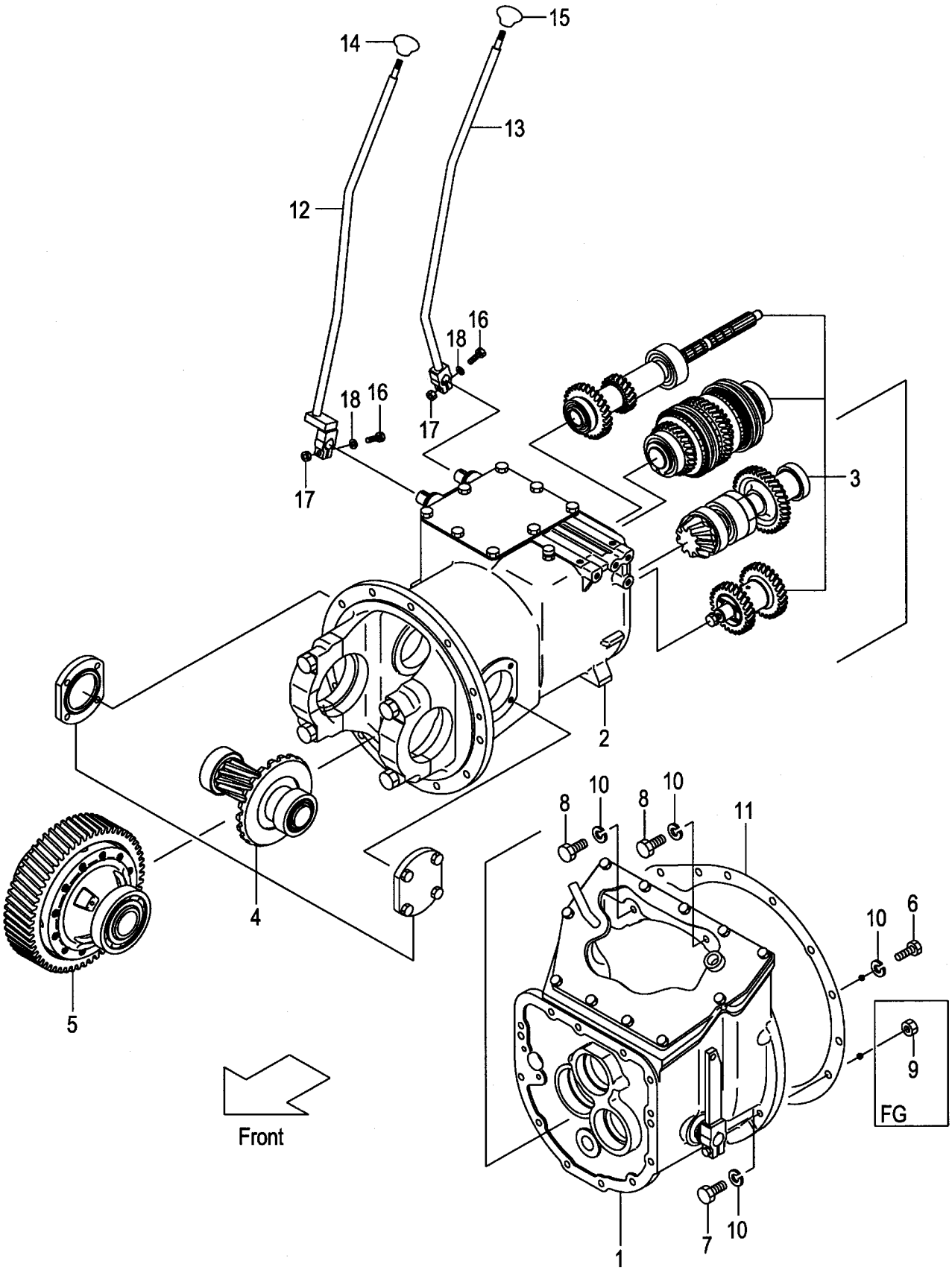

A:FG20W6 FG25W6
B:FD20W6 FD25W6

FIG.78
(F50225J0)

Item No	Part No.	Mark	Description		Req'd	Remarks : Serial No.
A1	136S2-50001		UNIT-ASSY,DRIVE	ﾄﾞﾗｲﾌﾞﾕﾆｯﾄｱｯｾﾝ	1	INC.1-5
1	NO PART NO.		CLUTCH	ｸﾗｯﾁ	1	SEE FIG.79
2	NO PART NO.		CASE,T/M	ｹｰｽ	1	SEE FIG.76
3	NO PART NO.		GEAR,T/M	ｷﾞﾔｰ	1	SEE FIG.77
4	NO PART NO.		REDUCTION	ﾘﾀﾞｸｼｮﾝ	1	SEE FIG.86
5	NO PART NO.		DIFFERENTIAL	ﾃﾞﾌｧﾚﾝｼｬﾙ	1	SEE FIG.87
6	01103-10040		BOLT	ﾎﾞﾙﾄ	1	
7	01103-10050		BOLT	ﾎﾞﾙﾄ	5	A
-	01103-10035		BOLT	ﾎﾞﾙﾄ	5	B
8	01103-10035		BOLT	ﾎﾞﾙﾄ	2	A
-	01103-10030		BOLT	ﾎﾞﾙﾄ	2	B
9	01400-00010		NUT	ﾅｯﾄ	5	A
10	02011-00010		WASHER	ﾜｯｼｬ	8	
11	213L2-52001		GASKET	ｶﾞｽｹｯﾄ	1	
12	239A2-52001		LEVER,SPEED	ﾚﾊﾞｰ	1	
-	539A2-32001		LEVER,SPEED	ﾚﾊﾞｰ	1	[LCR]
13	239A2-52061		LEVER,DIRECTION	ﾚﾊﾞｰ	1	
-	539A2-32041		LEVER,DIRECTION	ﾚﾊﾞｰ	1	[LCR]
14	214A2-52002		KNOB,SPEED	ﾉﾌﾞ	1	
15	214A2-52012		KNOB,DIRECTION	ﾉﾌﾞ	1	
16	01100-08045		BOLT	ﾎﾞﾙﾄ	2	
17	01400-00008		NUT	ﾅｯﾄ	2	
18	02010-00008		WASHER	ﾜｯｼｬ	2	

FIG.79 CLUTCH (OIL CLUTCH)

(F50225K0) クラッチ

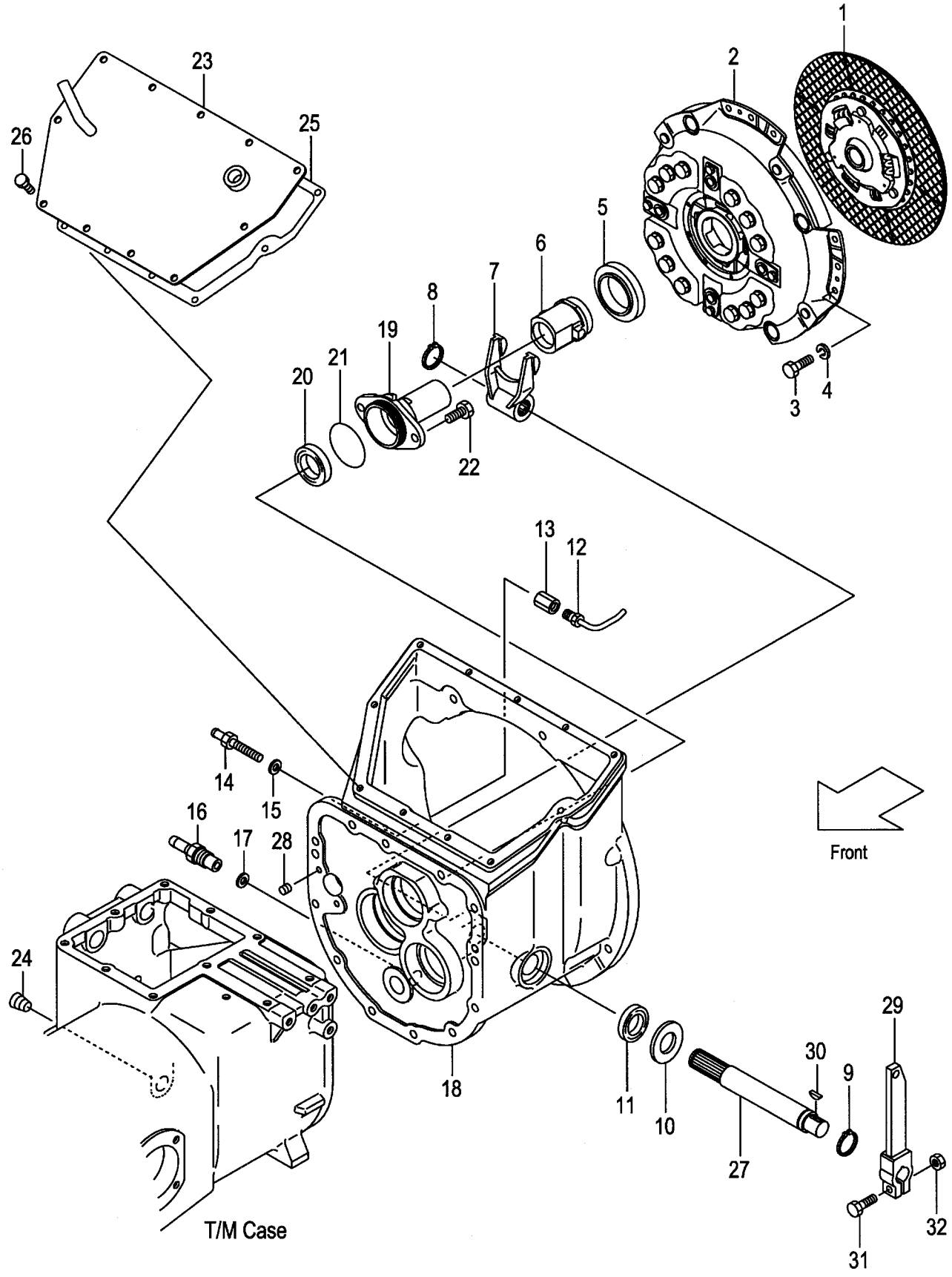

A:FG20W6 FG25W6
B:FD20W6 FD25W6

Item No	Part No.	Mark	Description		Req'd	Remarks : Serial No.
1	134H3-10211		DISK,CLUTCH	ﾃﾞｨｽｸ	1	
2	134H3-10201		COVER,CLUTCH	ｶﾊﾞｰ	1	
3	01103-08016		BOLT	ﾎﾞﾙﾄ	12	
4	02011-00008		WASHER	ﾜｯｼｬ	12	
5	55593-62061		BRG,THRUST	ﾍﾞｱﾘﾝｸﾞ	1	
6	134H3-12022		RETAINER,BRG	ﾘﾃｰﾅ	1	
7	114A3-12012		YOKE	ﾖｰｸ	1	
8	02100-00025		RING,SNAP	ｽﾅｯﾌﾟﾘﾝｸﾞ	1	
9	02100-00028		RING,SNAP	ｽﾅｯﾌﾟﾘﾝｸﾞ	1	
10	02000-00027		WASHER	ﾜｯｼｬ	1	
11	19502-52551		SEAL,OIL	ｼｰﾙ	1	
12	131N3-12011		NOZZLE,SPRAY	ﾉｽﾞﾙ	1	
13	131N3-12031		ADAPTER	ｱﾀﾞﾌﾟﾀ	1	
14	131N3-12041		NIPPLE	ﾆｯﾌﾟﾙ	1	
15	15943-82701		WASHER	ﾜｯｼｬ	1	
16	131N3-12151		FITTING,HOSE	ﾌｨｯﾃｨﾝｸﾞ	1	
17	22197-52091		WASHER	ﾜｯｼｬ	1	
18	134H3-12001		HOUSING,CLUTCH	ﾊｳｼﾞﾝｸﾞ	1	
19	134A3-12021		SUPPORT,RETAINER	ｻﾎﾟｰﾄ	1	
20	134H3-12011		SEAL,OIL	ｼｰﾙ	1	
21	03310-00600		O-RING	Oﾘﾝｸﾞ	1	
22	01213-10025		BOLT	ﾎﾞﾙﾄ	2	
23	131N3-12101		COVER,CLUTCH-HOUSING	ｶﾊﾞｰ	1	
24	12163-82541		PLUG	ﾌﾟﾗｸﾞ	1	
25	524G3-62121		GASKET	ｶﾞｽｹｯﾄ	1	
26	01183-08016		BOLT	ﾎﾞﾙﾄ	11	
27	114L3-12022		SHAFT	ｼｬﾌﾄ	1	
28	01066-08008		PLUG	ﾌﾟﾗｸﾞ	2	
29	114L3-12031		ARM	ｱｰﾑ	1	
30	02360-05019		KEY	ｷｰ	1	
31	01183-08035		BOLT	ﾎﾞﾙﾄ	1	
32	01400-00008		NUT	ﾅｯﾄ	1	

FIG.80 DRIVE UNIT MOUNT (TOR-CON)

(F50225A0) ﾄﾞﾗｲﾌﾞﾕﾆｯﾄﾏｳﾝﾄ

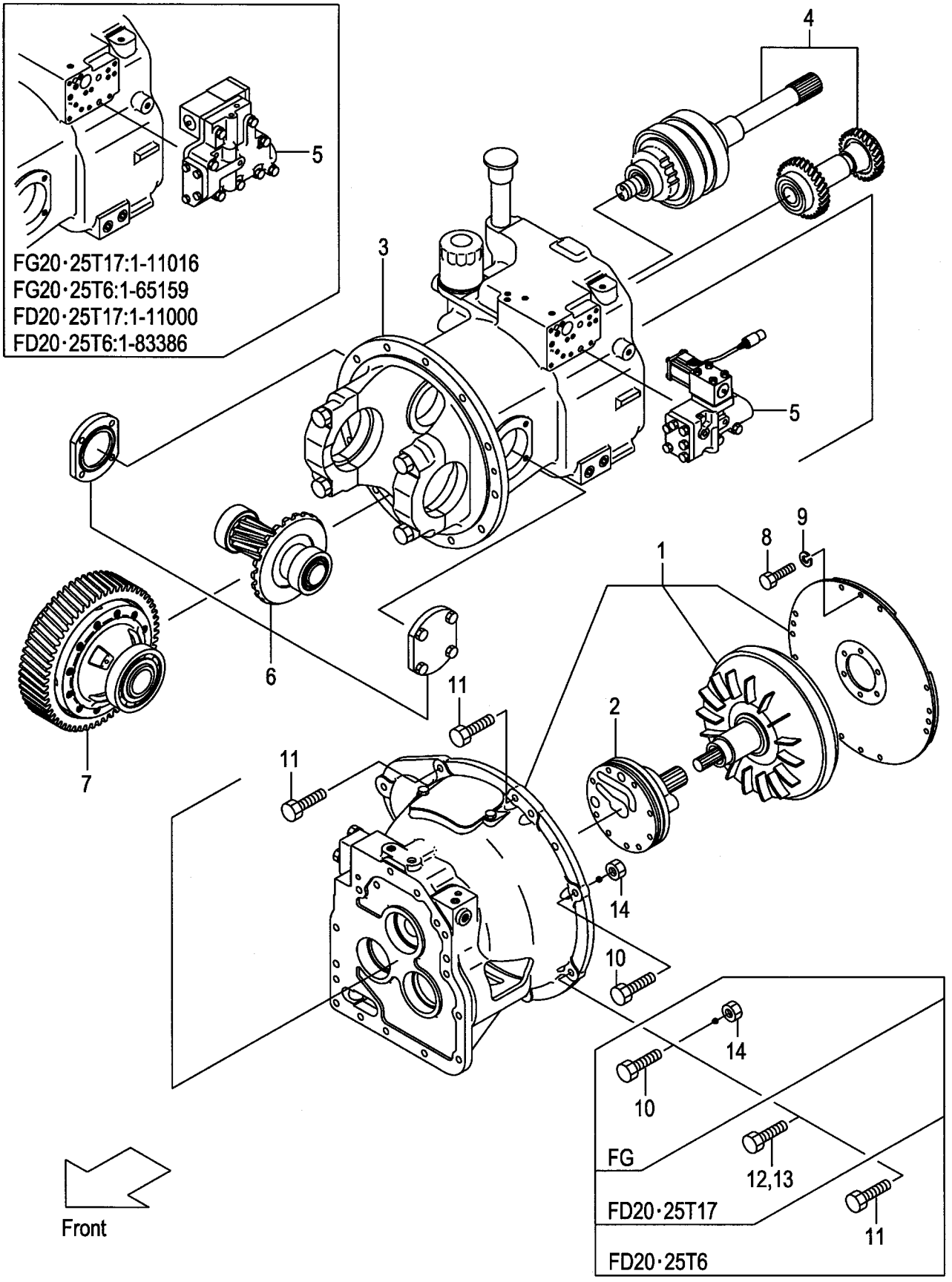

A:FG20T17 FG25T17 C:FD20T17 FD25T17
B:FG20T6 FG25T6 D:FD20T6 FD25T6

Item No	Part No.	Mark	Description		Req'd	Remarks : Serial No.
A1	136B2-50001		UNIT-ASSY,DRIVE	ﾄﾞﾗｲﾌﾞﾕﾆｯﾄｱｯｾﾝ	1	A:1-11016 INC.1-7
-	136B2-50002		UNIT-ASSY,DRIVE	ﾄﾞﾗｲﾌﾞﾕﾆｯﾄｱｯｾﾝ	1	A:11017- INC.1-7
-	137B2-50001		UNIT-ASSY,DRIVE	ﾄﾞﾗｲﾌﾞﾕﾆｯﾄｱｯｾﾝ	1	B:1-65159 INC.1-7
-	137B2-50002		UNIT-ASSY,DRIVE	ﾄﾞﾗｲﾌﾞﾕﾆｯﾄｱｯｾﾝ	1	B:65160- INC.1-7
-	520R8-30101		UNIT-ASSY,DRIVE	ﾄﾞﾗｲﾌﾞﾕﾆｯﾄｱｯｾﾝ	1	C:1-11000 INC.1-7
-	520R8-30102		UNIT-ASSY,DRIVE	ﾄﾞﾗｲﾌﾞﾕﾆｯﾄｱｯｾﾝ	1	C:11001- INC.1-7
-	534G8-30101		UNIT-ASSY,DRIVE	ﾄﾞﾗｲﾌﾞﾕﾆｯﾄｱｯｾﾝ	1	D:1-83386 INC.1-7
-	534G8-30102		UNIT-ASSY,DRIVE	ﾄﾞﾗｲﾌﾞﾕﾆｯﾄｱｯｾﾝ	1	D:83387- INC.1-7
-	537B3-80001		UNIT-ASSY,DRIVE	ﾄﾞﾗｲﾌﾞﾕﾆｯﾄｱｯｾﾝ	1	B:1-65159 [EXE][EXN] INC.1-7
-	537B3-80002		UNIT-ASSY,DRIVE	ﾄﾞﾗｲﾌﾞﾕﾆｯﾄｱｯｾﾝ	1	B:65160- [EXE][EXN] INC.1-7
-	534G3-80101		UNIT-ASSY,DRIVE	ﾄﾞﾗｲﾌﾞﾕﾆｯﾄｱｯｾﾝ	1	D:1-83386 [EXE][EXN] INC.1-7
-	534G3-80102		UNIT-ASSY,DRIVE	ﾄﾞﾗｲﾌﾞﾕﾆｯﾄｱｯｾﾝ	1	D:83387- [EXE][EXN] INC.1-7
-	136G2-50001		UNIT-ASSY,DRIVE	ﾄﾞﾗｲﾌﾞﾕﾆｯﾄｱｯｾﾝ	1	B:1-65159 [EXK] INC.1-7
-	136G2-50002		UNIT-ASSY,DRIVE	ﾄﾞﾗｲﾌﾞﾕﾆｯﾄｱｯｾﾝ	1	B:65160- [EXK] INC.1-7
-	138G2-50001		UNIT-ASSY,DRIVE	ﾄﾞﾗｲﾌﾞﾕﾆｯﾄｱｯｾﾝ	1	D:1-83386 [EXK] INC.1-7
-	138G2-50002		UNIT-ASSY,DRIVE	ﾄﾞﾗｲﾌﾞﾕﾆｯﾄｱｯｾﾝ	1	D:83387- [EXK] INC.1-7
-	537B4-50001		UNIT-ASSY,DRIVE	ﾄﾞﾗｲﾌﾞﾕﾆｯﾄｱｯｾﾝ	1	B:1-65159 [DNS] INC.1-7
-	537B4-50002		UNIT-ASSY,DRIVE	ﾄﾞﾗｲﾌﾞﾕﾆｯﾄｱｯｾﾝ	1	B:65160- [DNS] INC.1-7
-	539B4-50001		UNIT-ASSY,DRIVE	ﾄﾞﾗｲﾌﾞﾕﾆｯﾄｱｯｾﾝ	1	D:1-83386 [DNS] INC.1-7
-	539B4-50002		UNIT-ASSY,DRIVE	ﾄﾞﾗｲﾌﾞﾕﾆｯﾄｱｯｾﾝ	1	D:83387- [DNS] INC.1-7
1	NO PART NO.		CASE,T/C	ｹｰｽ	1	A,B SEE FIG.81
-	NO PART NO.		CASE,T/C	ｹｰｽ	1	C,D SEE FIG.81
2	NO PART NO.		PUMP	ﾎﾟﾝﾌﾟ	1	SEE FIG.82
3	NO PART NO.		CASE,T/M	ｹｰｽ	1	A,C SEE FIG.83
-	NO PART NO.		CASE,T/M	ｹｰｽ	1	B,D SEE FIG.83

FIG.80 DRIVE UNIT MOUNT (TOR-CON)

(F50225A0) ﾄﾞﾗｲﾌﾞﾕﾆｯﾄﾏｳﾝﾄ

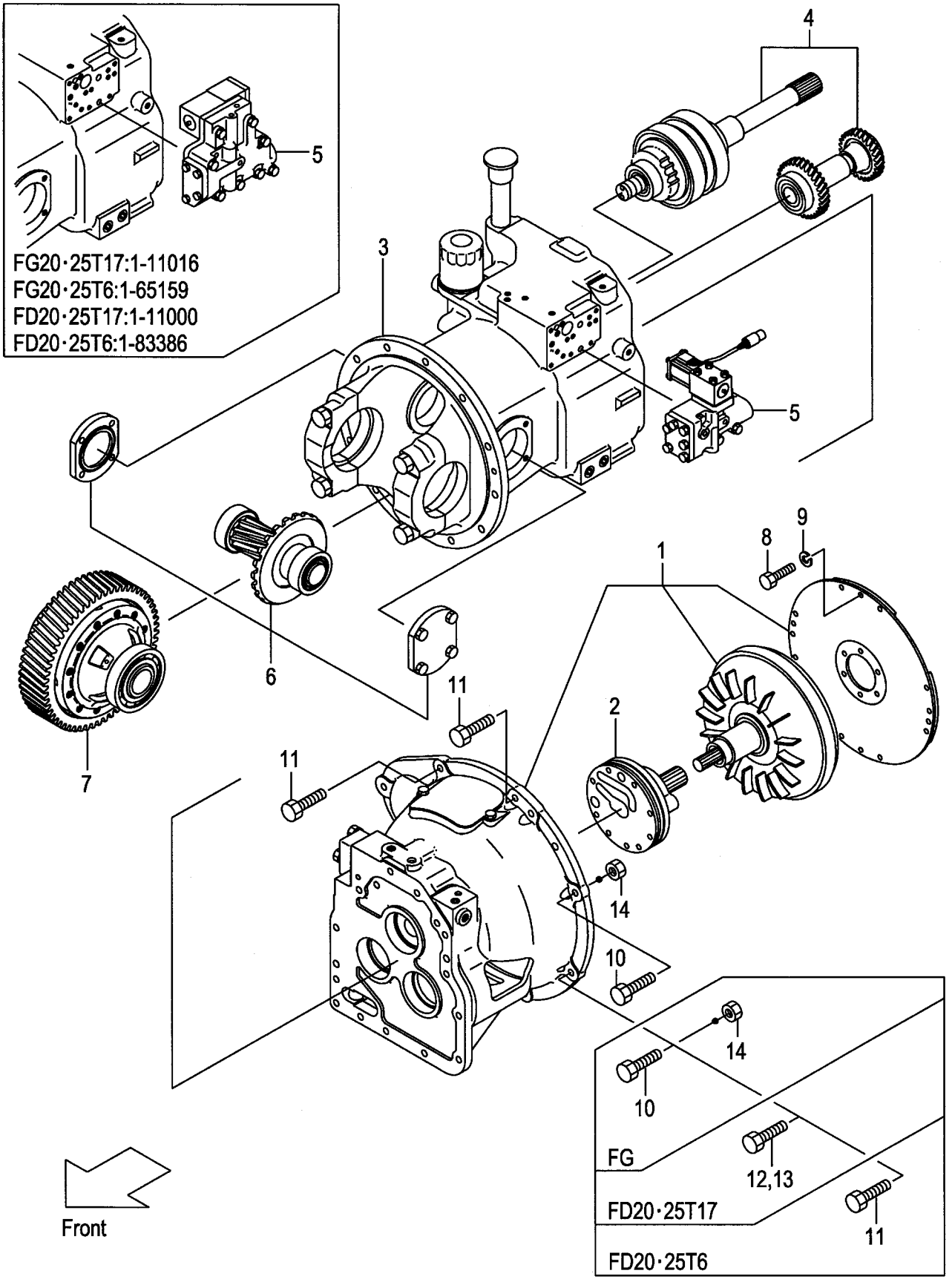

A:FG20T17 FG25T17 C:FD20T17 FD25T17
B:FG20T6 FG25T6 D:FD20T6 FD25T6

Item No	Part No.	Mark	Description		Req'd	Remarks : Serial No.
-	NO PART NO.		CASE,T/M	ｹｰｽ	1	B,D
						[EXE][EXN]SEE FIG.83
-	NO PART NO.		CASE,T/M	ｹｰｽ	1	B,D
						[EXK]SEE FIG.83
4	NO PART NO.		PACK,CLUTCH	ﾊﾟｯｸ	1	SEE FIG.84
-	NO PART NO.		PACK,CLUTCH	ﾊﾟｯｸ	1	B,D
						[EXK]SEE FIG.84
5	NO PART NO.		VALVE	ﾊﾞﾙﾌﾞ	1	A:1-11016
						B:1-65159
						C:1-11000
						D:1-83386
						SEE FIG.85
-	NO PART NO.		VALVE	ﾊﾞﾙﾌﾞ	1	A:11017-
						B:65160-
						C:11001-
						D:83387-
						SEE FIG.85A
6	NO PART NO.		REDUCTION	ﾘﾀﾞｸｼｮﾝ	1	A,C
						SEE FIG.86
-	NO PART NO.		REDUCTION	ﾘﾀﾞｸｼｮﾝ	1	B,D
						SEE FIG.86
7	NO PART NO.		DIFFERENTIAL	ﾃﾞﾌｧﾚﾝｼｬﾙ	1	SEE FIG.87
-	NO PART NO.		DIFFERENTIAL	ﾃﾞﾌｧﾚﾝｼｬﾙ	1	B,D
						[DNS]SEE FIG.87
8	01103-10016		BOLT	ﾎﾞﾙﾄ	8	A,B
-	01103-08020		BOLT	ﾎﾞﾙﾄ	12	C,D
9	02011-00010		WASHER	ﾜｯｼｬ	8	A,B
-	02011-00008		WASHER	ﾜｯｼｬ	12	C,D
10	01184-10050		BOLT	ﾎﾞﾙﾄ	6	A,B
-	01184-10065		BOLT	ﾎﾞﾙﾄ	1	C
-	01184-10050		BOLT	ﾎﾞﾙﾄ	1	D
11	01184-10035		BOLT	ﾎﾞﾙﾄ	2	A,B
-	01184-10050		BOLT	ﾎﾞﾙﾄ	2	C
-	01184-10030		BOLT	ﾎﾞﾙﾄ	7	D
12	01184-10040		BOLT	ﾎﾞﾙﾄ	1	C
13	01184-10055		BOLT	ﾎﾞﾙﾄ	4	C
14	01400-00010		NUT	ﾅｯﾄ	6	A,B
-	01400-00010		NUT	ﾅｯﾄ	1	C,D

FIG.81 TORQUE CONVERTER CASE (TOR-CON)

(F50225B0) トルクコンバータケース

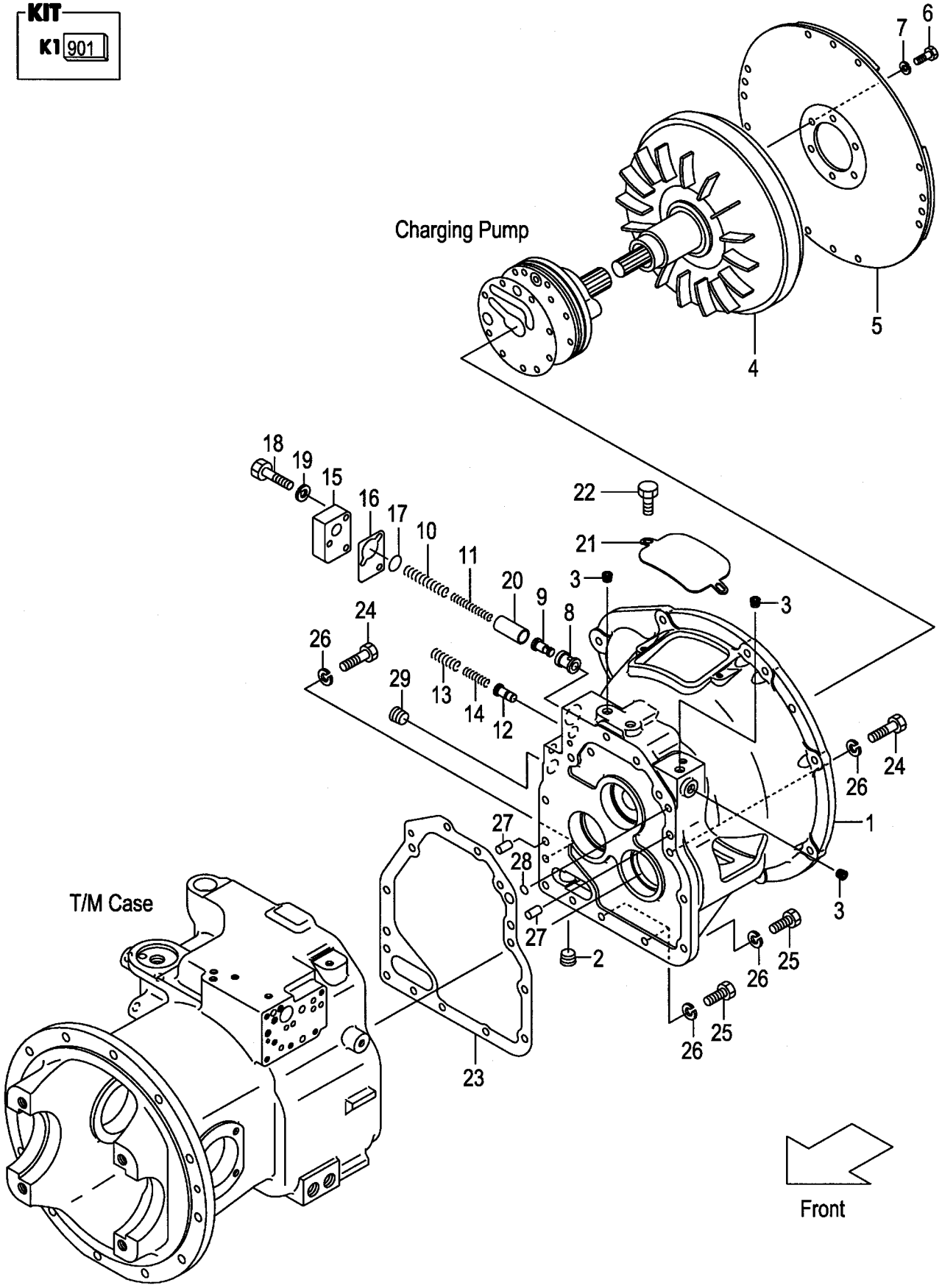

A:FG20T17 FG25T17 C:FD20T17 FD25T17
B:FG20T6 FG25T6 D:FD20T6 FD25T6

Item No	Part No.	Mark	Description		Req'd	Remarks : Serial No.
901	134B3-89821	K1	KIT,REPAIR,D/U	ﾘﾍﾟｱｷｯﾄ	1	INC.23,28 & OTHERS
1	134B3-82001		CASE,TOR-CON	ｹｰｽ	1	
2	27397-52101		PLUG	ﾌﾟﾗｸﾞ	1	
3	116H3-82101		PLUG	ﾌﾟﾗｸﾞ	4	
4	137B3-80201		TORQUE-CONVERTER	ﾄﾙｸｺﾝﾊﾞｰﾀ	1	A,B
-	134G3-80301		TORQUE-CONVERTER	ﾄﾙｸｺﾝﾊﾞｰﾀ	1	C,D
5	137B3-80211		PLATE,INPUT	ﾌﾟﾚｰﾄ	1	A,B
-	13683-82022		PLATE,INPUT	ﾌﾟﾚｰﾄ	1	C,D
6	12163-82621		BOLT	ﾎﾞﾙﾄ	6	
7	02003-20010		WASHER	ﾜｯｼｬ	6	
8	134B3-82281		SLEEVE	ｽﾘｰﾌﾞ	1	
9	134B3-82301		PISTON	ﾋﾟｽﾄﾝ	1	
10	134B3-82021		SPRING	ｽﾌﾟﾘﾝｸﾞ	1	
11	134B3-82031		SPRING	ｽﾌﾟﾘﾝｸﾞ	1	
12	134B3-82011		PISTON	ﾋﾟｽﾄﾝ	1	
13	134B3-82311		SPRING	ｽﾌﾟﾘﾝｸﾞ	1	
14	134B3-82321		SPRING	ｽﾌﾟﾘﾝｸﾞ	1	
15	134B3-82041		COVER	ｶﾊﾞｰ	1	
16	134B3-82051		GASKET	ｶﾞｽｹｯﾄ	1	
17	15583-82541		O-RING	Oﾘﾝｸﾞ	1	
18	01103-08040		BOLT	ﾎﾞﾙﾄ	3	
19	02011-00008		WASHER	ﾜｯｼｬ	3	
20	134B3-82291		COLLAR	ｶﾗｰ	1	
21	131M2-52001		COVER	ｶﾊﾞｰ	1	
22	01185-08020		BOLT	ﾎﾞﾙﾄ	2	
23	134B3-82101	*	GASKET	ｶﾞｽｹｯﾄ	1	
24	01103-10065		BOLT	ﾎﾞﾙﾄ	10	
25	01103-10030		BOLT	ﾎﾞﾙﾄ	3	
26	02011-00010		WASHER	ﾜｯｼｬ	13	
27	02212-12020		PIN,PARALLEL	ﾋﾟﾝ	2	
28	15583-82521	*	O-RING	Oﾘﾝｸﾞ	1	
29	12163-82541		PLUG	ﾌﾟﾗｸﾞ	1	

FIG.82 CHARGING PUMP (TOR-CON)

(F50225C0) ﾁｬｰｼﾞﾝｸﾞﾎﾟﾝﾌﾟ

KIT

K1 901 K2 902

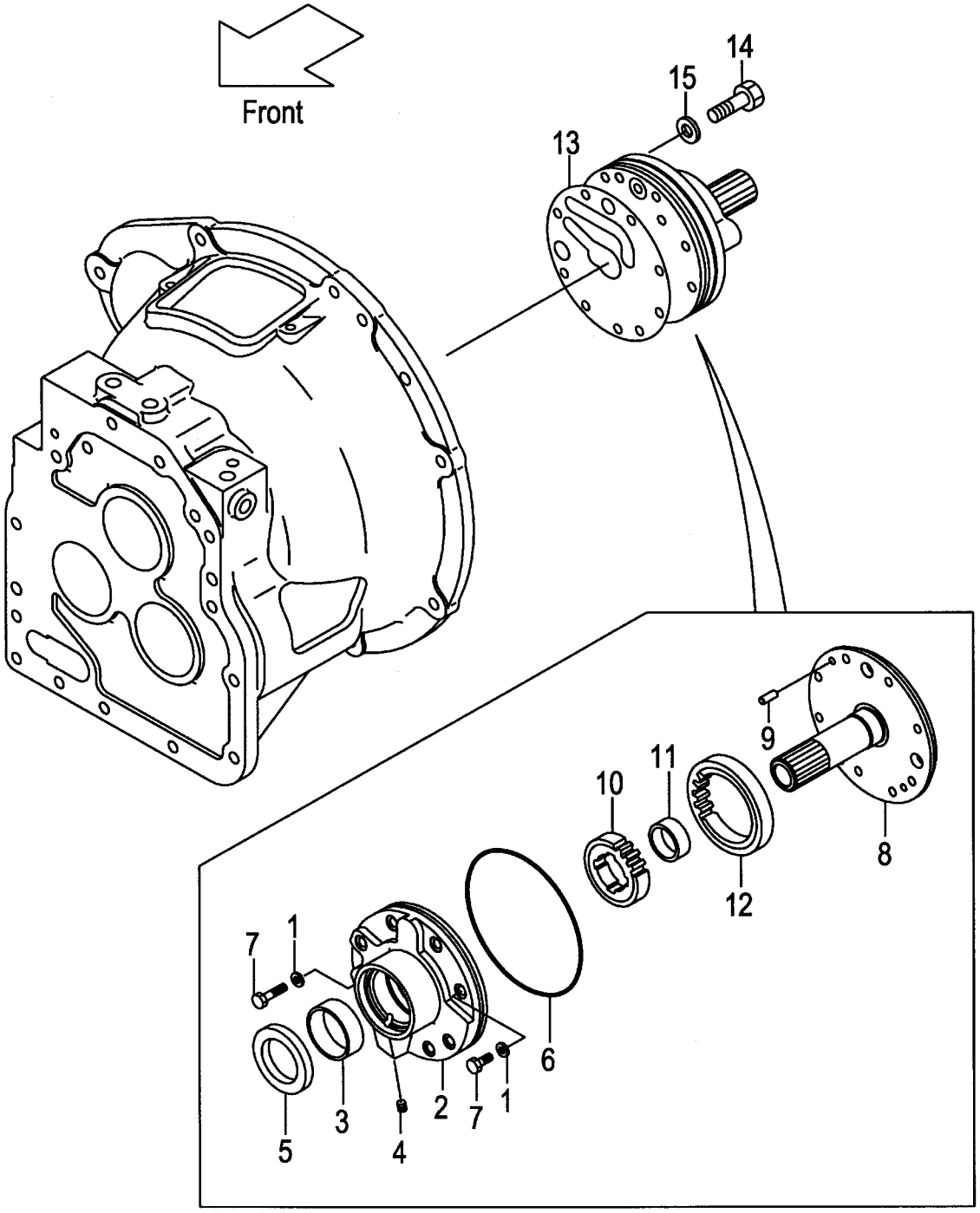

A:FG20T17 FG25T17 C:FD20T17 FD25T17
B:FG20T6 FG25T6 D:FD20T6 FD25T6

Item No	Part No.	Mark	Description		Req'd	Remarks : Serial No.
901	134B3-89861	K1	KIT,REPAIR,PUMP	ﾘﾍﾟｱｷｯﾄ	1	INC.1,5,6,13,15
A1	134G3-80401		PUMP-ASSY,CHARGING	ﾁｬｰｼﾞﾝｸﾞﾎﾟﾝﾌﾟｱｯｾﾝ	1	INC.1-12
902	134G3-89851	K2	KIT,BODY,PUMP	ﾎﾞﾃﾞｨｰｷｯﾄ	1	INC.2,8,10-12
1	12163-82561	*	PACKING	ﾊﾟｯｷﾝｸﾞ	2	
A2	15583-82141		CASE-ASSY,PUMP	ﾎﾟﾝﾌﾟｹｰｽｱｯｾﾝ	1	INC.2-4
2	NO PART NO.	#*	CASE,PUMP	ｹｰｽ	1	
3	15583-82161		BUSHING	ﾌﾞｯｼﾝｸﾞ	1	
4	23870-52821		PLUG	ﾌﾟﾗｸﾞ	1	
5	15583-82172	*	SEAL,OIL	ｼｰﾙ	1	
6	15583-82181	*	O-RING	Oﾘﾝｸﾞ	1	
7	01103-08035		BOLT	ﾎﾞﾙﾄ	2	
8	134G3-82001	*	SUPPORT,STARTER	ｻﾎﾟｰﾄ	1	
9	02212-06016		PIN,PARALLEL	ﾋﾟﾝ	2	
A3	15583-82211		GEAR-ASSY	ｷﾞﾔｰｱｯｾﾝ	1	INC.10-12
10	NO PART NO.	#*	GEAR,DRIVE	ｷﾞﾔｰ	1	
11	15583-82241	*	BUSHING	ﾌﾞｯｼﾝｸﾞ	1	
12	NO PART NO.	#*	GEAR,DRIVEN	ｷﾞﾔｰ	1	
13	134B3-82091	*	GASKET	ｶﾞｽｹｯﾄ	1	
14	01103-08045		BOLT	ﾎﾞﾙﾄ	6	
15	12163-82561	*	PACKING	ﾊﾟｯｷﾝｸﾞ	6	

FIG.83 MISSION CASE (TOR-CON)

(F50225D0) ミッションケース

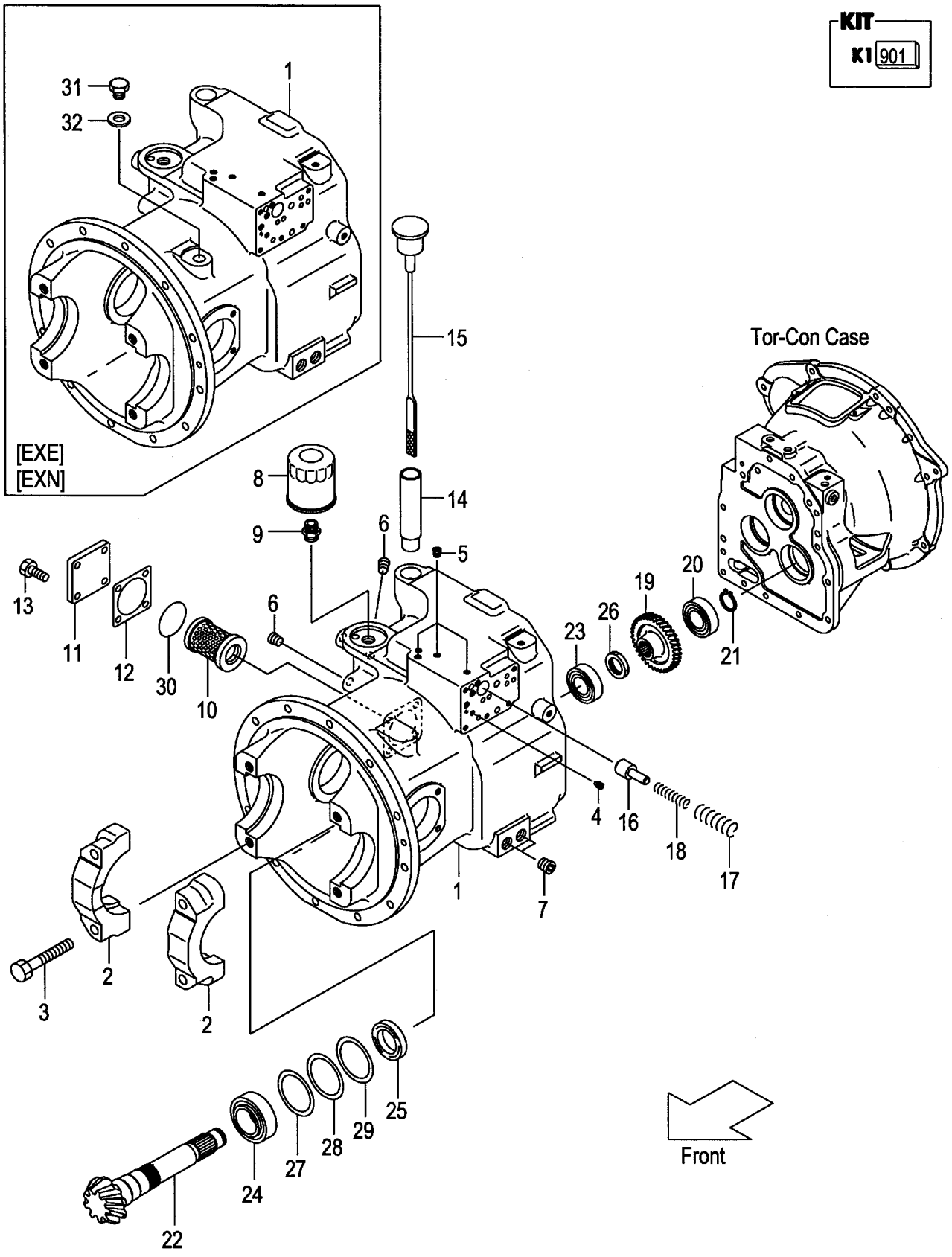

A:FG20T17 FG25T17 C:FD20T17 FD25T17
B:FG20T6 FG25T6 D:FD20T6 FD25T6

Item No	Part No.	Mark	Description		Req'd	Remarks : Serial No.
901	134B3-89821	K1	KIT,REPAIR,D/U	ﾘﾍﾟｱｷｯﾄ	1	INC.12,21,25-29& OTHERS
A1	134B3-80281		CASE-ASSY,T/M	ﾄﾗﾝｽﾐｯｼｮﾝｹｰｽｱｯｾﾝ	1	INC.1,2
-	534B3-80281		CASE-ASSY,T/M	ﾄﾗﾝｽﾐｯｼｮﾝｹｰｽｱｯｾﾝ	1	B,D [EXE][EXN] INC.1,2
1	NO PART NO.	#	CASE,T/M	ｹｰｽ	1	
-	NO PART NO.	#	CASE,T/M	ｹｰｽ	1	B,D [EXE][EXN]
2	NO PART NO.	#	CAP,BRG	ｷｬｯﾌﾟ	2	
3	134A3-42221		BOLT	ﾎﾞﾙﾄ	4	
4	115G3-82671		PLUG,CHOKE	ﾌﾟﾗｸﾞ	1	
5	116H3-82201		PLUG	ﾌﾟﾗｸﾞ	4	
6	116H3-82101		PLUG	ﾌﾟﾗｸﾞ	2	
7	12163-82541		PLUG	ﾌﾟﾗｸﾞ	2	
8	115G3-82241		FILTER,OIL	ﾌｨﾙﾀ	1	
9	115G3-82251		NIPPLE	ﾆｯﾌﾟﾙ	1	
10	124U3-82521		STRAINER,SUCTION	ｽﾄﾚｰﾅ	1	
11	124U3-82081		COVER,PLATE	ｶﾊﾞｰ	1	
12	124U3-82091	*	GASKET	ｶﾞｽｹｯﾄ	1	
13	01184-10025		BOLT	ﾎﾞﾙﾄ	4	
14	12163-82221		PIPE,OIL-FILL	ﾊﾟｲﾌﾟ	1	
15	12163-82232		CAP,OIL-FILL	ｷｬｯﾌﾟ	1	
16	15583-82441		SPOOL,ACC	ｽﾌﾟｰﾙ	1	
17	15583-82451		SPRING	ｽﾌﾟﾘﾝｸﾞ	1	
18	15583-82461		SPRING	ｽﾌﾟﾘﾝｸﾞ	1	
19	115G3-82451		GEAR,OUTPUT	ｷﾞﾔｰ	1	
-	134B3-82381		GEAR,OUTPUT	ｷﾞﾔｰ	1	B,D [EXK]
20	03000-06306		BRG,BALL	ﾍﾞｱﾘﾝｸﾞ	1	
21	02100-00030	*	RING,SNAP	ｽﾅｯﾌﾟﾘﾝｸﾞ	1	
22	120T3-82001		SHAFT,OUTPUT	ｼｬﾌﾄ	1	A,C
-	134B3-82141		SHAFT,OUTPUT	ｼｬﾌﾄ	1	B,D
23	12003-43031		BRG,TAPER-ROLLER	ﾍﾞｱﾘﾝｸﾞ	1	
24	115G3-82641		BRG,TAPER-ROLLER	ﾍﾞｱﾘﾝｸﾞ	1	
25	115G3-82651	*	SEAL,OIL	ｼｰﾙ	1	
26	115G3-82471	*	NUT	ﾅｯﾄ	1	
27	12003-42311	*	SHIM,T-0.5	ｼﾑ	1	
28	12003-42321	*	SHIM,T-0.2	ｼﾑ	2	
29	12003-42331	*	SHIM,T-0.1	ｼﾑ	1	
30	115G3-82111		O-RING	Oﾘﾝｸﾞ	1	
31	124T3-42651		BOLT	ﾎﾞﾙﾄ	1	B,D [EXE][EXN]
32	124T3-42661		WASHER	ﾜｯｼｬ	1	B,D [EXE][EXN]

FIG.84 CLUTCH PACK (TOR-CON)

(F50225E0) クラッチパック

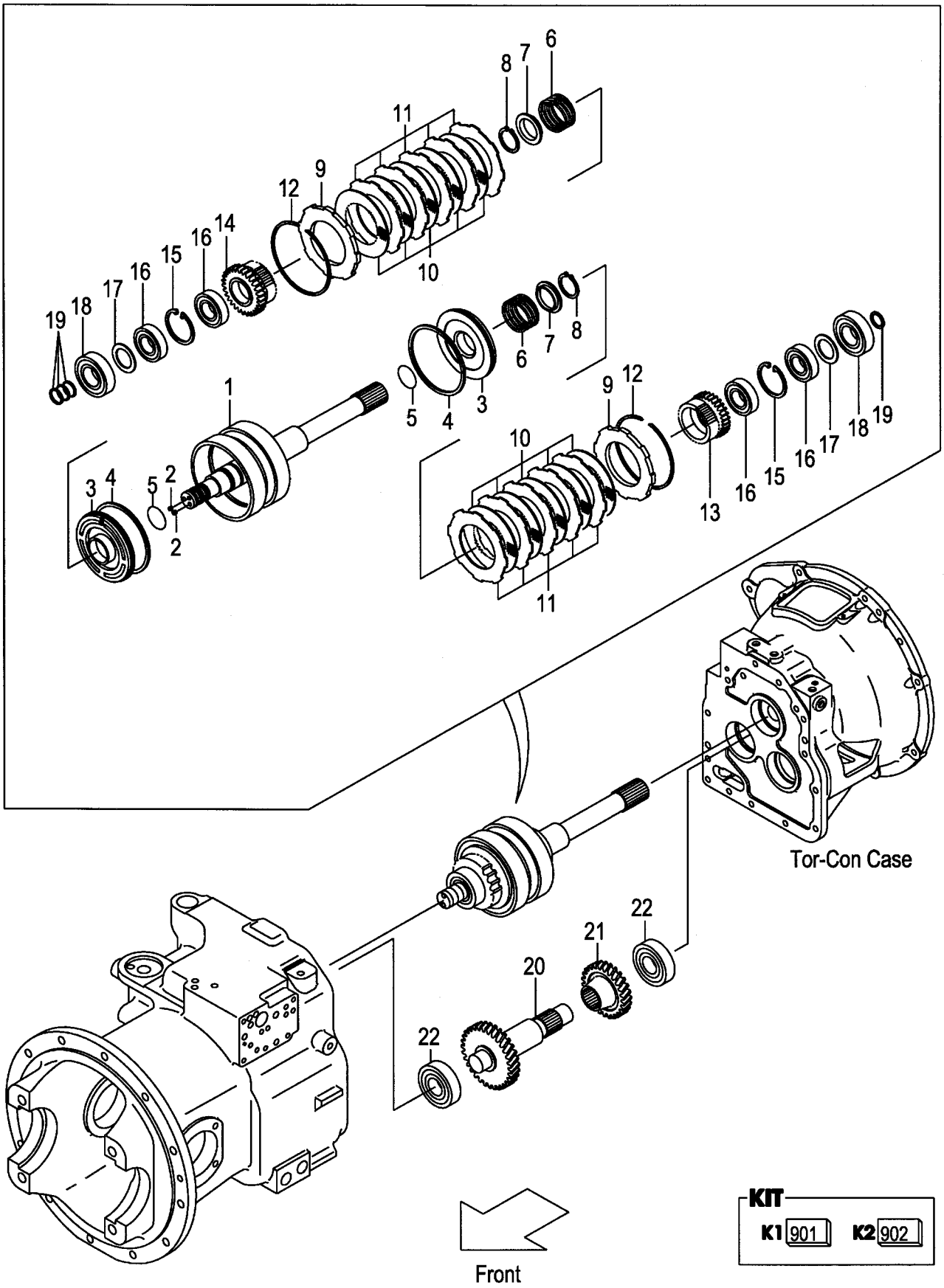

A:FG20T17 FG25T17 C:FG20T6 FG25T6
B:FD20T17 FD25T17 D:FD20T6 FD25T6

Item No	Part No.	Mark	Description		Req'd	Remarks : Serial No.
A1	134G3-80201		CLUTCH-ASSY,HYDRO	ｸﾗｯﾁｱｯｾﾝ	1	INC.1-19
-	132G3-80201		CLUTCH-ASSY,HYDRO	ｸﾗｯﾁｱｯｾﾝ	1	B,D
						[EXK] INC.1-19
901	134G3-89811	K1	KIT,REPAIR,CLUTCH	ﾘﾍﾟｱｷｯﾄ	1	INC.4,5,7,8,12,19
A2	134G3-80251		SUB-ASSY,HYD-CLUTCH	ｸﾗｯﾁｻﾌﾞｱｯｾﾝ	1	INC.1-12
902	134G3-89831	K2	KIT,REPAIR,DISK	ﾘﾍﾟｱｷｯﾄ	1	INC.10,11
1	134G3-82101		SHAFT,INPUT	ｼｬﾌﾄ	1	INC.2
2	01066-08008		PLUG	ﾌﾟﾗｸﾞ	2	
3	134G3-82111		PISTON	ﾋﾟｽﾄﾝ	2	
4	134G3-82141	*	RING,SEAL	ﾘﾝｸﾞ	2	
5	11243-82211	*	O-RING	Oﾘﾝｸﾞ	2	
6	11243-82081		SPRING,RETURN,CLUTCH	ｽﾌﾟﾘﾝｸﾞ	2	
7	11243-82091	*	SHEET,SPRING	ｼｰﾄ	2	
8	02100-00040	*	RING,SNAP	ｽﾅｯﾌﾟﾘﾝｸﾞ	2	
9	134G3-82131		END,CLUTCH	ｴﾝﾄﾞ	2	
10	134B3-82401	*	PLATE,FRICTION	ﾌﾟﾚｰﾄ	10	
11	134G3-82121	*	PLATE,MATING	ﾌﾟﾚｰﾄ	10	
12	11243-82181	*	RING,SNAP	ｽﾅｯﾌﾟﾘﾝｸﾞ	2	
13	115G3-82331		GEAR,FORWARD	ｷﾞﾔｰ	1	
-	134B3-82361		GEAR,FORWARD	ｷﾞﾔｰ	1	B,D
						[EXK]
14	115G3-82341		GEAR,REVERSE	ｷﾞﾔｰ	1	
15	02121-00058		RING,SNAP	ｽﾅｯﾌﾟﾘﾝｸﾞ	2	
16	115G3-82351		BRG,BALL	ﾍﾞｱﾘﾝｸﾞ	4	
17	115G3-82361		PLATE,THRUST	ﾌﾟﾚｰﾄ	2	
18	03000-06306		BRG,BALL	ﾍﾞｱﾘﾝｸﾞ	2	
19	11243-82161	*	RING,SEAL	ﾘﾝｸﾞ	4	
20	115G3-82401		SHAFT,IDLER	ｼｬﾌﾄ	1	
21	115G3-82411		GEAR,IDLER	ｷﾞﾔｰ	1	
-	134B3-82371		GEAR,IDLER	ｷﾞﾔｰ	1	B,D
						[EXK]
22	03000-06306		BRG,BALL	ﾍﾞｱﾘﾝｸﾞ	2	

FIG.85 CONTROL VALVE (TOR-CON)

(F50225F0) コントロールバルブ

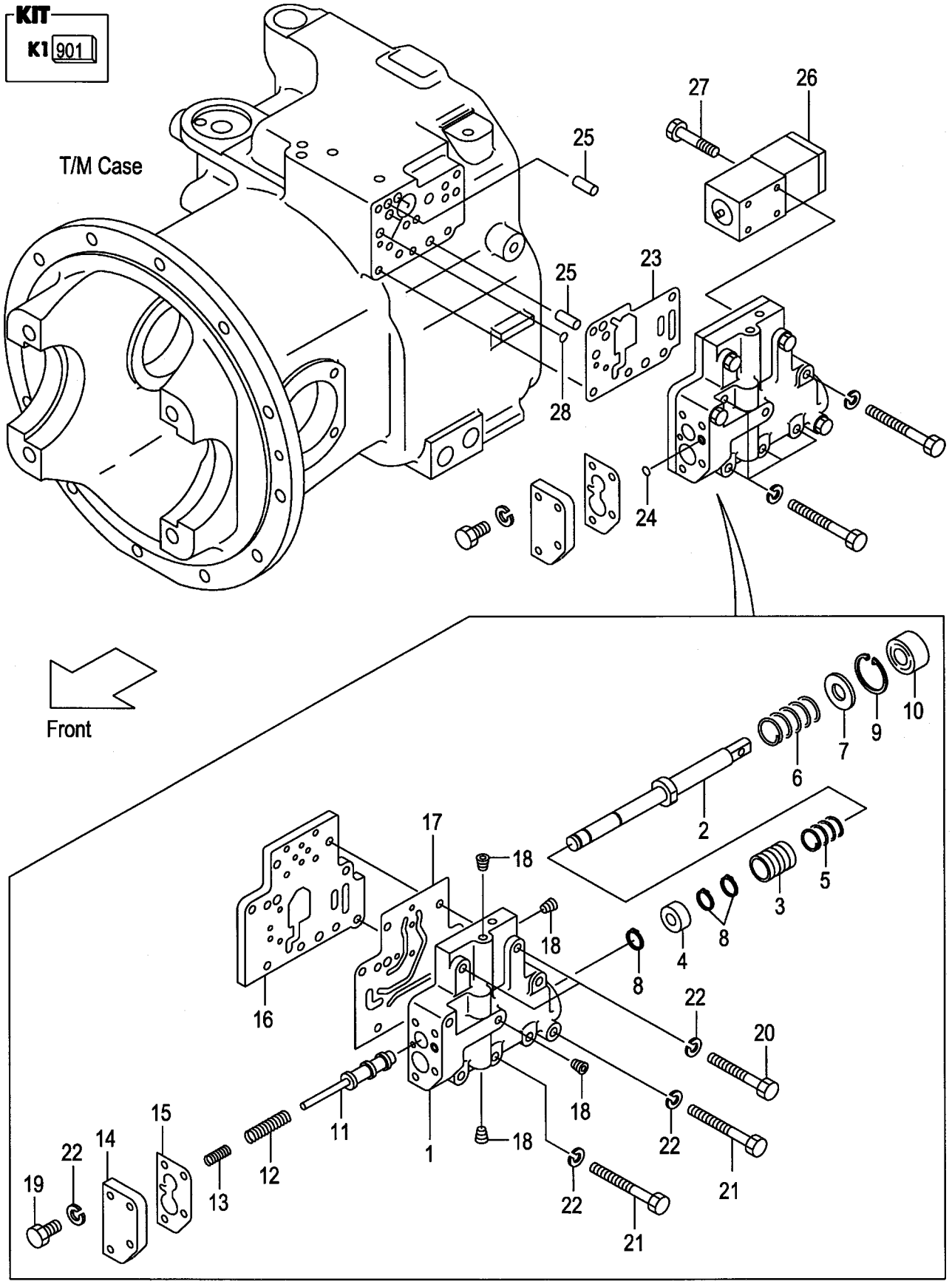

A:FG20T17 FG25T17:1-11016 C:FD20T17 FD25T17:1-11000
B:FG20T6 FG25T6:1-65159 D:FD20T6 FD25T6:1-83386

Item No	Part No.	Mark	Description		Req'd	Remarks : Serial No.
A1	534B8-30201		VALVE-ASSY,CONTROL	ｺﾝﾄﾛｰﾙﾊﾞﾙﾌﾞｱｯｾﾝ	1	INC.1-22
901	534B8-39811	K1	KIT,BODY,VALVE	ﾎﾞﾃﾞｨｰｷｯﾄ	1	INC.1-4
1	NO PART NO.	#*	BODY,VALVE	ﾎﾞﾃﾞｨ	1	
2	115G3-82512	*	SPOOL,INCHING	ｽﾌﾟｰﾙ	1	
3	15793-82321	*	PLUNGER	ﾌﾟﾗﾝｼﾞｬ	1	
4	115G3-82522	*	PISTON	ﾋﾟｽﾄﾝ	1	
5	15793-82341		SPRING	ｽﾌﾟﾘﾝｸﾞ	1	
6	115G3-82491		SPRING	ｽﾌﾟﾘﾝｸﾞ	1	
7	15943-82651		SPACER	ｽﾍﾟｰｻ	1	
8	02100-00012		RING,SNAP	ｽﾅｯﾌﾟﾘﾝｸﾞ	3	
9	02110-00030		RING,SNAP	ｽﾅｯﾌﾟﾘﾝｸﾞ	1	
10	15943-82661		SEAL,OIL	ｼｰﾙ	1	
11	15943-82731		SPOOL,MODULATE	ｽﾌﾟｰﾙ	1	
12	15943-82741		SPRING	ｽﾌﾟﾘﾝｸﾞ	1	
13	15943-82751		SPRING	ｽﾌﾟﾘﾝｸﾞ	1	
14	534B8-32011		PLATE,VALVE,A	ﾌﾟﾚｰﾄ	1	
15	534B8-32031		GASKET,A	ｶﾞｽｹｯﾄ	1	
16	534B8-32021		PLATE,VALVE,B	ﾌﾟﾚｰﾄ	1	
17	534B8-32041		GASKET,B	ｶﾞｽｹｯﾄ	1	
18	116H3-82201		PLUG	ﾌﾟﾗｸﾞ	4	
19	01103-08025		BOLT	ﾎﾞﾙﾄ	4	
20	01103-08045		BOLT	ﾎﾞﾙﾄ	2	
21	01103-08060		BOLT	ﾎﾞﾙﾄ	7	
22	02011-00008		WASHER	ﾜｯｼｬ	13	
23	534B8-32051		GASKET,C	ｶﾞｽｹｯﾄ	1	
24	15583-82571		O-RING	Oﾘﾝｸﾞ	1	
25	02212-10025		PIN,PARALLEL	ﾋﾟﾝ	2	
26	135L3-82001		VALVE,SOLENOID	ﾊﾞﾙﾌﾞ	1	
27	01170-05045		BOLT	ﾎﾞﾙﾄ	4	
28	15583-82571		O-RING	Oﾘﾝｸﾞ	3	

FIG.85A CONTROL VALVE (TOR-CON)

(F50225F1) コントロールバルブ

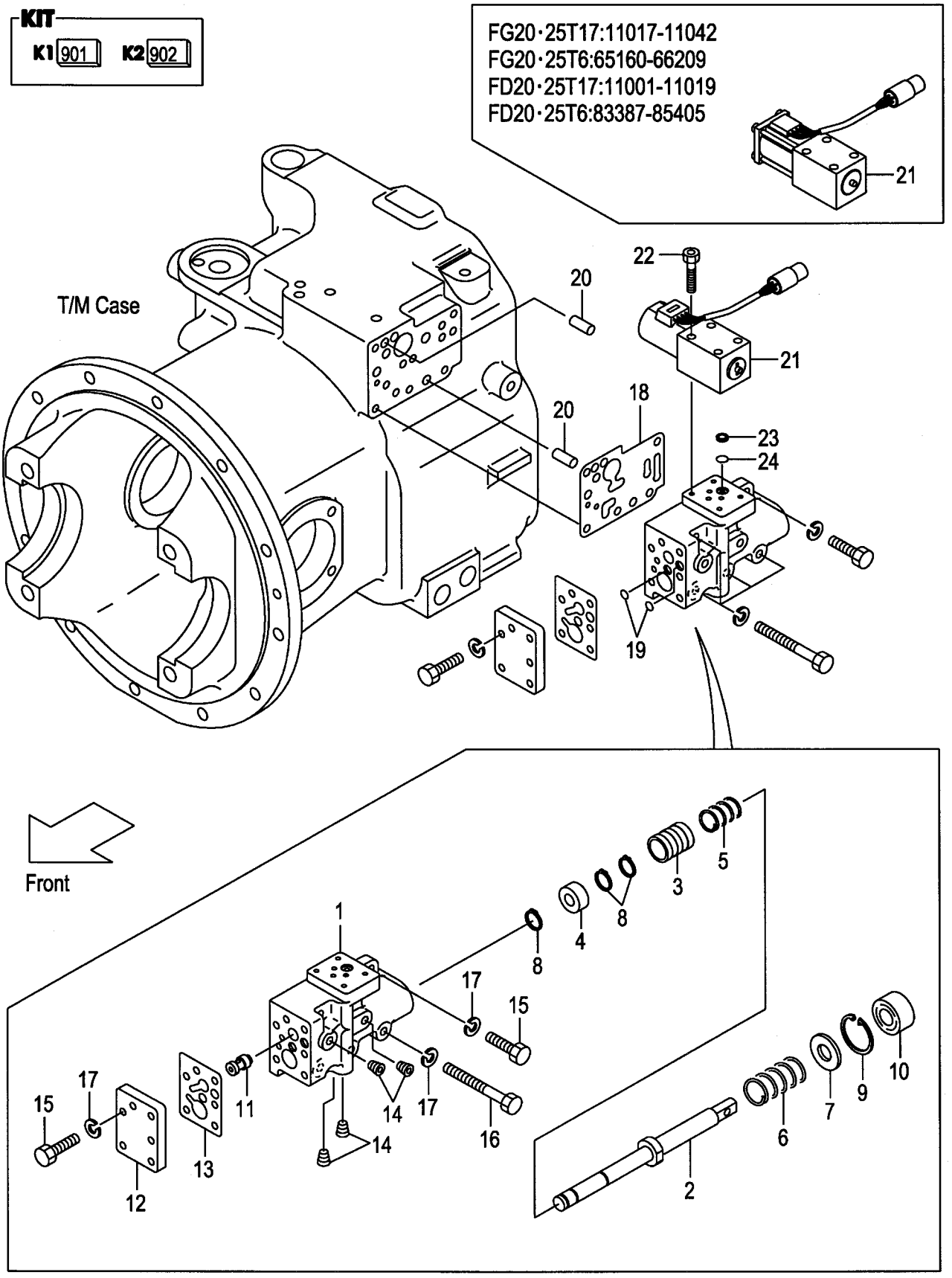

A:FG20T17 FG25T17:11017- C:FD20T17 FD25T17:11001-
B:FG20T6 FG25T6:65160- D:FD20T6 FD25T6:83387-

Item No	Part No.	Mark	Description		Req'd	Remarks : Serial No.
901	139B3-89801	K1	KIT,REPAIR,VALVE	ﾘﾍﾟｱｷｯﾄ	1	INC.8-10,13,18,19,23,24
A1	139B3-80201		VALVE-ASSY,CONTROL	ｺﾝﾄﾛｰﾙﾊﾞﾙﾌﾞｱｯｾﾝ	1	INC.1-17
902	139B3-89811	K2	KIT,BODY,VALVE	ﾎﾞﾃﾞｨｰｷｯﾄ	1	INC.1-4,11
1	NO PART NO.	#*	BODY,VALVE	ﾎﾞﾃﾞｨ	1	
2	115G3-82512	*	SPOOL,INCHING	ｽﾌﾟｰﾙ	1	
3	15793-82321	*	PLUNGER	ﾌﾟﾗﾝｼﾞｬ	1	
4	115G3-82522	*	PISTON	ﾋﾟｽﾄﾝ	1	
5	15793-82341		SPRING	ｽﾌﾟﾘﾝｸﾞ	1	
6	115G3-82491		SPRING	ｽﾌﾟﾘﾝｸﾞ	1	
7	15943-82651		SPACER	ｽﾍﾟｰｻ	1	
8	02100-00012	*	RING,SNAP	ｽﾅｯﾌﾟﾘﾝｸﾞ	3	
9	02110-00030	*	RING,SNAP	ｽﾅｯﾌﾟﾘﾝｸﾞ	1	
10	15943-82661	*	SEAL,OIL	ｼｰﾙ	1	
11	139B3-82121	*	SPOOL	ｽﾌﾟｰﾙ	1	
12	139B3-82111		COVER,VALVE	ｶﾊﾞｰ	1	
13	139B3-82131	*	GASKET,COVER	ｶﾞｽｹｯﾄ	1	
14	116H3-82201		PLUG	ﾌﾟﾗｸﾞ	4	
15	01103-08025		BOLT	ﾎﾞﾙﾄ	7	
16	01103-08060		BOLT	ﾎﾞﾙﾄ	4	
17	02011-00008		WASHER	ﾜｯｼｬ	11	
18	139B3-82141	*	GASKET	ｶﾞｽｹｯﾄ	1	
19	15583-82571	*	O-RING	Oﾘﾝｸﾞ	2	
20	02212-10025		PIN,PARALLEL	ﾋﾟﾝ	2	
21	135L3-82001		VALVE,SOLENOID	ﾊﾞﾙﾌﾞ	1	A:11017-11042 B:65160-66209 C:11001-11019 D:83387-85405
-	135L3-82002		VALVE,SOLENOID	ﾊﾞﾙﾌﾞ	1	A:11043- B:66210- C:11020- D:85406-
22	01170-05045		BOLT	ﾎﾞﾙﾄ	4	
23	139B3-82161	*	FILTER,COIN	ﾌｨﾙﾀ	1	
24	139B3-82151	*	O-RING	Oﾘﾝｸﾞ	1	

FIG.86 REDUCTION

(F50225G0) ﾘﾀﾞｸｼｮﾝ

KIT
K1 901

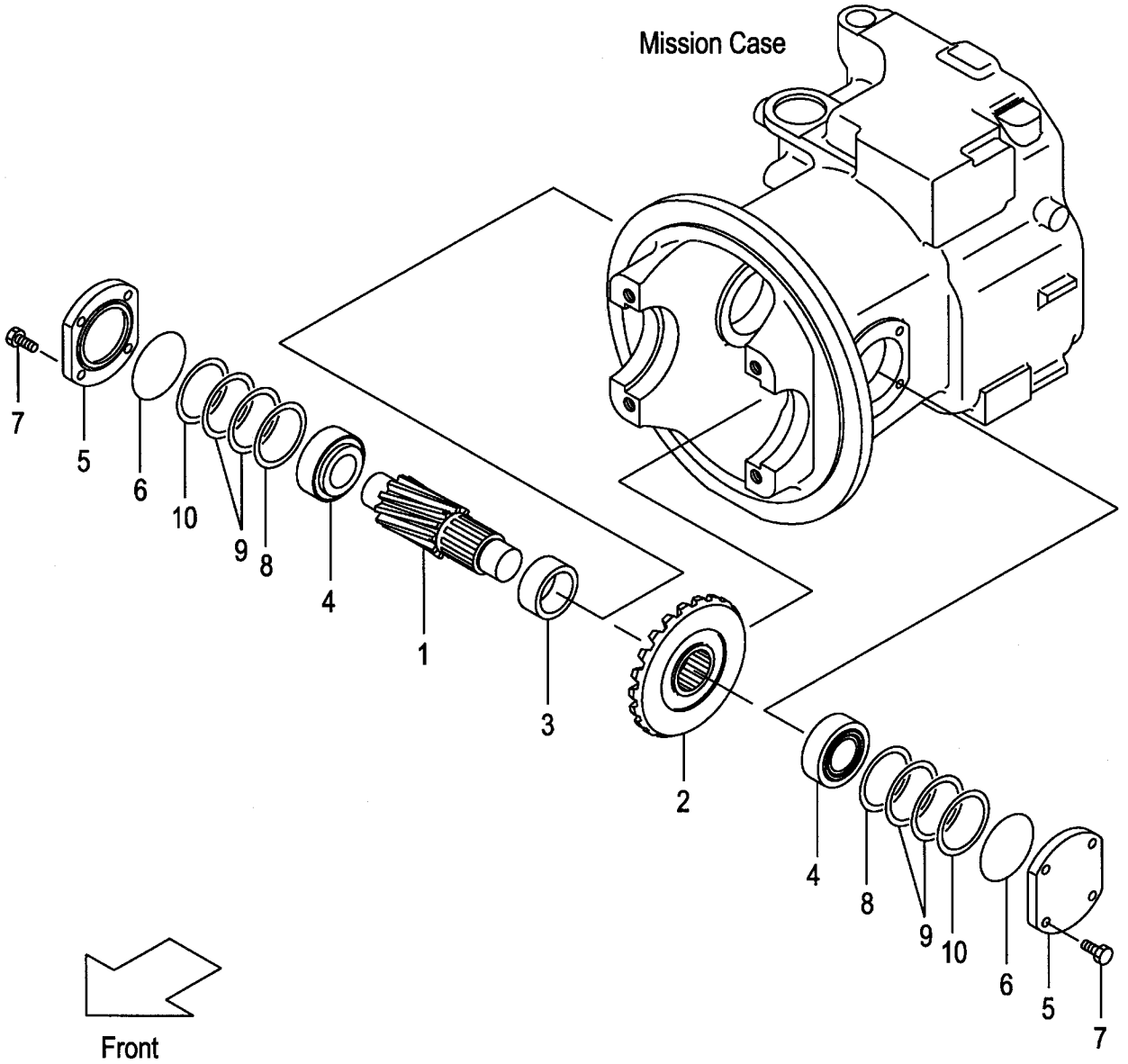

A:FG20C17 FG25C17 D:FG20T6 FG25T6 G:FD20T17 FD25T17 K:FD20W6 FD25W6
B:FG20T17 FG25T17 E:FG20W6 FG25W6 H:FD20C6 FD25C6
C:FG20C6 FG25C6 F:FD20C17 FD25C17 J:FD20T6 FD25T6

FIG.86
(F50225G0)

Item No	Part No.	Mark	Description		Req'd	Remarks : Serial No.
901	134A3-48911	K1	KIT,REPAIR,T/M	ﾘﾍﾟｱｷｯﾄ	1	A,C,F,H
						INC.6,8-10 & OTHERS
1	134A3-22001		SHAFT,FINAL-PINION	ｼｬﾌﾄ	1	
2	120S3-22011		GEAR,SPIRAL-BEVEL	ｷﾞﾔｰ	1	A,B,F,G
-	134A3-22011		GEAR,SPIRAL-BEVEL	ｷﾞﾔｰ	1	C,D,E,H,J,K
3	134A3-22021		SPACER	ｽﾍﾟｰｻ	1	
4	134A3-22031		BRG,TAPER-ROLLER	ﾍﾞｱﾘﾝｸﾞ	2	
5	134A3-22041		COVER,BRG	ｶﾊﾞｰ	2	
6	03310-00800	*	O-RING	Oﾘﾝｸﾞ	2	
7	01184-10025		BOLT	ﾎﾞﾙﾄ	8	
8	12003-42311	*	SHIM,T-0.5	ｼﾑ	2	
9	12003-42321	*	SHIM,T-0.2	ｼﾑ	4	
10	12003-42331	*	SHIM,T-0.1	ｼﾑ	2	

FIG.87 DIFFERENTIAL

(F50225H0) ﾃﾞｨﾌｧﾚﾝｼｬﾙ

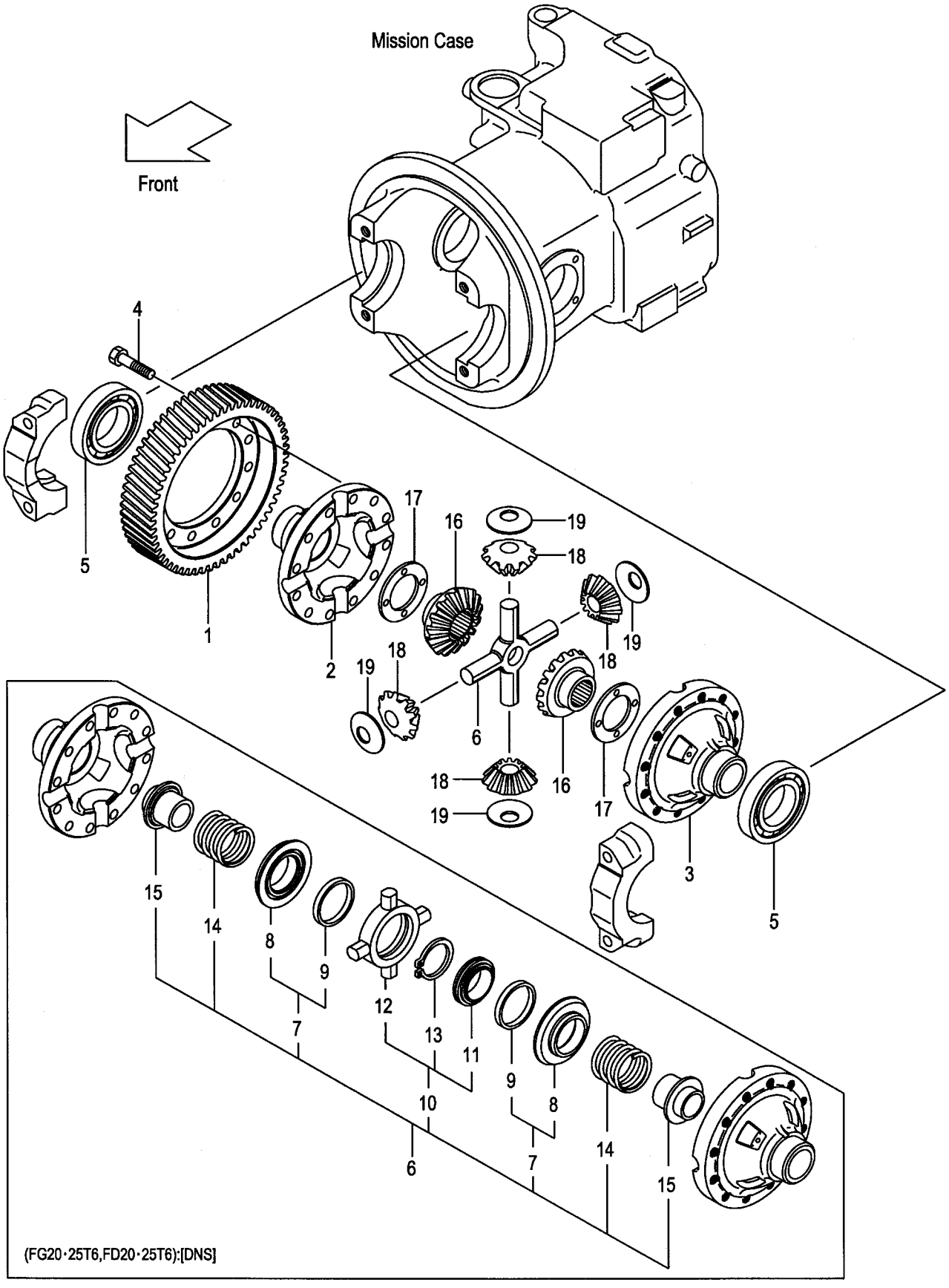

A:FG20C17 FG25C17 D:FG20T6 FG25T6 G:FD20T17 FD25T17 K:FD20W6 FD25W6
B:FG20T17 FG25T17 E:FG20W6 FG25W6 H:FD20C6 FD25C6
C:FG20C6 FG25C6 F:FD20C17 FD25C17 J:FD20T6 FD25T6

FIG.87
(F50225H0)

Item No	Part No.	Mark	Description		Req'd	Remarks : Serial No.
1	134A3-52001		GEAR,RING	ｷﾞﾔｰ	1	
A1	134A3-59801		CASE-ASSY,CROSS	ｸﾛｽｹｰｽｱｯｾﾝ	1	INC.2,3
2	NO PART NO.	#	CASE,CROSS,RH	ｹｰｽ	1	
3	NO PART NO.	#	CASE,CROSS,LH	ｹｰｽ	1	
4	134A3-52061		BOLT	ﾎﾞﾙﾄ	12	
5	03000-06213		BRG,BALL	ﾍﾞｱﾘﾝｸﾞ	2	
6	124G3-52011		SPIDER	ｽﾊﾟｲﾀﾞ	1	
-	79562-61202		NOSPIN	ﾉｰｽﾋﾟﾝ	1	D,J
						[DNS] INC.7-15
7	NO PART NO.	#	CLUTCH,DRIVEN	ｸﾗｯﾁ	2	D,J
						[DNS] INC.8,9
8	NO PART NO.	#	CLUTCH,DRIVEN	ｸﾗｯﾁ	2	D,J
						[DNS]
9	NO PART NO.	#	RING,HOLDOUT	ﾘﾝｸﾞ	2	D,J
						[DNS]
10	78658-42012		SPIDER	ｽﾊﾟｲﾀﾞ	1	D,J
						[DNS] INC.11-13
11	NO PART NO.	#	CAM,CENTER	ｶﾑ	1	D,J
						[DNS]
12	NO PART NO.	#	SPIDER	ｽﾊﾟｲﾀﾞ	1	D,J
						[DNS]
13	NO PART NO.	#	RING,SNAP	ｽﾅｯﾌﾟﾘﾝｸﾞ	1	D,J
						[DNS]
14	78470-98028		SPRING	ｽﾌﾟﾘﾝｸﾞ	2	D,J
						[DNS]
15	79562-61203		GEAR,SIDE	ｷﾞﾔｰ	2	D,J
						[DNS]
16	134A3-52041		GEAR,SIDE	ｷﾞﾔｰ	2	(WITHOUT DNS)
17	16113-52141		WASHER,THRUST,T-2.36	ﾜｯｼｬ	2	(WITHOUT DNS)
-	14453-52071		WASHER,THRUST,T-2.2	ﾜｯｼｬ	(2)	(WITHOUT DNS)
-	14453-52081		WASHER,THRUST,T-2.5	ﾜｯｼｬ	(2)	(WITHOUT DNS)
18	134A3-52051		GEAR,PINION	ｷﾞﾔｰ	4	(WITHOUT DNS)
19	16113-52121		WASHER,THRUST	ﾜｯｼｬ	4	(WITHOUT DNS)

FIG.88 DRIVE AXLE

(F5023010) ﾄﾞﾗｲﾌﾞｱｸｽﾙ

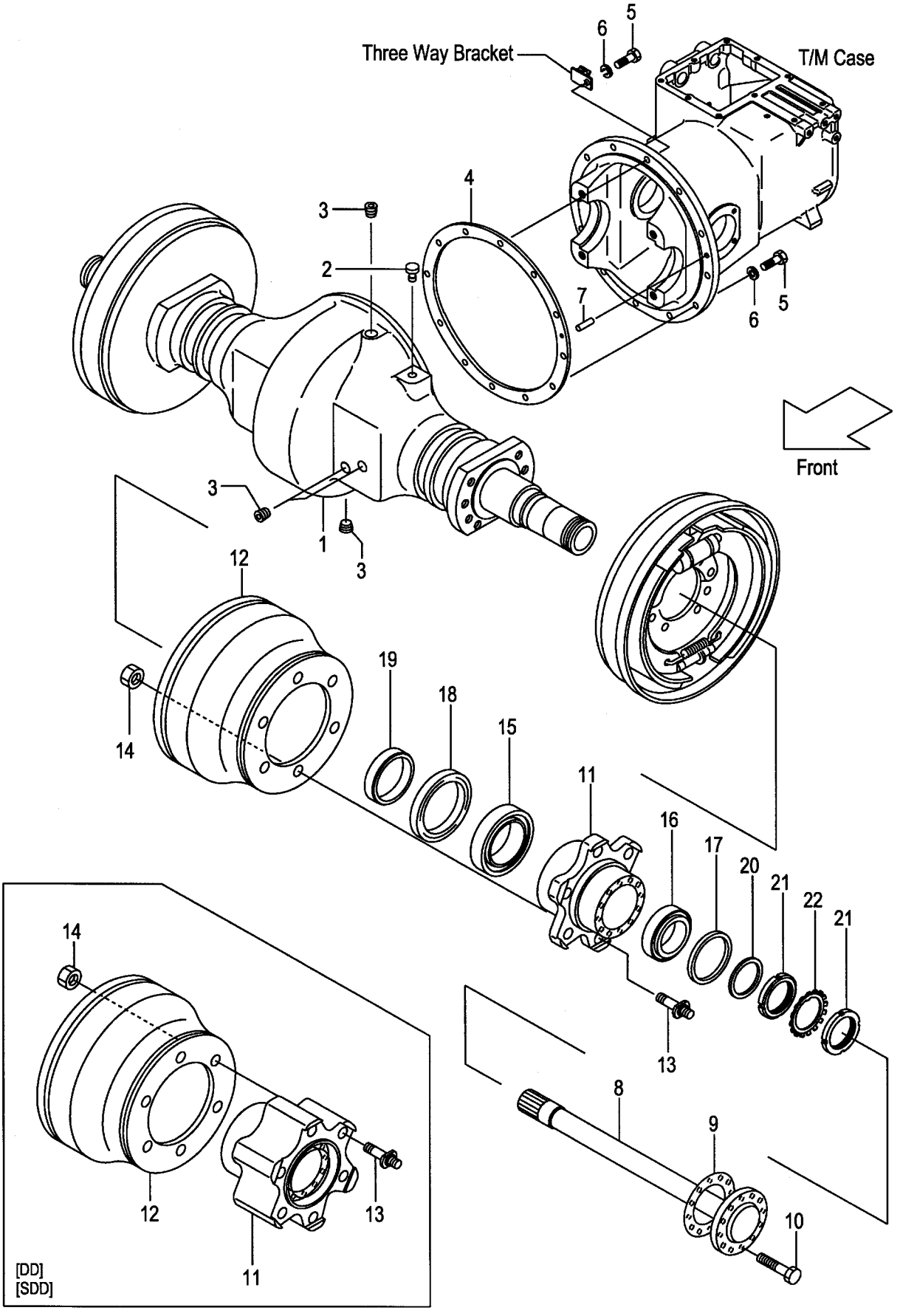

A:FG20C17 FG20T17 FG25C17 FG25T17:1-11000 C:FD20C17 FD20T17 FD25C17 FD25T17:1-11006 (F5023010)
B:FG20C6 FG20T6 FG25C6 FG25T6 FG20W6 FG25W6:1-65122 D:FD20C6 FD20T6 FD25C6 FD25T6 FD20W6 FD25W6:1-83241

Item No	Part No.	Mark	Description		Req'd	Remarks : Serial No.
1	214A3-00301		HOUSING,AXLE	ﾊｳｼﾞﾝｸﾞ	1	
-	534A7-52011		HOUSING,AXLE	ﾊｳｼﾞﾝｸﾞ	1	[SM][SAS]
2	15573-42151		BREATHER,AIR	ﾌﾞﾘｰｻﾞ	1	
3	22193-03001		PLUG	ﾌﾟﾗｸﾞ	4	
4	24452-52002		PACKING	ﾊﾟｯｷﾝｸﾞ	1	
5	01106-12040		BOLT	ﾎﾞﾙﾄ	12	
6	02011-00012		WASHER	ﾜｯｼｬ	12	
7	02212-10020		PIN,PARALLEL	ﾋﾟﾝ	1	
8	214A3-02011		SHAFT,DRIVE	ｼｬﾌﾄ	2	
9	24453-02102		PACKING	ﾊﾟｯｷﾝｸﾞ	2	
10	24453-02061		BOLT,REAMER	ﾎﾞﾙﾄ	24	
11	214A3-02021		HUB,FRONT	ﾊﾌﾞ	2	
-	514A7-42002		HUB,FRONT	ﾊﾌﾞ	2	[DD][SDD]
12	22673-02031		DRUM,BRAKE	ﾄﾞﾗﾑ	2	
-	53657-42081		DRUM,BRAKE	ﾄﾞﾗﾑ	2	[DD][SDD]
13	24353-72001		BOLT,HUB	ﾎﾞﾙﾄ	12	
-	53657-42091		BOLT,HUB	ﾎﾞﾙﾄ	12	[DD][SDD]
14	01400-10020		NUT	ﾅｯﾄ	12	
15	03071-30214		BRG,TAPER-ROLLER	ﾍﾞｱﾘﾝｸﾞ	2	
16	23453-02071		BRG,TAPER-ROLLER	ﾍﾞｱﾘﾝｸﾞ	2	INC.17
17	23453-02131		SEAL,OIL	ｼｰﾙ	2	
18	23653-02001		SEAL,OIL	ｼｰﾙ	2	
19	24453-02121		RETAINER	ﾘﾃｰﾅ	2	
20	23453-02091		WASHER	ﾜｯｼｬ	2	
21	03192-00012		NUT,BRG	ﾅｯﾄ	4	
22	03192-10012		WASHER,BRG	ﾜｯｼｬ	2	

FIG.88A DRIVE AXLE

(F5023011) ﾄﾞﾗｲﾌﾞｱｸｽﾙ

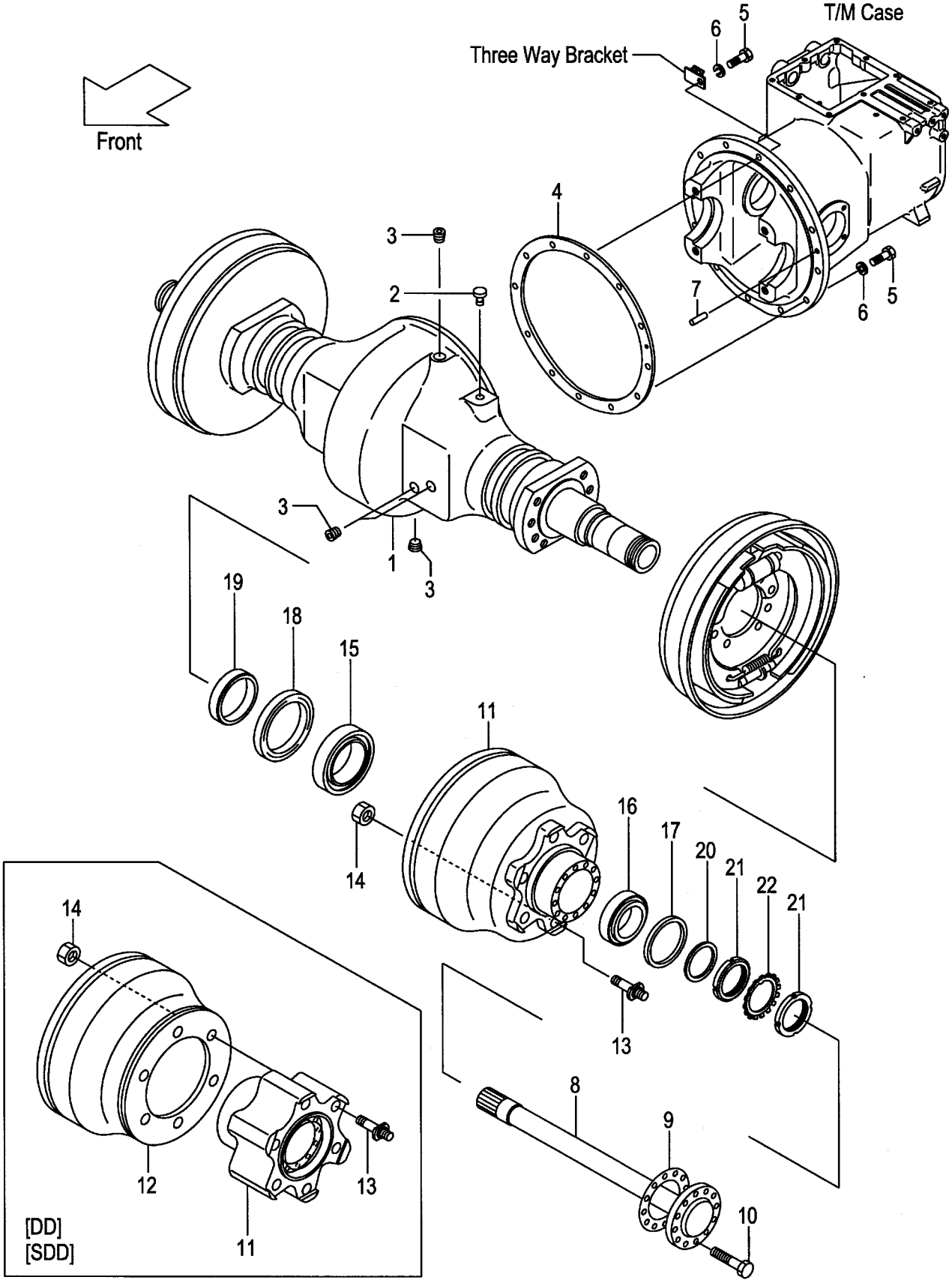

A:FG20C17 FG20T17 FG25C17 FG25T17:11001- C:FD20C17 FD20T17 FD25C17 FD25T17:11007-
B:FG20C6 FG20T6 FG25C6 FG25T6 FG20W6 FG25W6:65123- D:FD20C6 FD20T6 FD25C6 FD25T6 FD20W6 FD25W6:83242-

Item No	Part No.	Mark	Description		Req'd	Remarks : Serial No.
1	214A3-00301		HOUSING,AXLE	ﾊｳｼﾞﾝｸﾞ	1	
-	534A7-52011		HOUSING,AXLE	ﾊｳｼﾞﾝｸﾞ	1	[SM][SAS]
2	15573-42151		BREATHER,AIR	ﾌﾞﾘｰｻﾞ	1	
3	22193-03001		PLUG	ﾌﾟﾗｸﾞ	4	
4	24452-52002		PACKING	ﾊﾟｯｷﾝｸﾞ	1	
5	01106-12040		BOLT	ﾎﾞﾙﾄ	12	
6	02011-00012		WASHER	ﾜｯｼｬ	12	
7	02212-10020		PIN,PARALLEL	ﾋﾟﾝ	1	
8	214A3-02011		SHAFT,DRIVE	ｼｬﾌﾄ	2	
9	24453-02102		PACKING	ﾊﾟｯｷﾝｸﾞ	2	
10	24453-02061		BOLT,REAMER	ﾎﾞﾙﾄ	24	
11	239A3-02001		HUB & DRUM	ﾊﾌﾞ&ﾄﾞﾗﾑ	2	
-	514A7-42002		HUB,FRONT	ﾊﾌﾞ	2	[DD][SDD]
12	53657-42081		DRUM,BRAKE	ﾄﾞﾗﾑ	2	[DD][SDD]
13	24353-72001		BOLT,HUB	ﾎﾞﾙﾄ	12	
-	53657-42091		BOLT,HUB	ﾎﾞﾙﾄ	12	[DD][SDD]
14	01400-10020		NUT	ﾅｯﾄ	12	
15	03071-30214		BRG,TAPER-ROLLER	ﾍﾞｱﾘﾝｸﾞ	2	
16	23453-02071		BRG,TAPER-ROLLER	ﾍﾞｱﾘﾝｸﾞ	2	INC.17
17	23453-02131		SEAL,OIL	ｼｰﾙ	2	
18	23653-02001		SEAL,OIL	ｼｰﾙ	2	
19	24453-02121		RETAINER	ﾘﾃｰﾅ	2	
20	23453-02091		WASHER	ﾜｯｼｬ	2	
21	03192-00012		NUT,BRG	ﾅｯﾄ	4	
22	03192-10012		WASHER,BRG	ﾜｯｼｬ	2	

FIG.89 WHEEL BRAKE

(F5023710) ホイールブレーキ

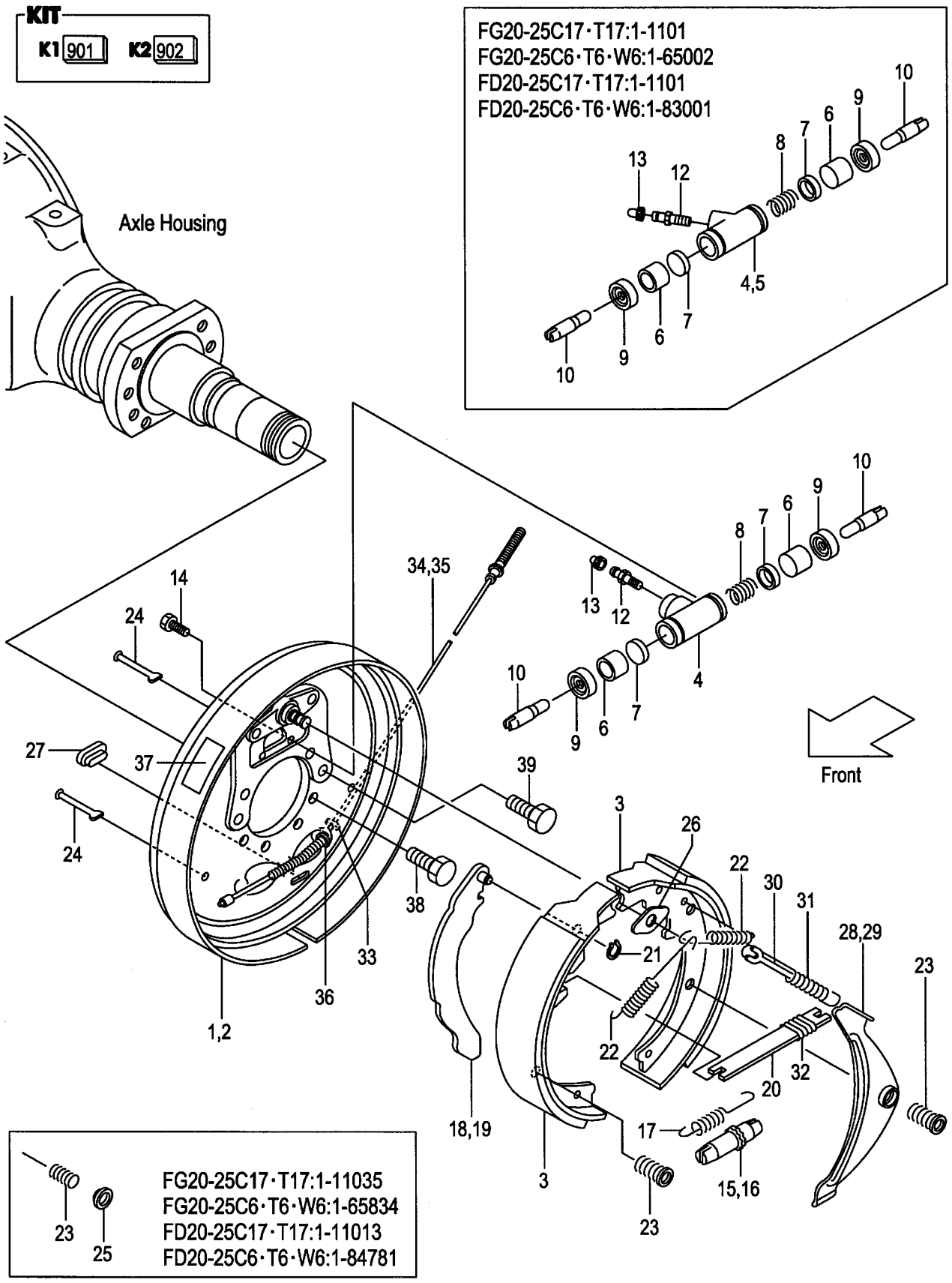

A:FG20C17 FG20T17 FG25C17 FG25T17 C:FD20C17 FD20T17 FD25C17 FD25T17
B:FG20C6 FG20T6 FG25C6 FG25T6 FG20W6 FG25W6 D:FD20C6 FD20T6 FD25C6 FD25T6 FD20W6 FD25W6

Item No	Part No.	Mark	Description		Req'd	Remarks : Serial No.
A1	222A3-70203		BRAKE-ASSY,RH	ﾌﾞﾚｰｷｱｯｾﾝ	1	A,C:1-11001 B:1-65002 D:1-83001 INC.1,3,4,6-15,17,18,20-28, 30-34,36,37
-	522A2-60553		BRAKE-ASSY,RH	ﾌﾞﾚｰｷｱｯｾﾝ	1	A,C:11002- B:65003- D:83002- INC.1,3,4,6-15,17,18,20-28, 30-34,36,37
A2	222A3-70213		BRAKE-ASSY,LH	ﾌﾞﾚｰｷｱｯｾﾝ	1	A,C:1-11001 B:1-65002 D:1-83001 INC.2,3,5-14,16,17,19-27, 29-33,35-37
-	522A2-60563		BRAKE-ASSY,LH	ﾌﾞﾚｰｷｱｯｾﾝ	1	A,C:11002- B:65003- D:83002- INC.2-4,6-14,16,17,19-27, 29-33,35-37
901	522A2-61561	K1	KIT,BRAKE-SHOE	ｼｭｰｷｯﾄ	2	A,C:11002- B:65003- D:83002- INC.3
1	23653-72001		PLATE,BACK,RH	ﾌﾟﾚｰﾄ	1	A,C:1-11001 B:1-65002 D:1-83001
-	234A3-72021		PLATE,BACK,RH	ﾌﾟﾚｰﾄ	1	A,C:11002- B:65003- D:83002-
2	23653-73011		PLATE,BACK,LH	ﾌﾟﾚｰﾄ	1	A,C:1-11001 B:1-65002 D:1-83001
-	234A3-72031		PLATE,BACK,LH	ﾌﾟﾚｰﾄ	1	A,C:11002- B:65003- D:83002-
3	23653-73021		SHOE,BRAKE	ｼｭｰ	4	A,C:1-11001 B:1-65002 D:1-83001
-	NO PART NO.	#*	SHOE,BRAKE	ｼｭｰ	4	A,C:11002- B:65003- D:83002-
A3	22673-72031		CYL-ASSY,WHEEL,RH	ﾎｲｰﾙｼﾘﾝﾀﾞｱｯｾﾝ	1	A,C:1-11001 B:1-65002 D:1-83001 INC.4,6-13
-	234A3-72001		CYL-ASSY,WHEEL	ﾎｲｰﾙｼﾘﾝﾀﾞｱｯｾﾝ	2	A,C:11002- B:65003- D:83002- INC.4,6-13

FIG.89 WHEEL BRAKE

(F5023710) ホイールブレーキ

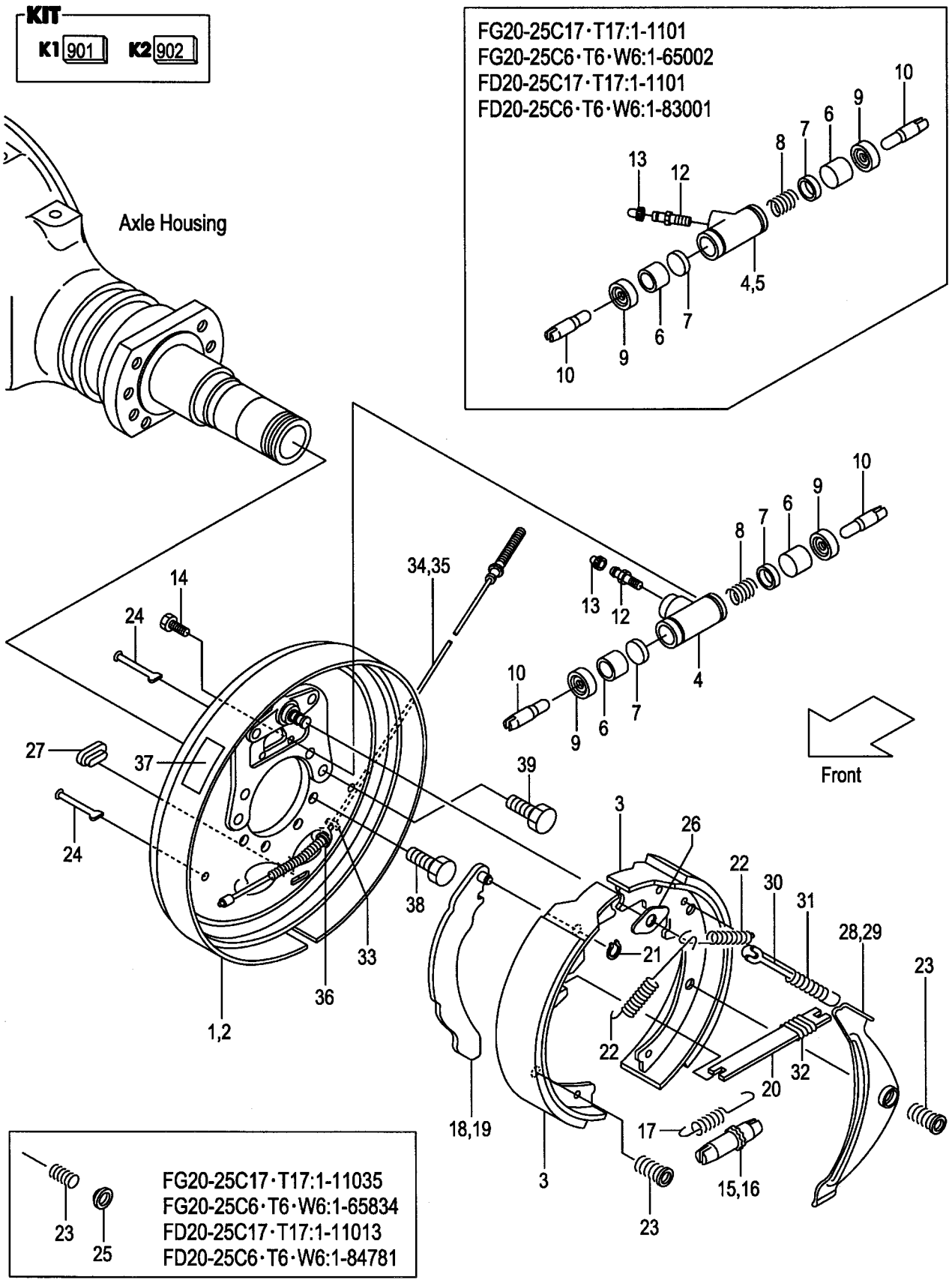

A:FG20C17 FG20T17 FG25C17 FG25T17 C:FD20C17 FD20T17 FD25C17 FD25T17
B:FG20C6 FG20T6 FG25C6 FG25T6 FG20W6 FG25W6 D:FD20C6 FD20T6 FD25C6 FD25T6 FD20W6 FD25W6

Item No	Part No.	Mark	Description		Req'd	Remarks : Serial No.
A4	22673-72041		CYL-ASSY,WHEEL,LH	ﾎｲｰﾙｼﾘﾝﾀﾞｱｯｾﾝ	1	A,C:1-11001 B:1-65002 D:1-83001 INC.5-13
902	22673-79801	K2	KIT,WHEEL-CYL	ｼﾘﾝﾀﾞｷｯﾄ	2	INC.6-9
4	NO PART NO.	#	BODY,WHEEL-CYL,RH	ﾎﾞﾃﾞｨ	1	A,C:1-11001 B:1-65002 D:1-83001
-	NO PART NO.	#	BODY,WHEEL-CYL	ﾎﾞﾃﾞｨ	2	A,C:11002- B:65003- D:83002-
5	NO PART NO.	#	BODY,WHEEL-CYL,LH	ﾎﾞﾃﾞｨ	1	A,C:1-11001 B:1-65002 D:1-83001
6	NO PART NO.	#*	PISTON	ﾋﾟｽﾄﾝ	4	
7	NO PART NO.	#*	CUP,PISTON	ｶｯﾌﾟ	4	
8	NO PART NO.	#*	SPRING	ｽﾌﾟﾘﾝｸﾞ	2	
9	NO PART NO.	#*	COVER,DUST	ｶﾊﾞｰ	4	
10	22673-72111		ROD,PISTON	ﾛｯﾄﾞ	4	
11	22673-72121	+	SEAT,TUBE	ｼｰﾄ	2	
12	22673-72131		SCREW,BLEEDER	ｽｸﾘｭ	2	
13	22673-72141		CAP,BLEEDER-SCREW	ｷｬｯﾌﾟ	2	
14	22673-72161		BOLT	ﾎﾞﾙﾄ	4	
15	23653-72031		ADJUSTER,RH	ｱｼﾞｬｽﾀ	1	
16	23653-72041		ADJUSTER,LH	ｱｼﾞｬｽﾀ	1	
17	23653-72051		SPRING,ADJUSTER	ｽﾌﾟﾘﾝｸﾞ	2	
18	23653-72062		LEVER,BRAKE,RH	ﾚﾊﾞｰ	1	
19	23653-72072		LEVER,BRAKE,LH	ﾚﾊﾞｰ	1	
20	23653-72081		STRUT	ｽﾄﾗｯﾄ	2	
21	22673-72252		RETAINER	ﾘﾃｰﾅ	2	
22	22673-72261		SPRING,SHOE-RETURN	ｽﾌﾟﾘﾝｸﾞ	4	
23	23653-72091		SPRING,SHOE-HOLD	ｽﾌﾟﾘﾝｸﾞ	8	A:1-11035 B:1-65834 C:1-11013 D:1-84781
-	234A3-72101		SPRING,SHOE-HOLD	ｽﾌﾟﾘﾝｸﾞ	8	A:11036- B:65835- C:11014- D:84782-
24	23653-72101		PIN,SHOE-HOLD	ﾋﾟﾝ	8	
25	23653-72111		CUP,WASHER	ｶｯﾌﾟ	8	A:1-11035 B:1-65834 C:1-11013 D:1-84781
26	23653-72131		PLATE,SHOE-GUIDE	ﾌﾟﾚｰﾄ	2	
27	22673-72321		PLUG,RUBBER	ﾌﾟﾗｸﾞ	2	
28	23653-72141		LEVER,PAWL,RH	ﾚﾊﾞｰ	1	
29	23653-72151		LEVER,PAWL,LH	ﾚﾊﾞｰ	1	
30	23653-72161		STOPPER,PAWL-LEVER	ｽﾄｯﾊﾟ	2	

FIG.89 WHEEL BRAKE

(F5023710) ホイールブレーキ

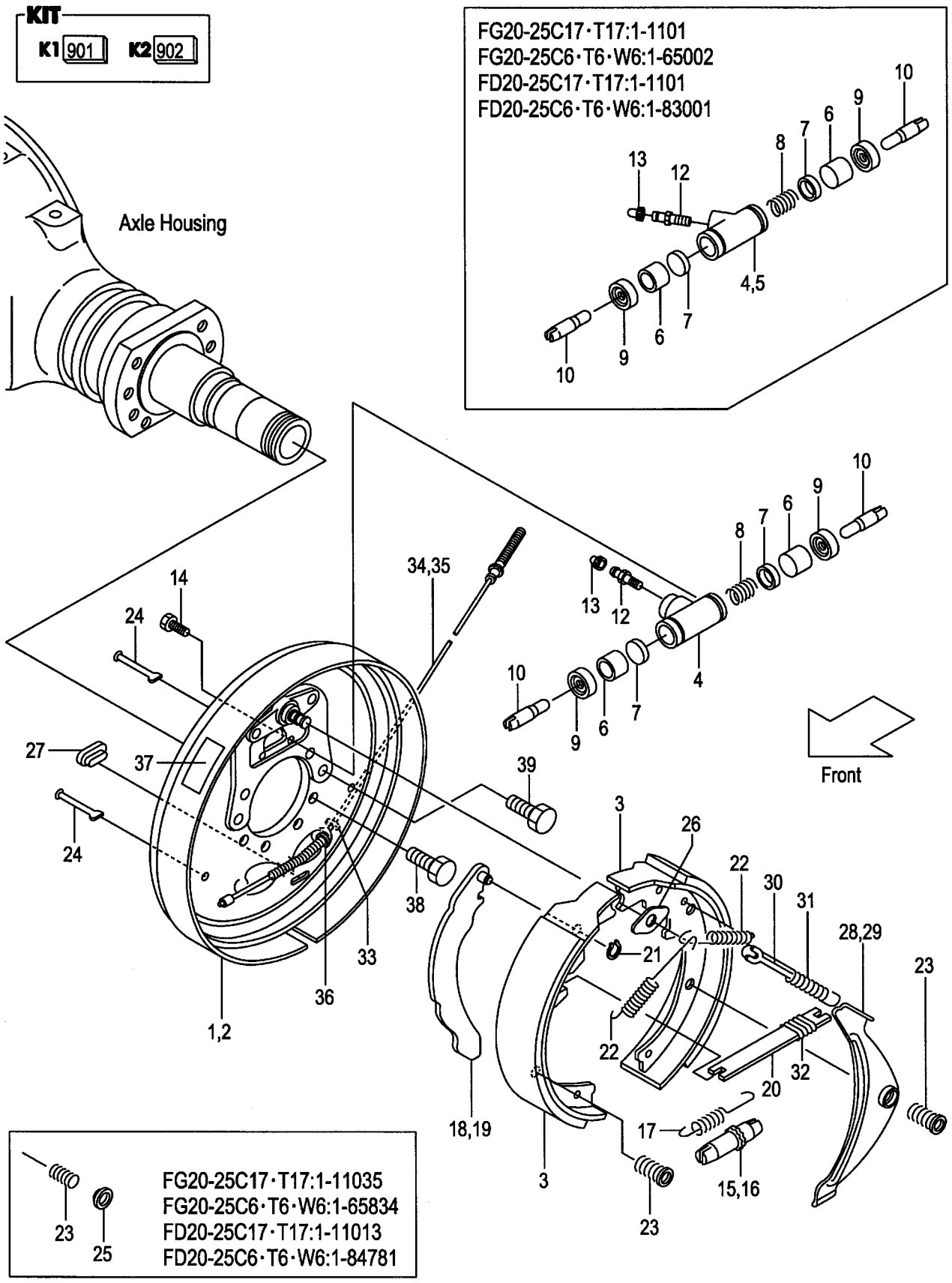

A:FG20C17 FG20T17 FG25C17 FG25T17 C:FD20C17 FD20T17 FD25C17 FD25T17
B:FG20C6 FG20T6 FG25C6 FG25T6 FG20W6 FG25W6 D:FD20C6 FD20T6 FD25C6 FD25T6 FD20W6 FD25W6

Item No	Part No.	Mark	Description		Req'd	Remarks : Serial No.
31	23653-72171		SPRING,ACTUATOR	ｽﾌﾟﾘﾝｸﾞ	2	
32	22673-72391		SPRING,ANTIRATTLE	ｽﾌﾟﾘﾝｸﾞ	2	
33	22673-72411		PACKING,RUBBER	ﾊﾟｯｷﾝｸﾞ	2	
34	222A3-72011		CABLE,CONTROL,RH	ｹｰﾌﾞﾙ	1	
35	222A3-72021		CABLE,CONTROL,LH	ｹｰﾌﾞﾙ	1	
36	23653-72201		RETAINER	ﾘﾃｰﾅ	2	
37	NO PART NO.		DECAL,CAUTION	ﾃﾞｶﾙ	2	
38	214A3-02001		BOLT	ﾎﾞﾙﾄ	12	
39	25953-72001		BOLT,DISC	ﾎﾞﾙﾄ	4	

FIG.90 STEERING WHEEL UNIT

(F5024110) ステアリング゛ホイールユニット

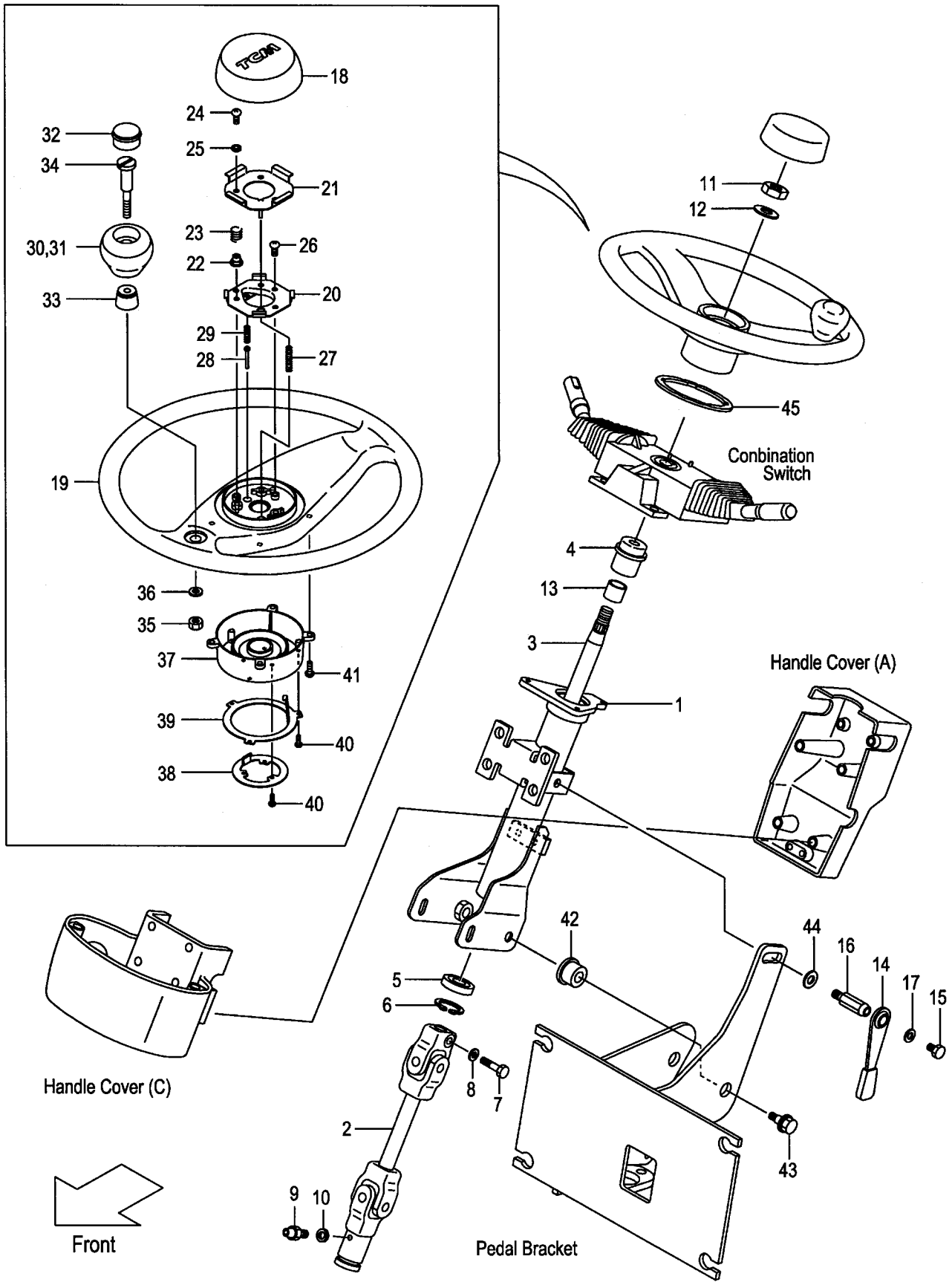

A:FG20C17 FG20T17 FG25C17 FG25T17 C:FD20C17 FD20T17 FD25C17 FD25T17
B:FG20C6 FG20T6 FG25C6 FG25T6 FG20W6 FG25W6 D:FD20C6 FD20T6 FD25C6 FD25T6 FD20W6 FD25W6

Item No	Part No.	Mark	Description		Req'd	Remarks : Serial No.
A1	239A4-12102		SHAFT-ASSY,STEERING	ｽﾃｱﾘﾝｸﾞｼｬﾌﾄｱｯｾﾝ	1	INC.1-13
1	239A4-12112		COLUMN	ｺﾗﾑ	1	
2	239A4-12121		JOINT,UNIVERSAL	ｼﾞｮｲﾝﾄ	1	
3	239A4-12131		SHAFT	ｼｬﾌﾄ	1	
4	NO PART NO.		BUSHING,COLUMN	ﾌﾞｯｼﾝｸﾞ	1	
5	NO PART NO.		BRG,BALL	ﾍﾞｱﾘﾝｸﾞ	1	
6	NO PART NO.		RING,SNAP	ｽﾅｯﾌﾟﾘﾝｸﾞ	1	
7	NO PART NO.		BOLT	ﾎﾞﾙﾄ	1	
8	NO PART NO.		WASHER	ﾜｯｼｬ	1	
9	NO PART NO.		FITTING	ﾌｨｯﾃｨﾝｸﾞ	1	
10	NO PART NO.		WASHER	ﾜｯｼｬ	1	
11	01402-00014		NUT	ﾅｯﾄ	1	
12	14354-12271		WASHER	ﾜｯｼｬ	1	
13	243C4-12021		BUSHING,DU	ﾌﾞｯｼﾝｸﾞ	1	
A2	239A4-12402		LEVER-ASSY,TILT-LOCK	ﾃｨﾙﾄﾛｯｸﾚﾊﾞｰｱｯｾﾝ	1	INC.14-17
14	239A4-12411		LEVER	ﾚﾊﾞｰ	1	
15	239A4-12441		BOLT	ﾎﾞﾙﾄ	1	
16	239A4-12431		BOLT,LOCK	ﾎﾞﾙﾄ	1	
17	214A4-12161		WASHER	ﾜｯｼｬ	1	
A3	209K4-10801		WHEEL-ASSY,STEERING	ｽﾃｱﾘﾝｸﾞﾎｲｰﾙｱｯｾﾝ	1	INC.18-41
18	216G4-12761		PAD,HORN	ﾊﾟｯﾄﾞ	1	
19	209K4-12561		WHEEL,STEERING	ﾎｲｰﾙ	1	
A4	271F4-12221		SWITCH-ASSY	ｽｲｯﾁｱｯｾﾝ	1	INC.20-25
20	NO PART NO.	#	PLATE,CONTACT,A	ﾌﾟﾚｰﾄ	1	
21	NO PART NO.	#	PLATE,CONTACT,B	ﾌﾟﾚｰﾄ	1	
22	216G4-12601		INSULATOR	ｲﾝｼｭﾚｰﾀ	3	
23	216G4-12611		SPRING,HORN	ｽﾌﾟﾘﾝｸﾞ	3	
24	216G4-12621		SCREW	ｽｸﾘｭ	3	
25	216G4-12631		WASHER,FIVER	ﾜｯｼｬ	3	
26	216G4-12641		SCREW	ｽｸﾘｭ	2	
27	216G4-12661		SPRING,EARTH	ｽﾌﾟﾘﾝｸﾞ	1	
28	271F4-12231		PLUNGER	ﾌﾟﾗﾝｼﾞｬ	1	
29	271F4-12241		SPRING,PLUNGER	ｽﾌﾟﾘﾝｸﾞ	1	
A5	216G4-12681		KNOB-ASSY	ﾉﾌﾞｱｯｾﾝ	1	INC.30-36
30	NO PART NO.	#	KNOB	ﾉﾌﾞ	1	
31	NO PART NO.	#	INSERT,KNOB	ｲﾝｻｰﾄ	1	
32	216G4-12711		CAP	ｷｬｯﾌﾟ	1	
33	NO PART NO.	#	BUSHING	ﾌﾞｯｼﾝｸﾞ	1	
34	NO PART NO.	#	SHAFT	ｼｬﾌﾄ	1	
35	216G4-12741		NUT	ﾅｯﾄ	1	
36	216G4-12751		WASHER	ﾜｯｼｬ	1	
37	209K4-12541		COVER,CANCEL-CAM	ｶﾊﾞｰ	1	
38	209K4-12531		RING,CONTACT,A	ﾘﾝｸﾞ	1	
39	209K4-12521		RING,CONTACT,B	ﾘﾝｸﾞ	1	
40	209K4-12511		SCREW	ｽｸﾘｭ	6	
41	209K4-12501		SCREW	ｽｸﾘｭ	4	
42	216G4-12101		BUSHING	ﾌﾞｯｼﾝｸﾞ	2	
43	216G4-12111		BOLT	ﾎﾞﾙﾄ	2	
44	02000-00012		WASHER	ﾜｯｼｬ	1	

FIG.90 STEERING WHEEL UNIT

(F5024110) ステアリング゛ホイールユニット

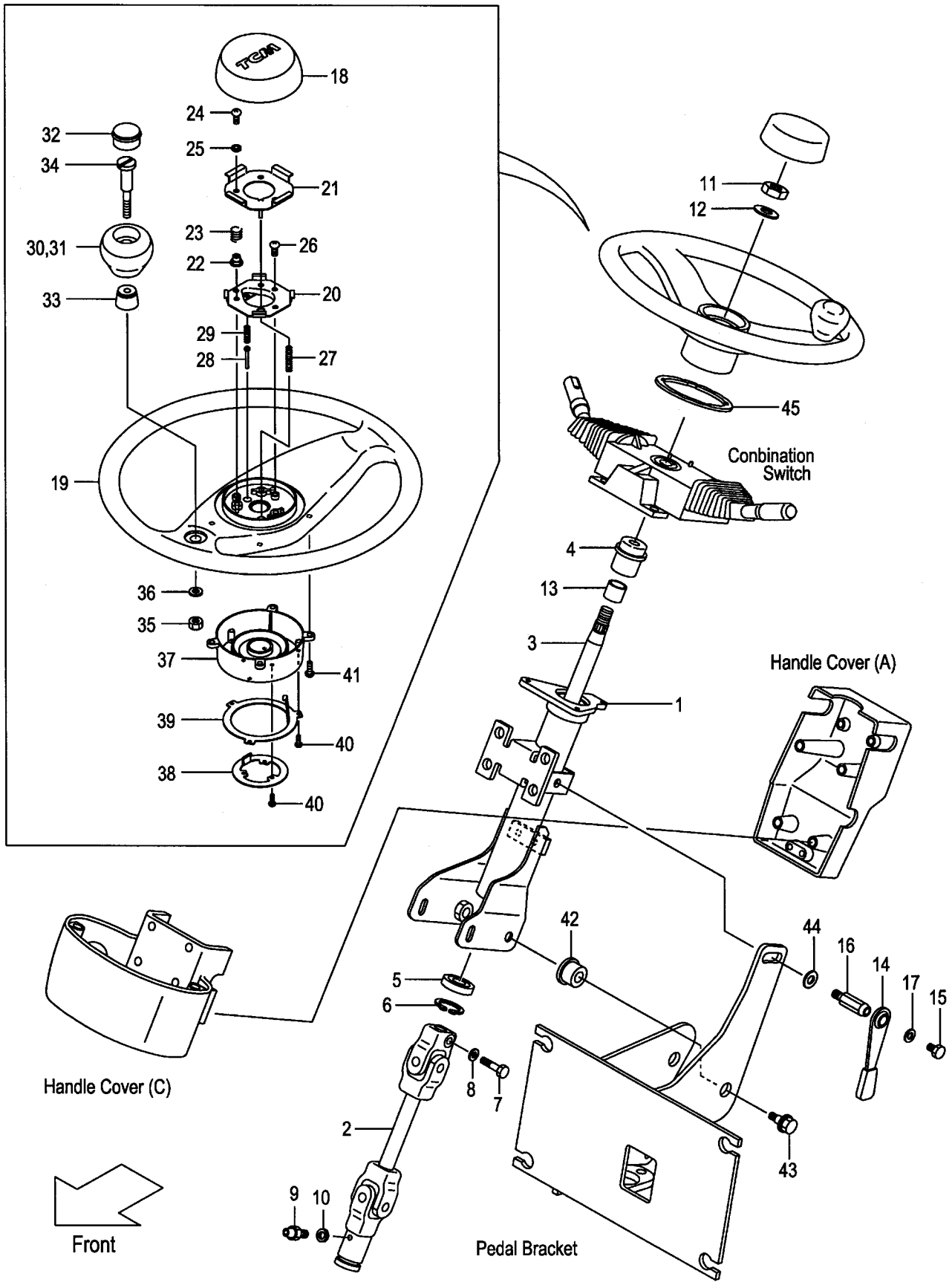

A:FG20C17 FG20T17 FG25C17 FG25T17 C:FD20C17 FD20T17 FD25C17 FD25T17
B:FG20C6 FG20T6 FG25C6 FG25T6 FG20W6 FG25W6 D:FD20C6 FD20T6 FD25C6 FD25T6 FD20W6 FD25W6

Item No	Part No.	Mark	Description	Req'd	Remarks : Serial No.
45	209P4-12111		RUBBER,HANDLE-WHEEL ﾗﾊﾞｰ	1	A:11025- B:65466- C:11011- D:84011-

FIG.91 STEERING WHEEL UNIT (TOR-CON):[EXN]

(F5024150) ステアリング゛ホイールユニット

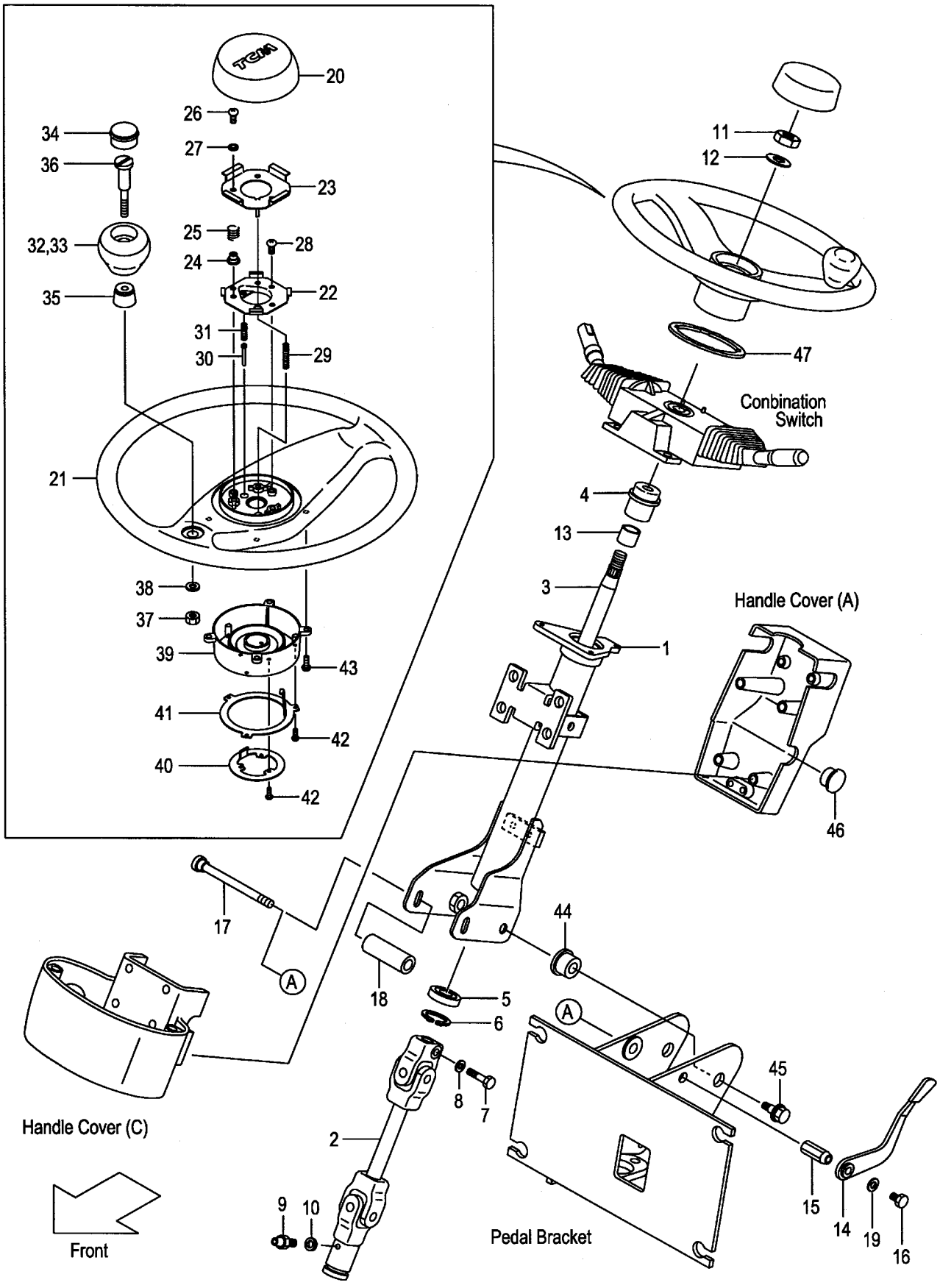

A:FG20T6 FG25T6
B:FD20T6 FD25T6

FIG.91
(F5024150)

Item No	Part No.	Mark	Description		Req'd	Remarks : Serial No.
A1	539A2-60301		SHAFT-ASSY,STEERING	ｽﾃｱﾘﾝｸﾞｼｬﾌﾄｱｯｾﾝ	1	[EXN] INC.1-13
1	539A2-62301		COLUMN	ｺﾗﾑ	1	[EXN]
2	239A4-12121		JOINT,UNIVERSAL	ｼﾞｮｲﾝﾄ	1	[EXN]
3	539A2-62321		SHAFT	ｼｬﾌﾄ	1	[EXN]
4	NO PART NO.		BUSHING,COLUMN	ﾌﾞｯｼﾝｸﾞ	1	[EXN]
5	NO PART NO.		BRG,BALL	ﾍﾞｱﾘﾝｸﾞ	1	[EXN]
6	NO PART NO.		RING,SNAP	ｽﾅｯﾌﾟﾘﾝｸﾞ	1	[EXN]
7	NO PART NO.		BOLT	ﾎﾞﾙﾄ	1	[EXN]
8	NO PART NO.		WASHER	ﾜｯｼｬ	1	[EXN]
9	NO PART NO.		FITTING	ﾌｨｯﾃｨﾝｸﾞ	1	[EXN]
10	NO PART NO.		WASHER	ﾜｯｼｬ	1	[EXN]
11	01402-00014		NUT	ﾅｯﾄ	1	[EXN]
12	14354-12271		WASHER	ﾜｯｼｬ	1	[EXN]
13	243C4-12021		BUSHING,DU	ﾌﾞｯｼﾝｸﾞ	1	[EXN]
A2	209K4-10601		LEVER-ASSY,TILT-LOCK	ﾃｨﾙﾄﾛｯｸﾚﾊﾞｰｱｯｾﾝ	1	[EXN] INC.14-19
14	216G4-12171		LEVER	ﾚﾊﾞｰ	1	[EXN]
15	209K4-12301		NUT,LOCK	ﾅｯﾄ	1	[EXN]
16	215E4-12231		BOLT	ﾎﾞﾙﾄ	1	[EXN]
17	216G4-12151		BOLT,LOCK	ﾎﾞﾙﾄ	1	[EXN]
18	216G4-12161		COLLAR	ｶﾗｰ	1	[EXN]
19	214A4-12161		WASHER	ﾜｯｼｬ	1	[EXN]
A3	209K4-10801		WHEEL-ASSY,STEERING	ｽﾃｱﾘﾝｸﾞﾎｲｰﾙｱｯｾﾝ	1	[EXN] INC.20-43
20	216G4-12761		PAD,HORN	ﾊﾟｯﾄﾞ	1	[EXN]
21	209K4-12561		WHEEL,STEERING	ﾎｲｰﾙ	1	[EXN]
A4	271F4-12221		SWITCH-ASSY	ｽｲｯﾁｱｯｾﾝ	1	[EXN] INC.22-27
22	NO PART NO.	#	PLATE,CONTACT,A	ﾌﾟﾚｰﾄ	1	[EXN]
23	NO PART NO.	#	PLATE,CONTACT,B	ﾌﾟﾚｰﾄ	1	[EXN]
24	216G4-12601		INSULATOR	ｲﾝｼｭﾚｰﾀ	3	[EXN]
25	216G4-12611		SPRING,HORN	ｽﾌﾟﾘﾝｸﾞ	3	[EXN]
26	216G4-12621		SCREW	ｽｸﾘｭ	3	[EXN]
27	216G4-12631		WASHER,FIVER	ﾜｯｼｬ	3	[EXN]
28	216G4-12641		SCREW	ｽｸﾘｭ	2	[EXN]
29	216G4-12661		SPRING,EARTH	ｽﾌﾟﾘﾝｸﾞ	1	[EXN]
30	271F4-12231		PLUNGER	ﾌﾟﾗﾝｼﾞｬ	1	[EXN]
31	271F4-12241		SPRING,PLUNGER	ｽﾌﾟﾘﾝｸﾞ	1	[EXN]
A5	216G4-12681		KNOB-ASSY	ﾉﾌﾞｱｯｾﾝ	1	[EXN] INC.32-38
32	NO PART NO.	#	KNOB	ﾉﾌﾞ	1	[EXN]
33	NO PART NO.	#	INSERT,KNOB	ｲﾝｻｰﾄ	1	[EXN]
34	216G4-12711		CAP	ｷｬｯﾌﾟ	1	[EXN]
35	NO PART NO.	#	BUSHING	ﾌﾞｯｼﾝｸﾞ	1	[EXN]
36	NO PART NO.	#	SHAFT	ｼｬﾌﾄ	1	[EXN]
37	216G4-12741		NUT	ﾅｯﾄ	1	[EXN]
38	216G4-12751		WASHER	ﾜｯｼｬ	1	[EXN]
39	209K4-12541		COVER,CANCEL-CAM	ｶﾊﾞｰ	1	[EXN]
40	209K4-12531		RING,CONTACT,A	ﾘﾝｸﾞ	1	[EXN]
41	209K4-12521		RING,CONTACT,B	ﾘﾝｸﾞ	1	[EXN]
42	209K4-12511		SCREW	ｽｸﾘｭ	6	[EXN]
43	209K4-12501		SCREW	ｽｸﾘｭ	4	[EXN]
44	216G4-12101		BUSHING	ﾌﾞｯｼﾝｸﾞ	2	[EXN]
45	216G4-12111		BOLT	ﾎﾞﾙﾄ	2	[EXN]

FIG.91 STEERING WHEEL UNIT (TOR-CON):[EXN]

(F5024150) ステアリング゛ホイールユニット

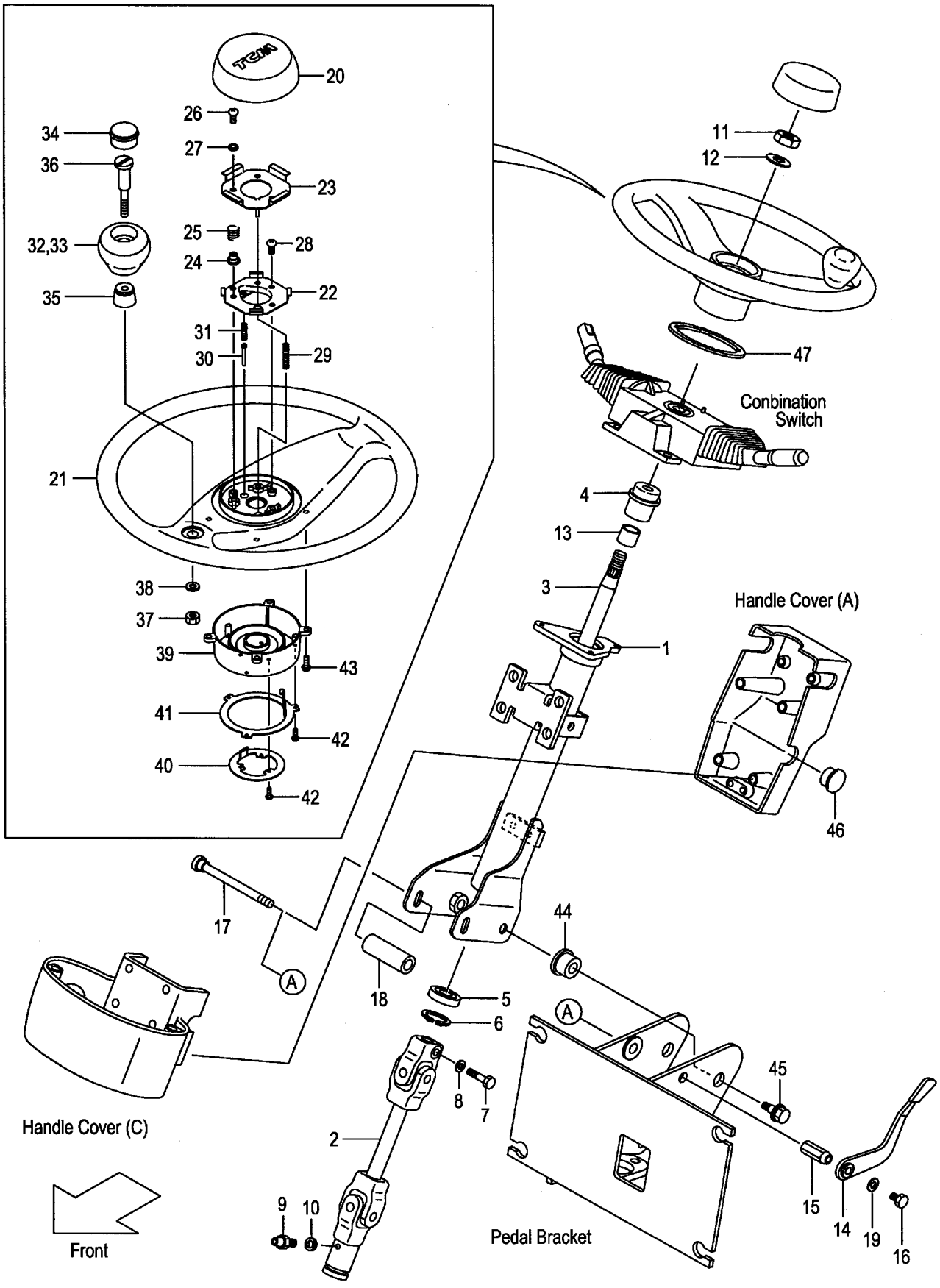

A:FG20T6 FG25T6
B:FD20T6 FD25T6

FIG.91
(F5024150)

Item No	Part No.	Mark	Description	Req'd	Remarks : Serial No.
46	514A5-12701		PLUG,HOLE ﾌﾟﾗｸﾞ	1	[EXN]
47	209P4-12111		RUBBER,HANDLE-WHEEL ﾗﾊﾞｰ	1	A:65466- B:84011- [EXN]

FIG.92 GEAR BOX

(F5024120) ｷﾞﾔｰﾎﾞｯｸｽ

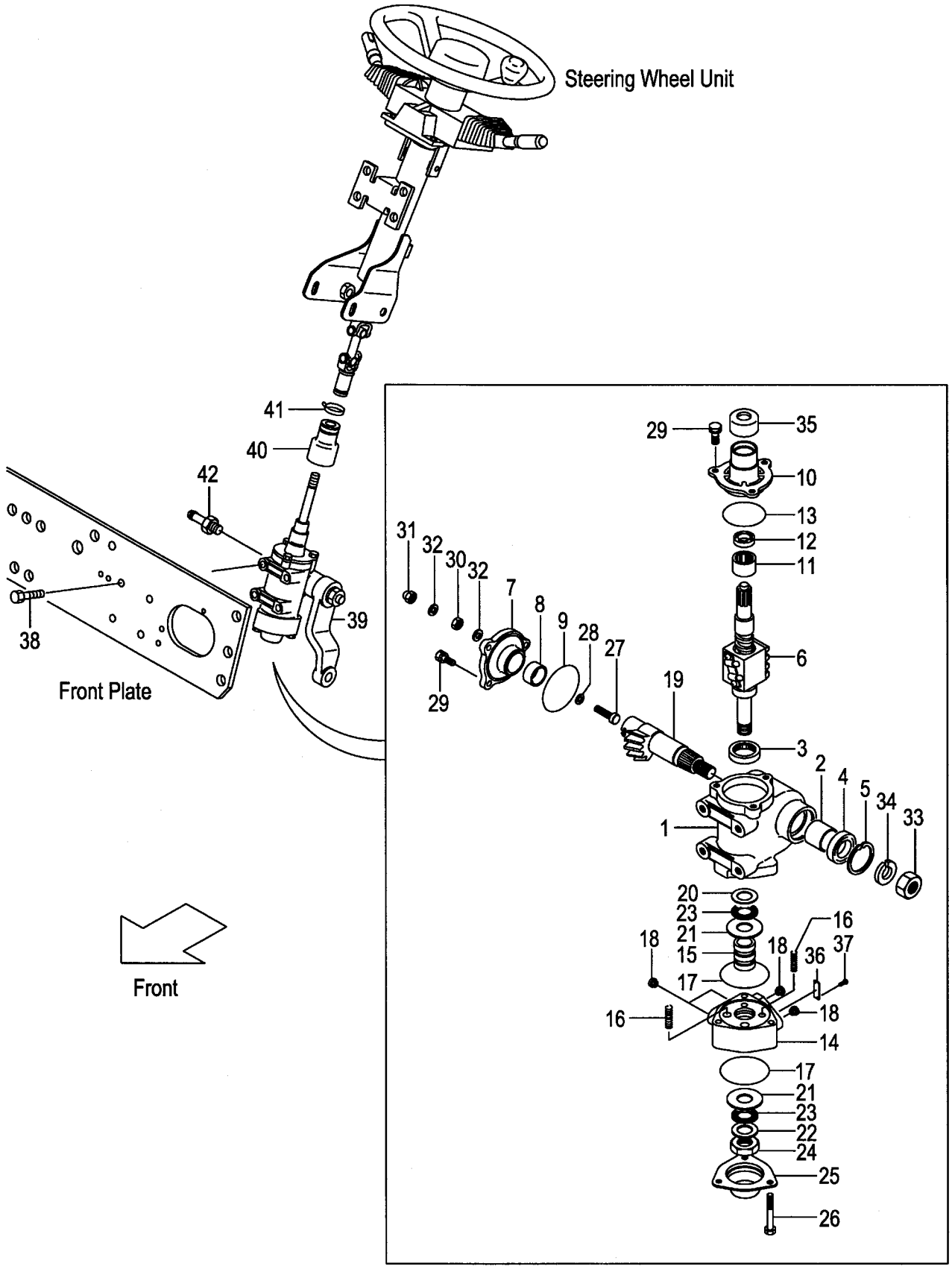

A:FG20C17 FG20T17 FG25C17 FG25T17 C:FD20C17 FD20T17 FD25C17 FD25T17
B:FG20C6 FG20T6 FG25C6 FG25T6 FG20W6 FG25W6 D:FD20C6 FD20T6 FD25C6 FD25T6 FD20W6 FD25W6

Item No	Part No.	Mark	Description		Req'd	Remarks : Serial No.
A1	239A4-12201		BOX-ASSY,GEAR	ｷﾞﾔｰﾎﾞｯｸｽｱｯｾﾝ	1	INC.1-37
A2	B-23643-00526		CASE-ASSY,GEAR	ｷﾞﾔｰｹｰｽｱｯｾﾝ	1	INC.1-5
1	NO PART NO.	#	CASE,GEAR	ｹｰｽ	1	
2	B-23641-03716		BUSHING	ﾌﾞｯｼﾝｸﾞ	1	
3	B-23451-02016		BRG,RADIAL	ﾍﾞｱﾘﾝｸﾞ	1	
4	B-23711-01922		SEAL,OIL	ｼｰﾙ	1	
5	B-94721-38151		RING,SNAP	ｽﾅｯﾌﾟﾘﾝｸﾞ	1	
6	B-B3613-13001		SCREW,BALL	ｽｸﾘｭ	1	
A3	B-23642-00911		COVER-ASSY,SIDE	ｶﾊﾞｰｱｯｾﾝ	1	INC.7-9
7	NO PART NO.	#	COVER,SIDE	ｶﾊﾞｰ	1	
8	B-23641-03716		BUSHING	ﾌﾞｯｼﾝｸﾞ	1	
9	B-95121-06000		O-RING	Oﾘﾝｸﾞ	1	
A4	B-23643-00618		COVER-ASSY,TOP	ﾄｯﾌﾟｶﾊﾞｰｱｯｾﾝ	1	INC.10-13
10	NO PART NO.	#	COVER,TOP	ｶﾊﾞｰ	1	
11	NO PART NO.	#	BRG,RADIAL	ﾍﾞｱﾘﾝｸﾞ	1	
12	NO PART NO.	#	SEAL,OIL	ｼｰﾙ	1	
13	B-95121-06000		O-RING	Oﾘﾝｸﾞ	1	
A5	B-23643-00296		HOUSING-ASSY,VALAE	ﾊﾞﾙﾌﾞﾊｳｼﾞﾝｸﾞｱｯｾﾝ	1	INC.14-18
14	NO PART NO.	#	HOUSING,VALVE	ﾊｳｼﾞﾝｸﾞ	1	
15	NO PART NO.	#	SPOOL	ｽﾌﾟｰﾙ	1	
16	14354-12321		SPRING	ｽﾌﾟﾘﾝｸﾞ	4	
17	B-95151-06300		O-RING	Oﾘﾝｸﾞ	2	
18	25594-52141		FERRULE	ﾌｪﾙｰﾙ	4	
19	B-23641-00313		SHAFT,SECTOR	ｼｬﾌﾄ	1	
20	B-23641-01609		RACE,THRUST	ﾚｰｽ	1	
21	B-23641-01610		RACE,THRUST	ﾚｰｽ	2	
22	B-23451-02212		RACE,THRUST	ﾚｰｽ	1	
23	B-23451-02106		BRG,THRUST	ﾍﾞｱﾘﾝｸﾞ	2	
24	B-23641-02227		NUT	ﾅｯﾄ	1	
25	B-23641-02508		COVER,END	ｶﾊﾞｰ	1	
26	B-23641-03314		BOLT	ﾎﾞﾙﾄ	3	
27	14354-12211		SCREW,ADJUST	ｽｸﾘｭ	1	
28	14354-12221		SHIM,ADJUST-SCREW	ｼﾑ	1	
29	B-23711-03701		BOLT	ﾎﾞﾙﾄ	6	
30	01402-10010		NUT	ﾅｯﾄ	1	
31	14354-12261		NUT,CAP	ﾅｯﾄ	1	
32	14354-12251		PACKING	ﾊﾟｯｷﾝｸﾞ	2	
33	B-23641-02218		NUT	ﾅｯﾄ	1	
34	B-94101-20512		WASHER	ﾜｯｼｬ	1	
35	B-23641-04303		COVER,DUST	ｶﾊﾞｰ	1	
36	NO PART NO.	#	PLATE,NAME	ﾌﾟﾚｰﾄ	1	
37	NO PART NO.	#	SCREW,DRIVE	ｽｸﾘｭ	2	
38	01184-12030		BOLT	ﾎﾞﾙﾄ	4	
39	239A4-22001		ARM,PITMAN	ｱｰﾑ	1	
40	239A4-12211		BOOT,GEAR-BOX	ﾌﾞｰﾂ	1	
41	04913-11200		BAND	ﾊﾞﾝﾄﾞ	1	
42	25597-62211		NIPPLE	ﾆｯﾌﾟﾙ	1	

FIG.93 GEAR BOX [(EXC,EXE,EXK,EXN)/PSS]

(F5024140) ｷﾞﾔｰﾎﾞｯｸｽ

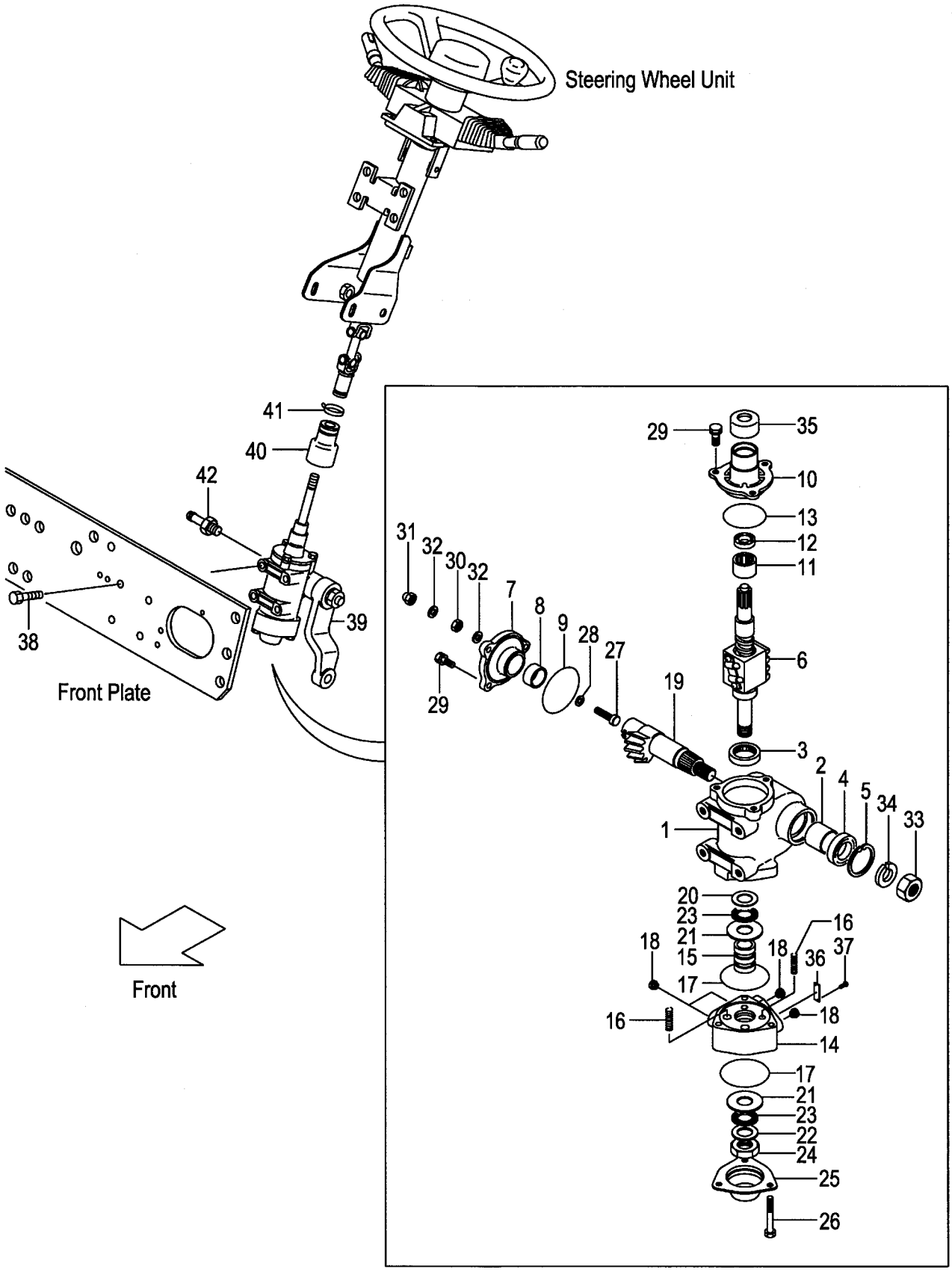

A:FG20C6 FG20T6 FG25C6 FG25T6
B:FD20C6 FD20T6 FD25C6 FD25T6

Item No	Part No.	Mark	Description		Req'd	Remarks : Serial No.
A1	239A4-12201		BOX-ASSY,GEAR	ｷﾞﾔｰﾎﾞｯｸｽｱｯｾﾝ	1	[EXC/PSS][EXE/PSS][EXK/PSS] [EXN/PSS] INC.1-37
A2	B-23643-00526		CASE-ASSY,GEAR	ｷﾞﾔｰｹｰｽｱｯｾﾝ	1	[EXC/PSS][EXE/PSS][EXK/PSS] [EXN/PSS] INC.1-5
1	NO PART NO.	#	CASE,GEAR	ｹｰｽ	1	[EXC/PSS][EXE/PSS][EXK/PSS] [EXN/PSS]
2	B-23641-03716		BUSHING	ﾌﾞｯｼﾝｸﾞ	1	[EXC/PSS][EXE/PSS][EXK/PSS] [EXN/PSS]
3	B-23451-02016		BRG,RADIAL	ﾍﾞｱﾘﾝｸﾞ	1	[EXC/PSS][EXE/PSS][EXK/PSS] [EXN/PSS]
4	B-23711-01922		SEAL,OIL	ｼｰﾙ	1	[EXC/PSS][EXE/PSS][EXK/PSS] [EXN/PSS]
5	B-94721-38151		RING,SNAP	ｽﾅｯﾌﾟﾘﾝｸﾞ	1	[EXC/PSS][EXE/PSS][EXK/PSS] [EXN/PSS]
6	B-B3613-13001		SCREW,BALL	ｽｸﾘｭ	1	[EXC/PSS][EXE/PSS][EXK/PSS] [EXN/PSS]
A3	B-23642-00911		COVER-ASSY,SIDE	ｶﾊﾞｰｱｯｾﾝ	1	[EXC/PSS][EXE/PSS][EXK/PSS] [EXN/PSS] INC.7-9
7	NO PART NO.	#	COVER,SIDE	ｶﾊﾞｰ	1	[EXC/PSS][EXE/PSS][EXK/PSS] [EXN/PSS]
8	B-23641-03716		BUSHING	ﾌﾞｯｼﾝｸﾞ	1	[EXC/PSS][EXE/PSS][EXK/PSS] [EXN/PSS]
9	B-95121-06000		O-RING	Oﾘﾝｸﾞ	1	[EXC/PSS][EXE/PSS][EXK/PSS] [EXN/PSS]
A4	B-23643-00618		COVER-ASSY,TOP	ﾄｯﾌﾟｶﾊﾞｰｱｯｾﾝ	1	[EXC/PSS][EXE/PSS][EXK/PSS] [EXN/PSS] INC.10-13
10	NO PART NO.	#	COVER,TOP	ｶﾊﾞｰ	1	[EXC/PSS][EXE/PSS][EXK/PSS] [EXN/PSS]
11	NO PART NO.	#	BRG,RADIAL	ﾍﾞｱﾘﾝｸﾞ	1	[EXC/PSS][EXE/PSS][EXK/PSS] [EXN/PSS]
12	NO PART NO.	#	SEAL,OIL	ｼｰﾙ	1	[EXC/PSS][EXE/PSS][EXK/PSS] [EXN/PSS]
13	B-95121-06000		O-RING	Oﾘﾝｸﾞ	1	[EXC/PSS][EXE/PSS][EXK/PSS] [EXN/PSS]
A5	B-23643-00296		HOUSING-ASSY,VALAE	ﾊﾞﾙﾌﾞﾊｳｼﾞﾝｸﾞｱｯｾﾝ	1	[EXC/PSS][EXE/PSS][EXK/PSS] [EXN/PSS] INC.14-18
14	NO PART NO.	#	HOUSING,VALVE	ﾊｳｼﾞﾝｸﾞ	1	[EXC/PSS][EXE/PSS][EXK/PSS] [EXN/PSS]
15	NO PART NO.	#	SPOOL	ｽﾌﾟｰﾙ	1	[EXC/PSS][EXE/PSS][EXK/PSS] [EXN/PSS]
16	14354-12321		SPRING	ｽﾌﾟﾘﾝｸﾞ	4	[EXC/PSS][EXE/PSS][EXK/PSS] [EXN/PSS]
17	B-95151-06300		O-RING	Oﾘﾝｸﾞ	2	[EXC/PSS][EXE/PSS][EXK/PSS] [EXN/PSS]
18	25594-52141		FERRULE	ﾌｪﾙｰﾙ	4	[EXC/PSS][EXE/PSS][EXK/PSS] [EXN/PSS]
19	B-23641-00313		SHAFT,SECTOR	ｼｬﾌﾄ	1	[EXC/PSS][EXE/PSS][EXK/PSS] [EXN/PSS]
20	B-23641-01609		RACE,THRUST	ﾚｰｽ	1	[EXC/PSS][EXE/PSS][EXK/PSS] [EXN/PSS]

FIG.93 GEAR BOX [(EXC,EXE,EXK,EXN)/PSS]

(F5024140) ｷﾞﾔｰﾎﾞｯｸｽ

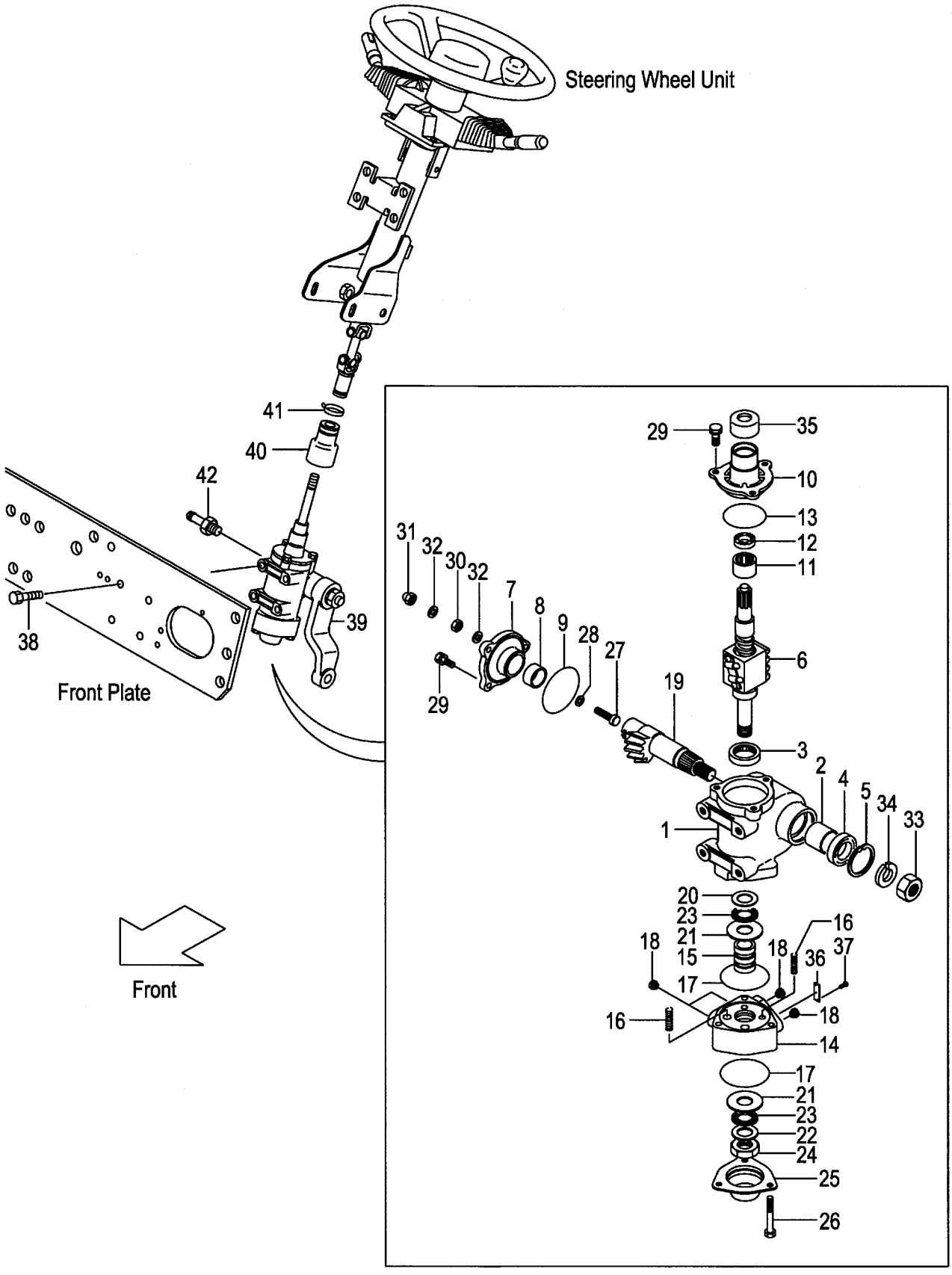

A:FG20C6 FG20T6 FG25C6 FG25T6
B:FD20C6 FD20T6 FD25C6 FD25T6

Item No	Part No.	Mark	Description		Req'd	Remarks : Serial No.
21	B-23641-01610		RACE,THRUST	ﾚｰｽ	2	[EXC/PSS][EXE/PSS][EXK/PSS][EXN/PSS]
22	B-23451-02212		RACE,THRUST	ﾚｰｽ	1	[EXC/PSS][EXE/PSS][EXK/PSS][EXN/PSS]
23	B-23451-02106		BRG,THRUST	ﾍﾞｱﾘﾝｸﾞ	2	[EXC/PSS][EXE/PSS][EXK/PSS][EXN/PSS]
24	B-23641-02227		NUT	ﾅｯﾄ	1	[EXC/PSS][EXE/PSS][EXK/PSS][EXN/PSS]
25	B-23641-02508		COVER,END	ｶﾊﾞｰ	1	[EXC/PSS][EXE/PSS][EXK/PSS][EXN/PSS]
26	B-23641-03314		BOLT	ﾎﾞﾙﾄ	3	[EXC/PSS][EXE/PSS][EXK/PSS][EXN/PSS]
27	14354-12211		SCREW,ADJUST	ｽｸﾘｭ	1	[EXC/PSS][EXE/PSS][EXK/PSS][EXN/PSS]
28	14354-12221		SHIM,ADJUST-SCREW	ｼﾑ	1	[EXC/PSS][EXE/PSS][EXK/PSS][EXN/PSS]
29	B-23711-03701		BOLT	ﾎﾞﾙﾄ	6	[EXC/PSS][EXE/PSS][EXK/PSS][EXN/PSS]
30	01402-10010		NUT	ﾅｯﾄ	1	[EXC/PSS][EXE/PSS][EXK/PSS][EXN/PSS]
31	14354-12261		NUT,CAP	ﾅｯﾄ	1	[EXC/PSS][EXE/PSS][EXK/PSS][EXN/PSS]
32	14354-12251		PACKING	ﾊﾟｯｷﾝｸﾞ	2	[EXC/PSS][EXE/PSS][EXK/PSS][EXN/PSS]
33	B-23641-02218		NUT	ﾅｯﾄ	1	[EXC/PSS][EXE/PSS][EXK/PSS][EXN/PSS]
34	B-94101-20512		WASHER	ﾜｯｼｬ	1	[EXC/PSS][EXE/PSS][EXK/PSS][EXN/PSS]
35	B-23641-04303		COVER,DUST	ｶﾊﾞｰ	1	[EXC/PSS][EXE/PSS][EXK/PSS][EXN/PSS]
36	NO PART NO.	#	PLATE,NAME	ﾌﾟﾚｰﾄ	1	[EXC/PSS][EXE/PSS][EXK/PSS][EXN/PSS]
37	NO PART NO.	#	SCREW,DRIVE	ｽｸﾘｭ	2	[EXC/PSS][EXE/PSS][EXK/PSS][EXN/PSS]
38	01184-12030		BOLT	ﾎﾞﾙﾄ	4	[EXC/PSS][EXE/PSS][EXK/PSS][EXN/PSS]
39	239A4-22001		ARM,PITMAN	ｱｰﾑ	1	[EXC/PSS][EXE/PSS][EXK/PSS][EXN/PSS]
40	239A4-12211		BOOT,GEAR-BOX	ﾌﾞｰﾂ	1	[EXC/PSS][EXE/PSS][EXK/PSS][EXN/PSS]
41	04913-11200		BAND	ﾊﾞﾝﾄﾞ	1	[EXC/PSS][EXE/PSS][EXK/PSS][EXN/PSS]
42	25597-62211		NIPPLE	ﾆｯﾌﾟﾙ	1	[EXC/PSS][EXE/PSS][EXK/PSS][EXN/PSS]

FIG.94 ORBITROL [EXC][EXE][EXK][EXN][OBT]

(F5024130) オービットロール

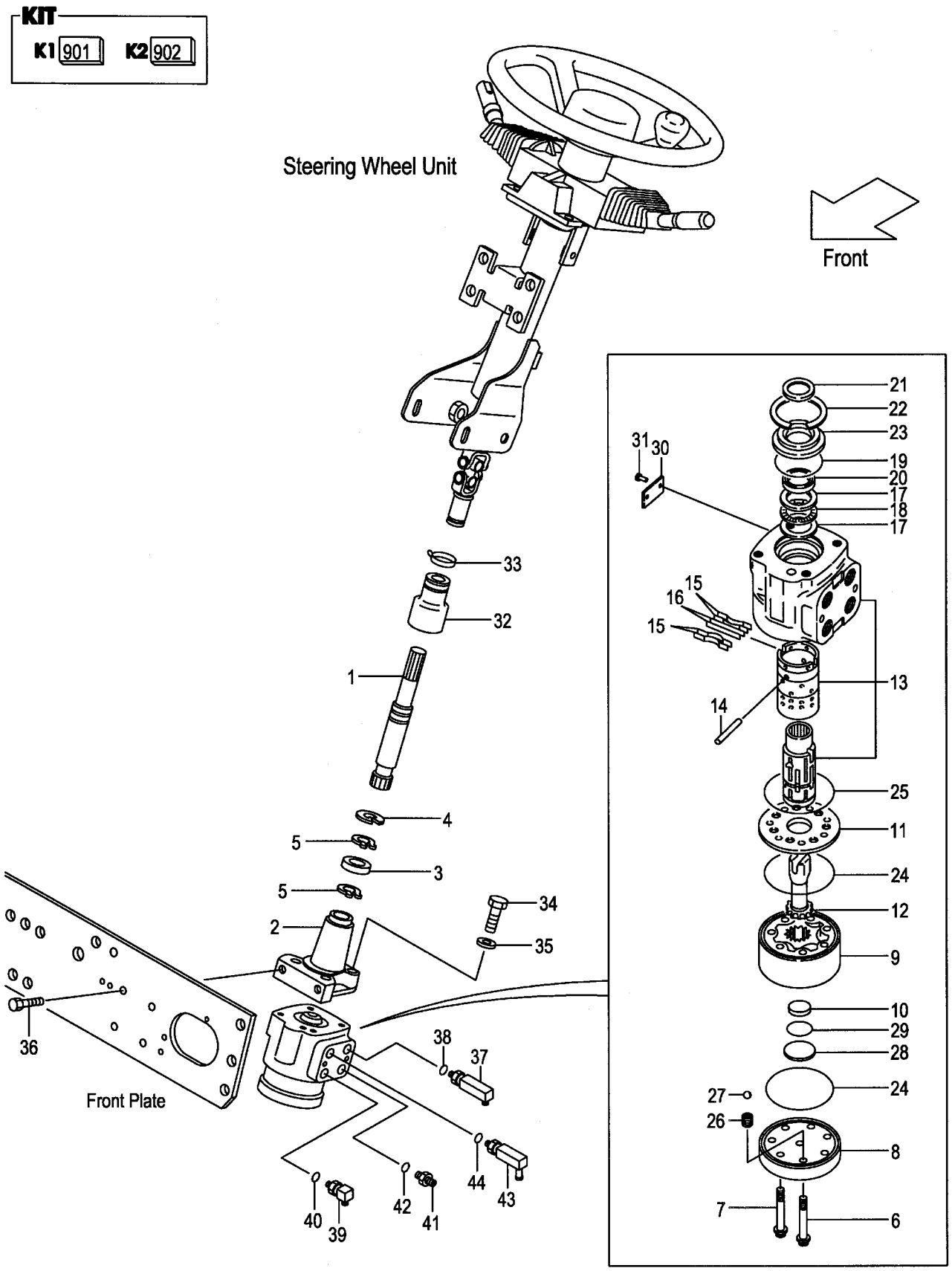

A:FG20C6 FG20T6 FG25C6 FG25T6:1-65449
B:FD20C6 FD20T6 FD25C6 FD25T6:1-83941

Item No	Part No.	Mark	Description		Req'd	Remarks : Serial No.
1	539A2-42001		SHAFT,HANDLE	ｼｬﾌﾄ	1	[EXC][EXE][EXK][EXN][OBT] [EXB/OBT]
2	539A2-42011		FLANGE	ﾌﾗﾝｼﾞ	1	[EXC][EXE][EXK][EXN][OBT] [EXB/OBT]
3	03010-06904		BRG,BALL	ﾍﾞｱﾘﾝｸﾞ	1	[EXC][EXE][EXK][EXN][OBT] [EXB/OBT]
4	02110-00037		RING,SNAP	ｽﾅｯﾌﾟﾘﾝｸﾞ	1	[EXC][EXE][EXK][EXN][OBT] [EXB/OBT]
5	02100-00020		RING,SNAP	ｽﾅｯﾌﾟﾘﾝｸﾞ	2	[EXC][EXE][EXK][EXN][OBT] [EXB/OBT]
A1	15604-10202		UNIT-ASSY,ORBITROL	ｵｰﾋﾞｯﾄﾛｰﾙﾕﾆｯﾄｱｯｾﾝ	1	[EXC][EXE][EXK][EXN][OBT] [EXB/OBT] INC.6-31
901	26094-17021	K1	KIT,BRG,NEEDLE	ﾆｰﾄﾞﾙﾍﾞｱﾘﾝｸﾞｷｯﾄ	1	[EXC][EXE][EXK][EXN][OBT] [EXB/OBT] INC.17,18
902	516G2-42411	K2	KIT,SEAL	ｼｰﾙｷｯﾄ	1	[EXC&E&K&N][OBT][EXB/OBT] INC.19-21,24,25,29
6	26094-17151		SCREW	ｽｸﾘｭ	6	[EXC][EXE][EXK][EXN][OBT] [EXB/OBT]
7	NO PART NO.		SCREW,RETAINER	ｽｸﾘｭ	1	[EXC][EXE][EXK][EXN][OBT] [EXB/OBT]
8	26094-17141		CAP,END	ｷｬｯﾌﾟ	1	[EXC][EXE][EXK][EXN][OBT] [EXB/OBT]
9	26094-17121		GEROTOR	ｼﾞﾛｰﾀ	1	[EXC][EXE][EXK][EXN][OBT] [EXB/OBT]
10	514A2-42601		SPACER	ｽﾍﾟｰｻ	1	[EXC][EXE][EXK][EXN][OBT] [EXB/OBT]
11	26094-17101		PLATE,SPACER	ﾌﾟﾚｰﾄ	1	[EXC][EXE][EXK][EXN][OBT] [EXB/OBT]
12	26094-17111		DRIVE	ﾄﾞﾗｲﾌﾞ	1	[EXC][EXE][EXK][EXN][OBT] [EXB/OBT]
13	516G2-42401		PARTS,CONTROL	ﾊﾟｰﾂ	1	[EXC][EXE][EXK][EXN][OBT] [EXB/OBT]
14	26094-17091		PIN	ﾋﾟﾝ	1	[EXC][EXE][EXK][EXN][OBT] [EXB/OBT]
15	26094-17081		SPRING,CENTERING	ｽﾌﾟﾘﾝｸﾞ	4	[EXC][EXE][EXK][EXN][OBT] [EXB/OBT]
16	26314-17021		SPRING,FLAT	ｽﾌﾟﾘﾝｸﾞ	2	[EXC][EXE][EXK][EXN][OBT] [EXB/OBT]
17	NO PART NO.	*	RACE,BRG	ﾚｰｽ	2	[EXC][EXE][EXK][EXN][OBT] [EXB/OBT]
18	NO PART NO.	*	BRG,THRUST,NEEDLE	ﾍﾞｱﾘﾝｸﾞ	1	[EXC][EXE][EXK][EXN][OBT] [EXB/OBT]
19	NO PART NO.	#*	O-RING	Oﾘﾝｸﾞ	1	[EXC][EXE][EXK][EXN][OBT] [EXB/OBT]
20	529F2-42611	#*	SEAL,OIL	ｼｰﾙ	1	[EXC][EXE][EXK][EXN][OBT] [EXB/OBT]
21	NO PART NO.	#*	SEAL,DUST	ｼｰﾙ	1	[EXC][EXE][EXK][EXN][OBT] [EXB/OBT]
22	26094-17001		RING,RETAINING	ﾘﾝｸﾞ	1	[EXC][EXE][EXK][EXN][OBT] [EXB/OBT]

FIG.94 ORBITROL [EXC][EXE][EXK][EXN][OBT]

(F5024130) オービットロール

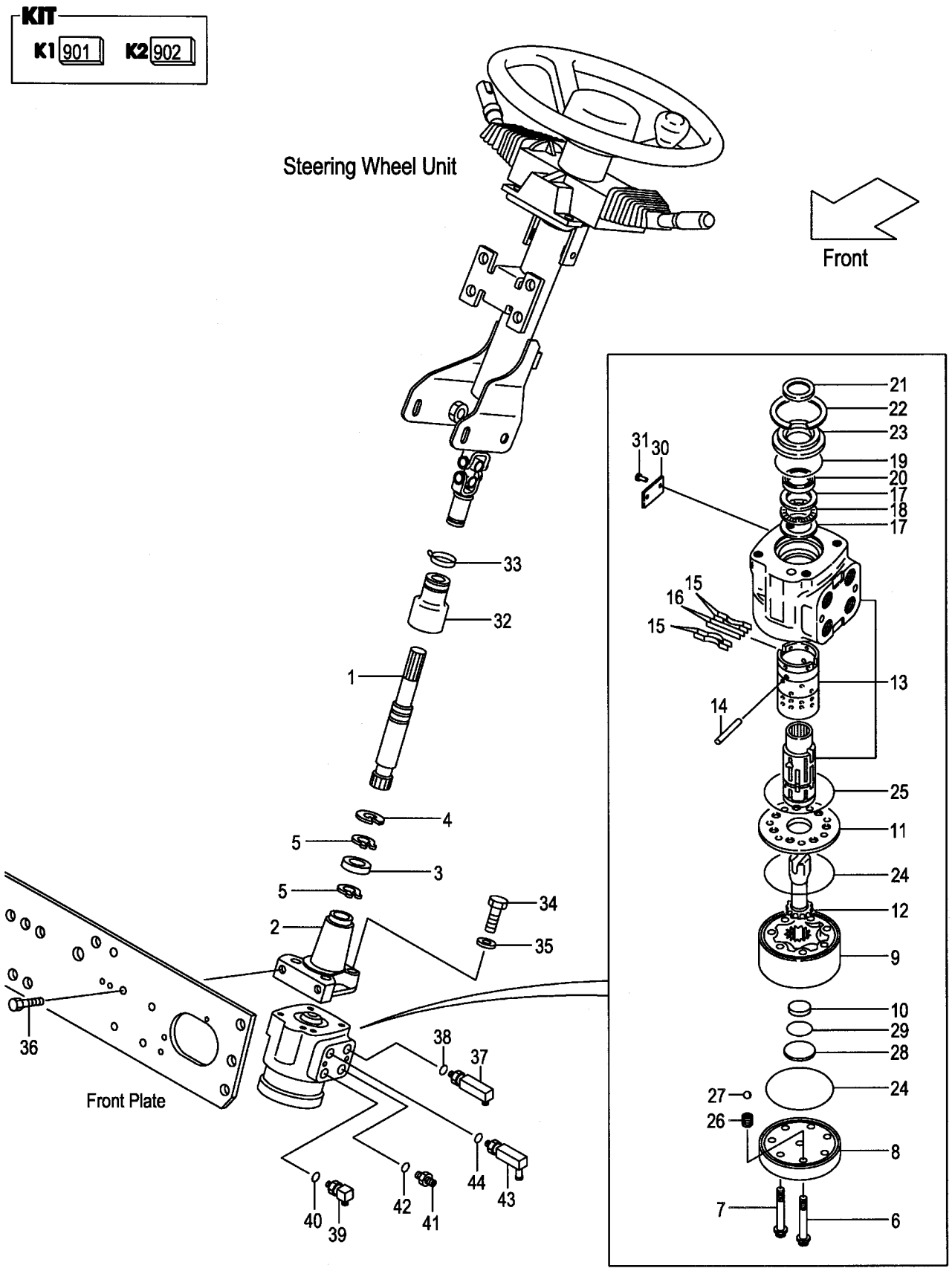

A:FG20C6 FG20T6 FG25C6 FG25T6:1-65449
B:FD20C6 FD20T6 FD25C6 FD25T6:1-83941

Item No	Part No.	Mark	Description		Req'd	Remarks : Serial No.
23	26314-17001		BUSHING,SEAL-GROUND	ﾌﾞｯｼﾝｸﾞ	1	[EXC][EXE][EXK][EXN][OBT] [EXB/OBT]
24	NO PART NO.	#*	O-RING	Oﾘﾝｸﾞ	2	[EXC][EXE][EXK][EXN][OBT] [EXB/OBT]
25	NO PART NO.	#*	O-RING	Oﾘﾝｸﾞ	1	[EXC][EXE][EXK][EXN][OBT] [EXB/OBT]
26	NO PART NO.		SCREW,ADAPTER	ｽｸﾘｭ	1	[EXC][EXE][EXK][EXN][OBT] [EXB/OBT]
27	524W2-42651		BALL	ﾎﾞｰﾙ	1	[EXC][EXE][EXK][EXN][OBT] [EXB/OBT]
28	514A2-42611		PLUG	ﾌﾟﾗｸﾞ	1	[EXC][EXE][EXK][EXN][OBT] [EXB/OBT]
29	514A2-42621	#*	O-RING	Oﾘﾝｸﾞ	1	[EXC][EXE][EXK][EXN][OBT] [EXB/OBT]
30	NO PART NO.	#	PLATE,NAME	ﾌﾟﾚｰﾄ	1	[EXC][EXE][EXK][EXN][OBT] [EXB/OBT]
31	NO PART NO.	#	RIVET	ﾘﾍﾞｯﾄ	2	[EXC][EXE][EXK][EXN][OBT] [EXB/OBT]
32	239A4-12211		BOOT,GEAR-BOX	ﾌﾞｰﾂ	1	[EXC][EXE][EXK][EXN][OBT] [EXB/OBT]
33	04913-11200		BAND	ﾊﾞﾝﾄﾞ	1	[EXC][EXE][EXK][EXN][OBT] [EXB/OBT]
34	80110-00628		BOLT	ﾎﾞﾙﾄ	4	[EXC][EXE][EXK][EXN][OBT] [EXB/OBT]
35	80430-00006		WASHER	ﾜｯｼｬ	4	[EXC][EXE][EXK][EXN][OBT] [EXB/OBT]
36	216G4-12251		BOLT	ﾎﾞﾙﾄ	2	[EXC][EXE][EXK][EXN][OBT] [EXB/OBT]
A2	23457-60301		ELBOW-ASSY	ｴﾙﾎﾞｱｯｾﾝ	1	[EXC][EXE][EXK][EXN][OBT] [EXB/OBT] INC.37,38
37	NO PART NO.	#	ELBOW	ｴﾙﾎﾞ	1	[EXC][EXE][EXK][EXN][OBT] [EXB/OBT]
38	89140-00006		O-RING	Oﾘﾝｸﾞ	1	[EXC][EXE][EXK][EXN][OBT] [EXB/OBT]
A3	23457-60311		ELBOW-ASSY	ｴﾙﾎﾞｱｯｾﾝ	1	[EXC][EXE][EXK][EXN][OBT] [EXB/OBT] INC.39,40
39	NO PART NO.	#	ELBOW	ｴﾙﾎﾞ	1	[EXC][EXE][EXK][EXN][OBT] [EXB/OBT]
40	89140-00006		O-RING	Oﾘﾝｸﾞ	1	[EXC][EXE][EXK][EXN][OBT] [EXB/OBT]
A4	22197-60231		NIPPLE-ASSY	ﾆｯﾌﾟﾙｱｯｾﾝ	1	[EXC][EXE][EXK][EXN][OBT] [EXB/OBT] INC.41,42
41	NO PART NO.	#	NIPPLE	ﾆｯﾌﾟﾙ	1	[EXC][EXE][EXK][EXN][OBT] [EXB/OBT]
42	89140-00006		O-RING	Oﾘﾝｸﾞ	1	[EXC][EXE][EXK][EXN][OBT] [EXB/OBT]
A5	516G2-40451		ELBOW-ASSY	ｴﾙﾎﾞｱｯｾﾝ	1	[EXC][EXE][EXK][EXN][OBT] [EXB/OBT] INC.43,44
43	NO PART NO.	#	ELBOW	ｴﾙﾎﾞ	1	[EXC][EXE][EXK][EXN][OBT] [EXB/OBT]

FIG.94 ORBITROL [EXC][EXE][EXK][EXN][OBT]

(F5024130) オービットロール

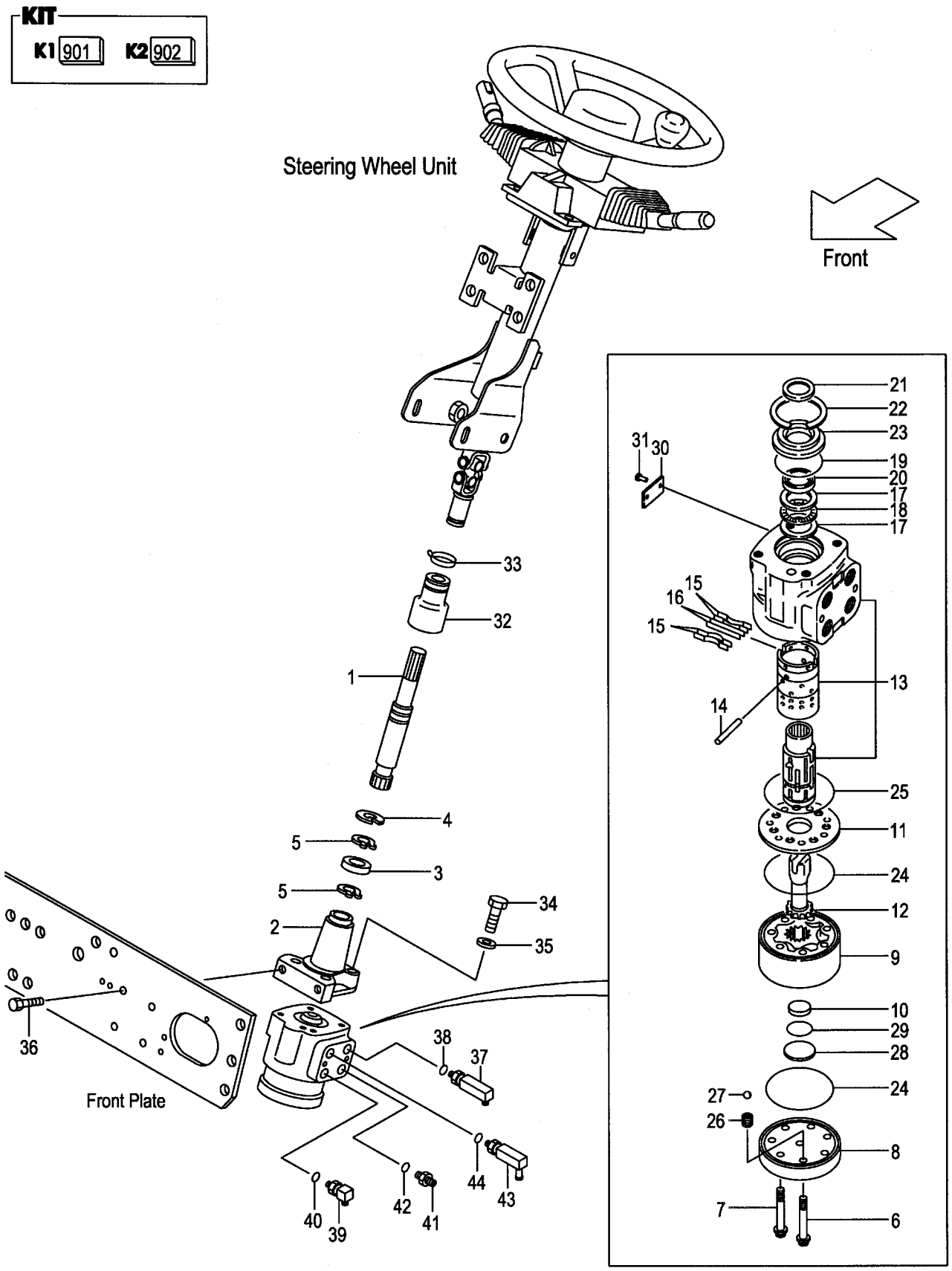

A:FG20C6 FG20T6 FG25C6 FG25T6:1-65449
B:FD20C6 FD20T6 FD25C6 FD25T6:1-83941

Item No	Part No.	Mark	Description	Req'd	Remarks : Serial No.
44	89140-00006		O-RING Oﾘﾝｸﾞ	1	[EXC][EXE][EXK][EXN][OBT] [EXB/OBT]

FIG.94A ORBITROL [EXC][EXE][EXK][EXN][OBT]

(F5024131) オービットロール

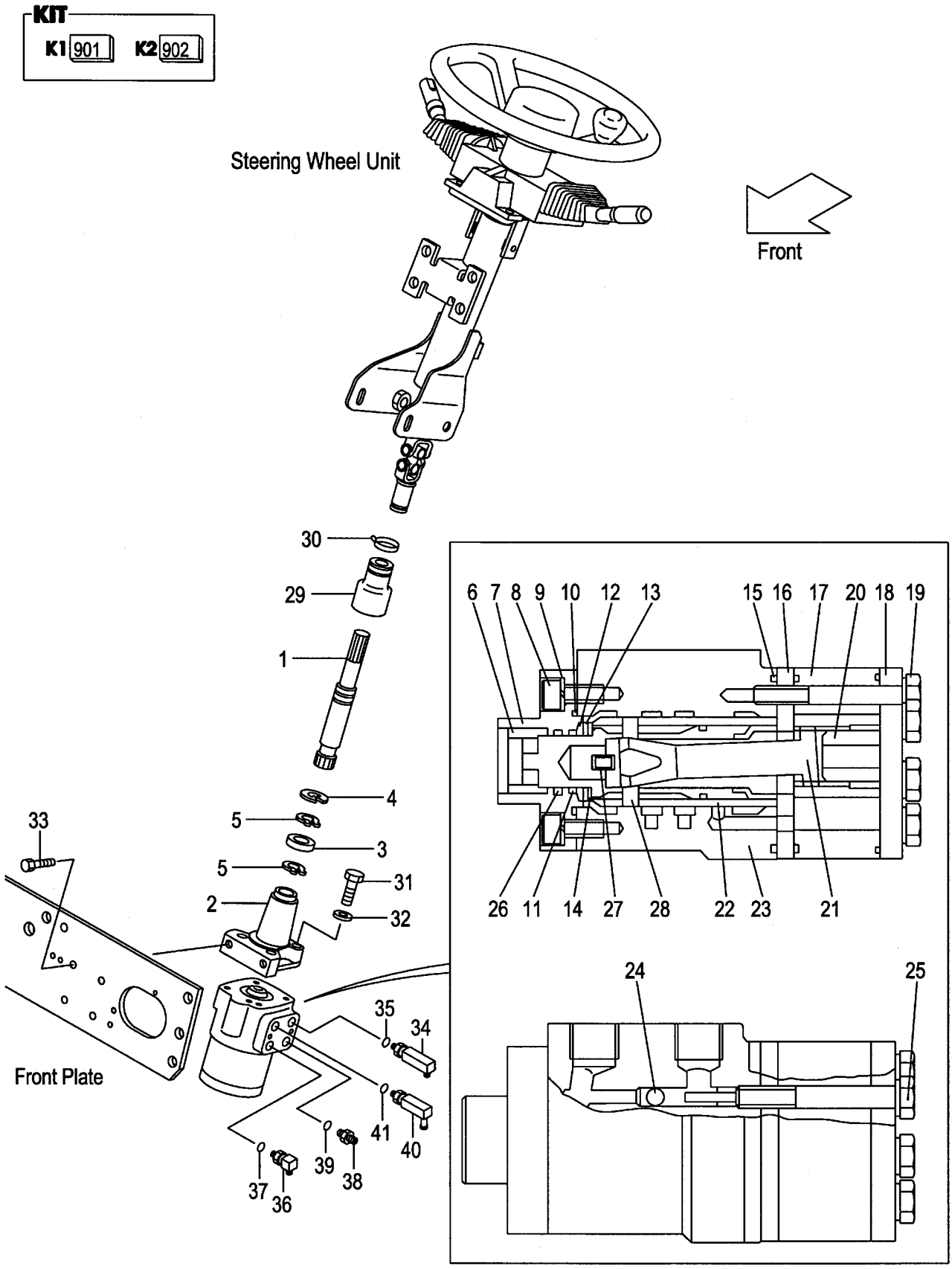

A:FG20C6 FG20T6 FG25C6 FG25T6:65450-
B:FD20C6 FD20T6 FD25C6 FD25T6:83942-

Item No	Part No.	Mark	Description		Req'd	Remarks : Serial No.
1	539A2-42001		SHAFT,HANDLE	ｼｬﾌﾄ	1	[EXC][EXE][EXK][EXN][OBT] [EXB/OBT]
2	539A2-42011		FLANGE	ﾌﾗﾝｼﾞ	1	[EXC][EXE][EXK][EXN][OBT] [EXB/OBT]
3	03010-06904		BRG,BALL	ﾍﾞｱﾘﾝｸﾞ	1	[EXC][EXE][EXK][EXN][OBT] [EXB/OBT]
4	02110-00037		RING,SNAP	ｽﾅｯﾌﾟﾘﾝｸﾞ	1	[EXC][EXE][EXK][EXN][OBT] [EXB/OBT]
5	02100-00020		RING,SNAP	ｽﾅｯﾌﾟﾘﾝｸﾞ	2	[EXC][EXE][EXK][EXN][OBT] [EXB/OBT]
A1	HC32G4-10101		UNIT-ASSY,ORBITROL	ｵｰﾋﾞｯﾄﾛｰﾙﾕﾆｯﾄｱｯｾﾝ	1	[EXC][EXE][EXK][EXN][OBT] [EXB/OBT] INC.6-28
901	HC516G2-42411	K1	KIT,SEAL	ｼｰﾙｷｯﾄ	1	[EXC][EXE][EXK][EXN][OBT] [EXB/OBT] INC.10,11,15,26
902	HC26094-17021	K2	KIT,BRG,NEEDLE	ﾆｰﾄﾞﾙﾍﾞｱﾘﾝｸﾞｷｯﾄ	1	[EXC][EXE][EXK][EXN][OBT] [EXB/OBT] INC.12-14
6	NO PART NO.	#	BUSHING	ﾌﾞｯｼﾝｸﾞ	1	[EXC][EXE][EXK][EXN][OBT] [EXB/OBT]
7	NO PART NO.	#	CAP,FRONT	ｷｬｯﾌﾟ	1	[EXC][EXE][EXK][EXN][OBT] [EXB/OBT]
8	NO PART NO.	#	BOLT	ﾎﾞﾙﾄ	4	[EXC][EXE][EXK][EXN][OBT] [EXB/OBT]
9	NO PART NO.	#	WASHER	ﾜｯｼｬ	4	[EXC][EXE][EXK][EXN][OBT] [EXB/OBT]
10	NO PART NO.	#*	O-RING	Oﾘﾝｸﾞ	1	[EXC][EXE][EXK][EXN][OBT] [EXB/OBT]
11	NO PART NO.	#*	SEAL,OIL	ｼｰﾙ	1	[EXC][EXE][EXK][EXN][OBT] [EXB/OBT]
12	NO PART NO.	#*	RACE,BRG	ﾚｰｽ	1	[EXC][EXE][EXK][EXN][OBT] [EXB/OBT]
13	NO PART NO.	#*	BRG,NEEDLE	ﾍﾞｱﾘﾝｸﾞ	1	[EXC][EXE][EXK][EXN][OBT] [EXB/OBT]
14	NO PART NO.	#*	RACE,BRG	ﾚｰｽ	1	[EXC][EXE][EXK][EXN][OBT] [EXB/OBT]
15	NO PART NO.	#*	O-RING	Oﾘﾝｸﾞ	1	[EXC][EXE][EXK][EXN][OBT] [EXB/OBT]
16	NO PART NO.	#	SPACER	ｽﾍﾟｰｻ	1	[EXC][EXE][EXK][EXN][OBT] [EXB/OBT]
17	NO PART NO.	#	GEROTOR	ｼﾞﾛｰﾀ	1	[EXC][EXE][EXK][EXN][OBT] [EXB/OBT]
18	NO PART NO.	#	CAP,END	ｷｬｯﾌﾟ	1	[EXC][EXE][EXK][EXN][OBT] [EXB/OBT]
19	NO PART NO.	#	BOLT	ﾎﾞﾙﾄ	6	[EXC][EXE][EXK][EXN][OBT] [EXB/OBT]
20	NO PART NO.	#	SPACER	ｽﾍﾟｰｻ	1	[EXC][EXE][EXK][EXN][OBT] [EXB/OBT]
21	NO PART NO.	#	SHAFT,DRIVE	ｼｬﾌﾄ	1	[EXC][EXE][EXK][EXN][OBT] [EXB/OBT]
22	NO PART NO.	#	SLEEVE	ｽﾘｰﾌﾞ	1	[EXC][EXE][EXK][EXN][OBT] [EXB/OBT]

FIG.94A ORBITROL [EXC][EXE][EXK][EXN][OBT]

(F5024131) オービットロール

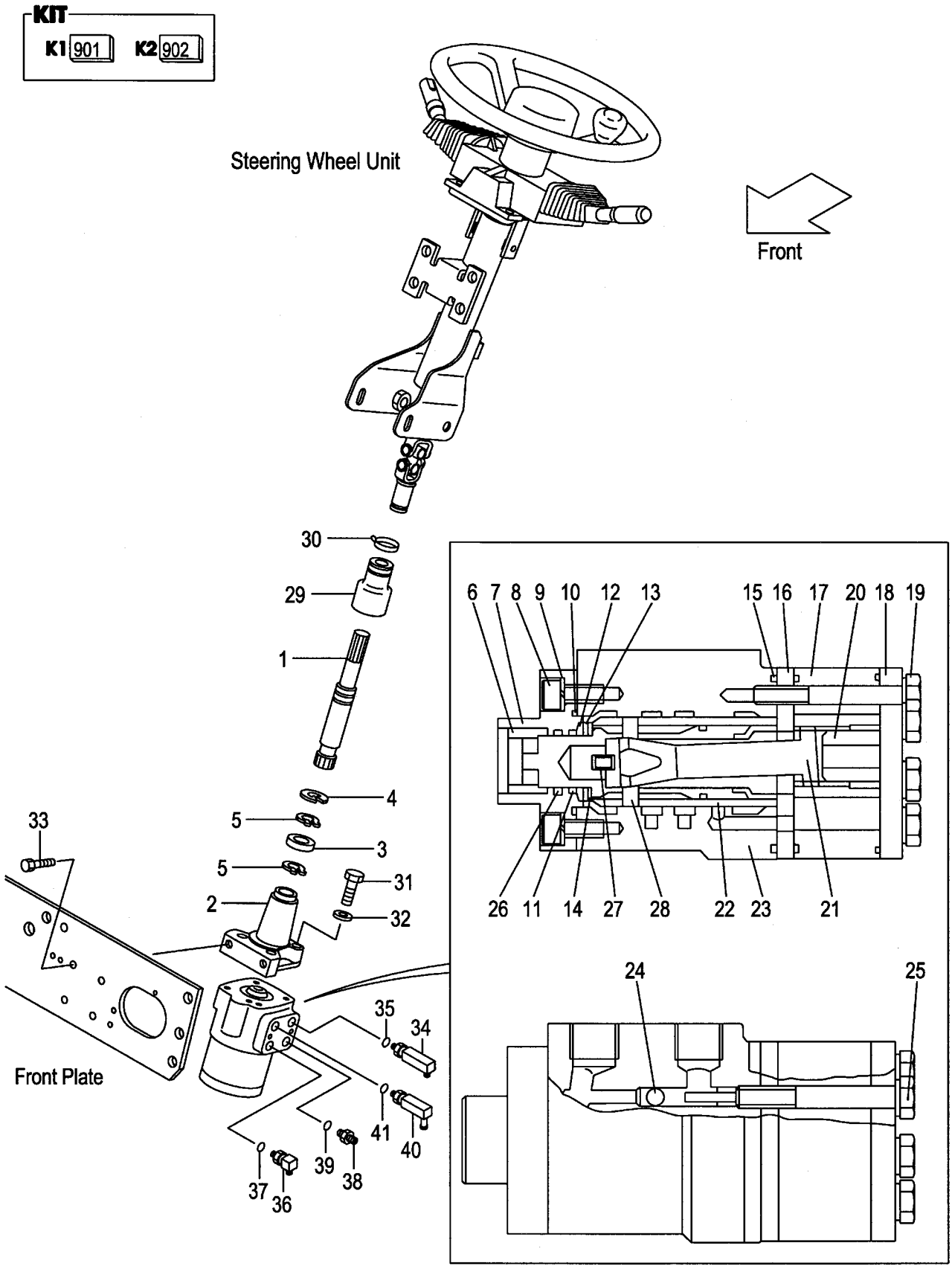

A:FG20C6 FG20T6 FG25C6 FG25T6:65450-
B:FD20C6 FD20T6 FD25C6 FD25T6:83942-

Item No	Part No.	Mark	Description		Req'd	Remarks : Serial No.
23	NO PART NO.	#	HOUSING	ﾊｳｼﾞﾝｸﾞ	1	[EXC][EXE][EXK][EXN][OBT] [EXB/OBT]
24	NO PART NO.	#	BALL,STEEL	ﾎﾞｰﾙ	1	[EXC][EXE][EXK][EXN][OBT] [EXB/OBT]
25	NO PART NO.	#	BOLT	ﾎﾞﾙﾄ	1	[EXC][EXE][EXK][EXN][OBT] [EXB/OBT]
26	NO PART NO.	#*	O-RING	Oﾘﾝｸﾞ	1	[EXC][EXE][EXK][EXN][OBT] [EXB/OBT]
27	NO PART NO.	#	SPRING	ｽﾌﾟﾘﾝｸﾞ	1	[EXC][EXE][EXK][EXN][OBT] [EXB/OBT]
28	NO PART NO.	#	PIN	ﾋﾟﾝ	1	[EXC][EXE][EXK][EXN][OBT] [EXB/OBT]
29	239A4-12211		BOOT,GEAR-BOX	ﾌﾞｰﾂ	1	[EXC][EXE][EXK][EXN][OBT] [EXB/OBT]
30	04913-11200		BAND	ﾊﾞﾝﾄﾞ	1	[EXC][EXE][EXK][EXN][OBT] [EXB/OBT]
31	80110-00628		BOLT	ﾎﾞﾙﾄ	4	[EXC][EXE][EXK][EXN][OBT] [EXB/OBT]
32	80430-00006		WASHER	ﾜｯｼｬ	4	[EXC][EXE][EXK][EXN][OBT] [EXB/OBT]
33	216G4-12251		BOLT	ﾎﾞﾙﾄ	2	[EXC][EXE][EXK][EXN][OBT] [EXB/OBT]
A2	23457-60301		ELBOW-ASSY	ｴﾙﾎﾞｱｯｾﾝ	1	[EXC][EXE][EXK][EXN][OBT] [EXB/OBT] INC.34,35
34	NO PART NO.	#	ELBOW	ｴﾙﾎﾞ	1	[EXC][EXE][EXK][EXN][OBT] [EXB/OBT]
35	89140-00006		O-RING	Oﾘﾝｸﾞ	1	[EXC][EXE][EXK][EXN][OBT] [EXB/OBT]
A3	23457-60311		ELBOW-ASSY	ｴﾙﾎﾞｱｯｾﾝ	1	[EXC][EXE][EXK][EXN][OBT] [EXB/OBT] INC.36,37
36	NO PART NO.	#	ELBOW	ｴﾙﾎﾞ	1	[EXC][EXE][EXK][EXN][OBT] [EXB/OBT]
37	89140-00006		O-RING	Oﾘﾝｸﾞ	1	[EXC][EXE][EXK][EXN][OBT] [EXB/OBT]
A4	22197-60231		NIPPLE-ASSY	ﾆｯﾌﾟﾙｱｯｾﾝ	1	[EXC][EXE][EXK][EXN][OBT] [EXB/OBT] INC.38,39
38	NO PART NO.	#	NIPPLE	ﾆｯﾌﾟﾙ	1	[EXC][EXE][EXK][EXN][OBT] [EXB/OBT]
39	89140-00006		O-RING	Oﾘﾝｸﾞ	1	[EXC][EXE][EXK][EXN][OBT] [EXB/OBT]
A5	516G2-40451		ELBOW-ASSY	ｴﾙﾎﾞｱｯｾﾝ	1	[EXC][EXE][EXK][EXN][OBT] [EXB/OBT] INC.40,41
40	NO PART NO.	#	ELBOW	ｴﾙﾎﾞ	1	[EXC][EXE][EXK][EXN][OBT] [EXB/OBT]
41	89140-00006		O-RING	Oﾘﾝｸﾞ	1	[EXC][EXE][EXK][EXN][OBT] [EXB/OBT]

FIG.95 DRAG LINK
(F5024210) ﾄﾞﾗｯｸﾞﾘﾝｸ

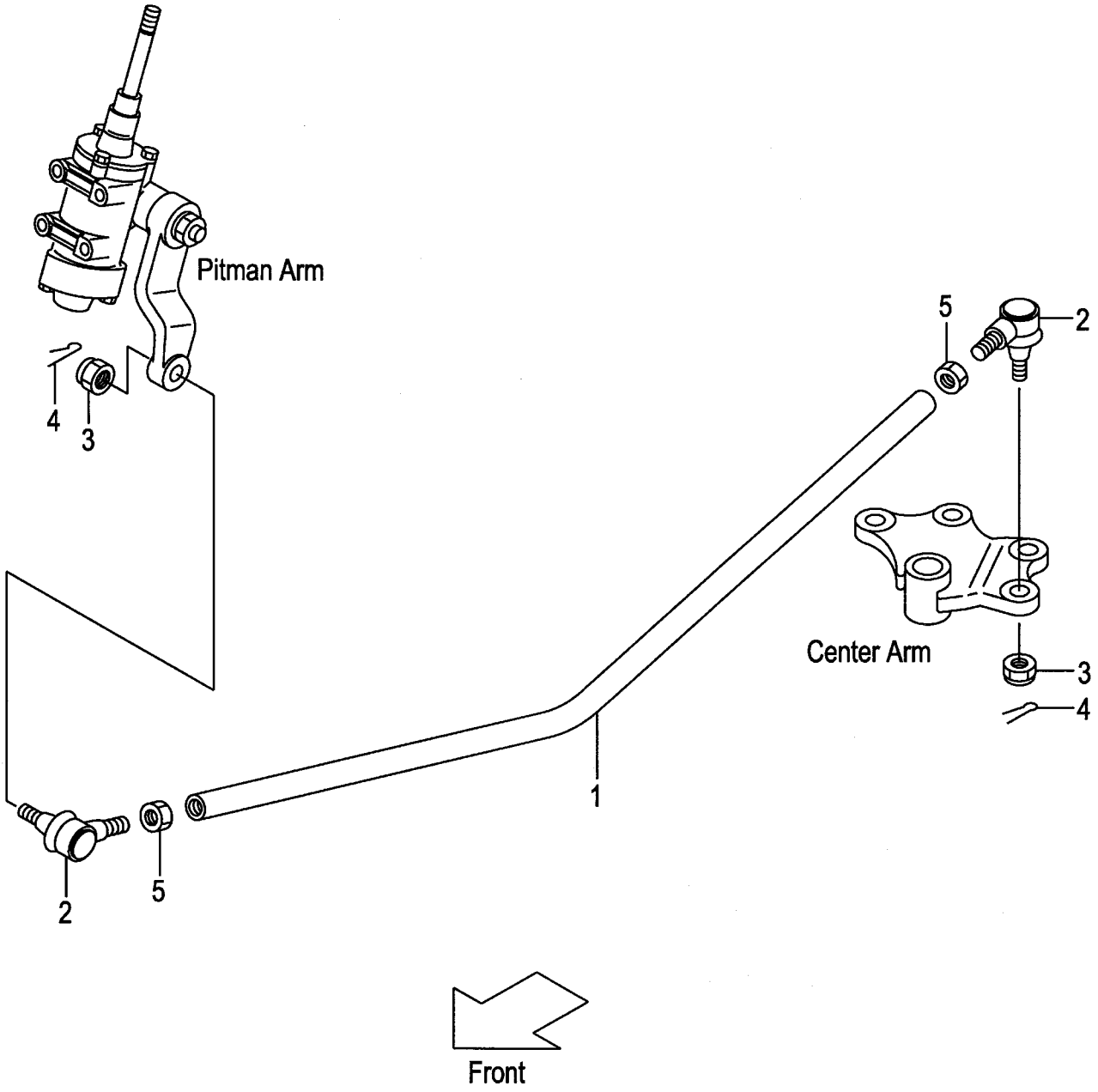

A:FG20C17 FG20T17 FG25C17 FG25T17 D:FD20C17 FD20T17 FD25C17 FD25T17
B:FG20C6 FG20T6 FG25C6 FG25T6 E:FD20C6 FD20T6 FD25C6 FD25T6
C:FG20W6 FG25W6 F:FD20W6 FD25W6

FIG.95
(F5024210)

Item No	Part No.	Mark	Description		Req'd	Remarks : Serial No.
1	234A4-22101		LINK,DRAG	ﾘﾝｸ	1	(WITHOUT EXC,EXE,EXK,EXN, OBT,EXB/OBT)
-	234A4-22101		LINK,DRAG	ﾘﾝｸ	1	B,E [EXC/PSS][EXE/PSS][EXK/PSS] [EXN/PSS]
A1	24234-30551		END-ASSY,ROD,RH	ｴﾝﾄﾞｱｯｾﾝ	2	(WITHOUT EXC,EXE,EXK,EXN, OBT,EXB/OBT) INC.2-4
-	24234-30551		END-ASSY,ROD,RH	ｴﾝﾄﾞｱｯｾﾝ	2	B,E [EXC/PSS][EXE/PSS][EXK/PSS] [EXN/PSS] INC.2-4
2	NO PART NO.	#	END,ROD,RH	ｴﾝﾄﾞ	2	(WITHOUT EXC,EXE,EXK,EXN, OBT,EXB/OBT)
-	NO PART NO.	#	END,ROD,RH	ｴﾝﾄﾞ	2	B,E [EXC/PSS][EXE/PSS][EXK/PSS] [EXN/PSS]
3	01412-10016		NUT	ﾅｯﾄ	2	(WITHOUT EXC,EXE,EXK,EXN, OBT,EXB/OBT)
-	01412-10016		NUT	ﾅｯﾄ	2	B,E [EXC/PSS][EXE/PSS][EXK/PSS] [EXN/PSS]
4	02200-32032		PIN,COTTER	ﾋﾟﾝ	2	(WITHOUT EXC,EXE,EXK,EXN, OBT,EXB/OBT)
-	02200-32032		PIN,COTTER	ﾋﾟﾝ	2	B,E [EXC/PSS][EXE/PSS][EXK/PSS] [EXN/PSS]
5	01402-00022		NUT	ﾅｯﾄ	2	(WITHOUT EXC,EXE,EXK,EXN, OBT,EXB/OBT)
-	01402-00022		NUT	ﾅｯﾄ	2	B,E [EXC/PSS][EXE/PSS][EXK/PSS] [EXN/PSS]

FIG.96 STEERING AXLE

(F5024310) ステアリング゛アクスル

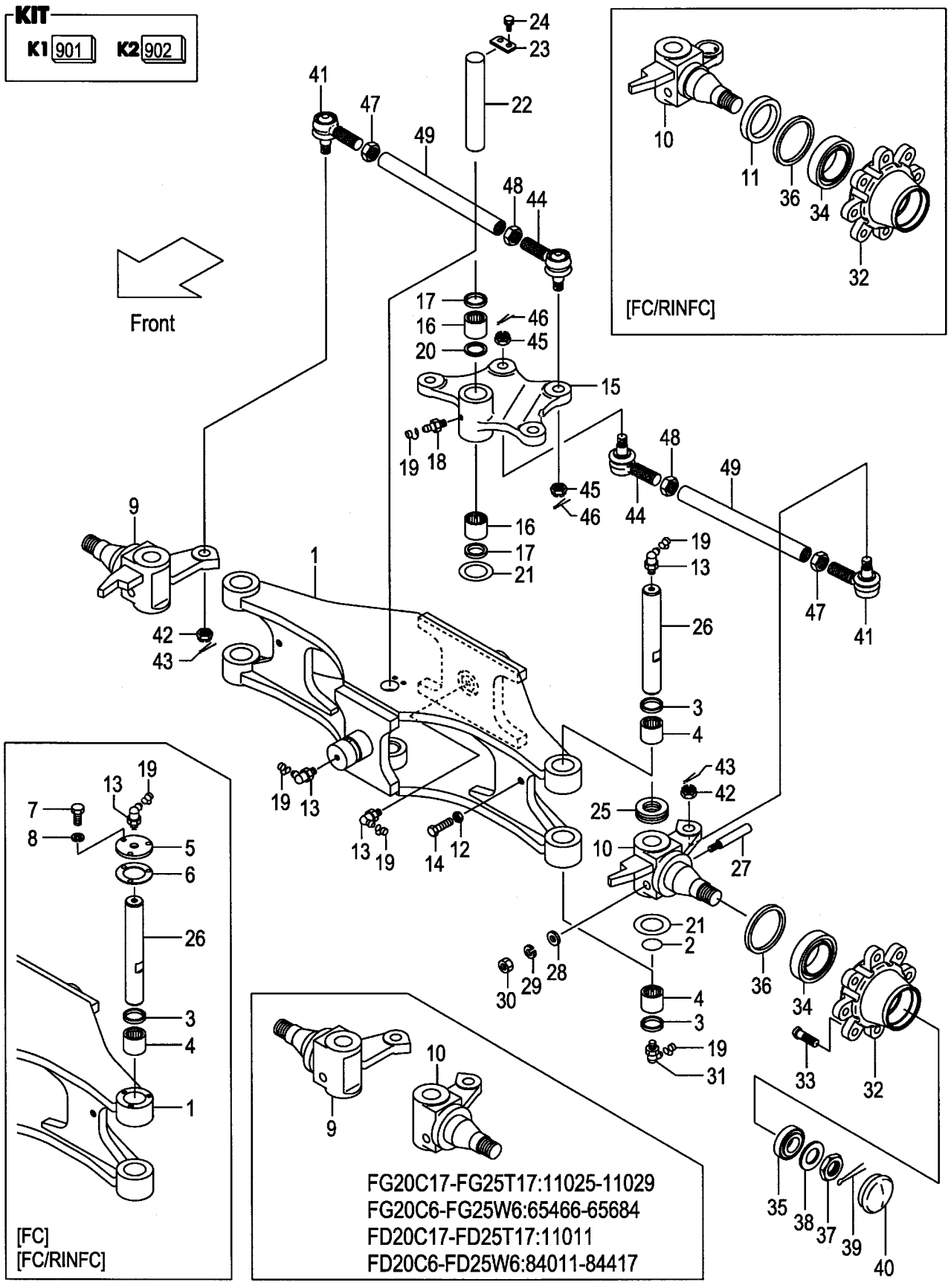

A:FG20C17 FG20T17 FG25C17 FG25T17 C:FD20C17 FD20T17 FD25C17 FD25T17
B:FG20C6 FG20T6 FG25C6 FG25T6 FG20W6 FG25W6 D:FD20C6 FD20T6 FD25C6 FD25T6 FD20W6 FD25W6

Item No	Part No.	Mark	Description		Req'd	Remarks : Serial No.
A1	234A4-30001		AXLE-ASSY,STEERING	ｽﾃｱﾘﾝｸﾞｱｸｽﾙｱｯｾﾝ	1	A:1-11024 B:1-65465 C:1-11010 D:1-84010 INC.1-4,9,10,12-49
-	239A4-30131		AXLE-ASSY,STEERING	ｽﾃｱﾘﾝｸﾞｱｸｽﾙｱｯｾﾝ	1	A:11025-11029 B:65466-65684 C:11011-11011 D:84011-84417 INC.1-4,9,10,12-49
-	234A4-30001		AXLE-ASSY,STEERING	ｽﾃｱﾘﾝｸﾞｱｸｽﾙｱｯｾﾝ	1	A:11030- B:65685- C:11012- D:84418- INC.1-4,9,10,12-49
-	534A3-70021		AXLE-ASSY,STEERING	ｽﾃｱﾘﾝｸﾞｱｸｽﾙｱｯｾﾝ	1	A:1-11024 B:1-65465 C:1-11010 D:1-84010 [FC] INC.1-10,12-49
-	539A3-70021		AXLE-ASSY,STEERING	ｽﾃｱﾘﾝｸﾞｱｸｽﾙｱｯｾﾝ	1	A:11025-11029 B:65466-65684 C:11011-11011 D:84011-84417 [FC] INC.1-10,12-49
-	534A3-70021		AXLE-ASSY,STEERING	ｽﾃｱﾘﾝｸﾞｱｸｽﾙｱｯｾﾝ	1	A:11030- B:65685- C:11012- D:84418- [FC] INC.1-10,12-49
-	534A3-70031		AXLE-ASSY,STEERING	ｽﾃｱﾘﾝｸﾞｱｸｽﾙｱｯｾﾝ	1	A:1-11024 B:1-65465 C:1-11010 D:1-84010 [FC/RINFC] INC.1-49
-	539A3-70031		AXLE-ASSY,STEERING	ｽﾃｱﾘﾝｸﾞｱｸｽﾙｱｯｾﾝ	1	A:11025-11029 B:65466-65684 C:11011-11011 D:84011-84417 [FC/RINFC] INC.1-49
-	534A3-70031		AXLE-ASSY,STEERING	ｽﾃｱﾘﾝｸﾞｱｸｽﾙｱｯｾﾝ	1	A:11030- B:65685- C:11012- D:84418- [FC/RINFC] INC.1-49
901	215E4-39801	K1	KIT,REPAIR	ﾘﾍﾟｱｷｯﾄ	1	INC.2-4,13,21,25,27-30
902	24454-39812	K2	KIT,REPAIR	ﾘﾍﾟｱｷｯﾄ	1	INC.16-18,20,21,23,24

FIG.96 STEERING AXLE

(F5024310) ステアリング゛アクスル

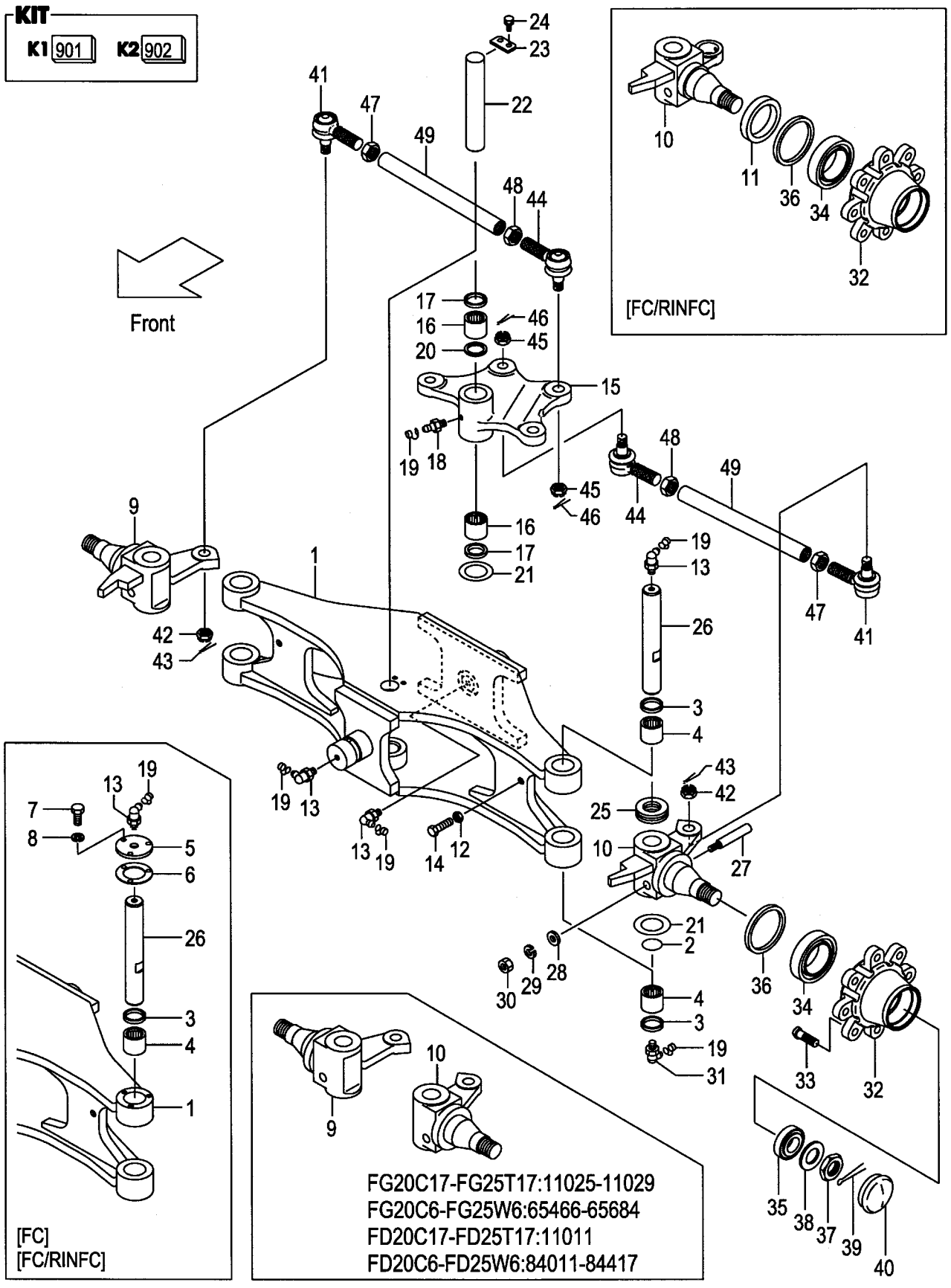

A:FG20C17 FG20T17 FG25C17 FG25T17 C:FD20C17 FD20T17 FD25C17 FD25T17
B:FG20C6 FG20T6 FG25C6 FG25T6 FG20W6 FG25W6 D:FD20C6 FD20T6 FD25C6 FD25T6 FD20W6 FD25W6

Item No	Part No.	Mark	Description		Req'd	Remarks : Serial No.
1	234A4-30111		AXLE,STEERING	ｱｸｽﾙ	1	A:1-11024 B:1-65465 C:1-11010 D:1-84010
-	239A4-30251		AXLE,STEERING	ｱｸｽﾙ	1	A:11025-11029 B:65466-65684 C:11011-11011 D:84011-84417
-	234A4-30111		AXLE,STEERING	ｱｸｽﾙ	1	A:11030- B:65685- C:11012- D:84418-
-	534A3-70101		AXLE,STEERING	ｱｸｽﾙ	1	A:1-11024 B:1-65465 C:1-11010 D:1-84010 [FC][FC/RINFC]
-	539A3-70101		AXLE,STEERING	ｱｸｽﾙ	1	A:11025-11029 B:65466-65684 C:11011-11011 D:84011-84417 [FC][FC/RINFC]
-	534A3-70101		AXLE,STEERING	ｱｸｽﾙ	1	A:11030- B:65685- C:11012- D:84418- [FC][FC/RINFC]
2	23654-32161	*	O-RING	Oﾘﾝｸﾞ	2	
3	214A4-32161	*	SEAL,DUST	ｼｰﾙ	4	
4	03146-13201	*	BRG,NEEDLE	ﾍﾞｱﾘﾝｸﾞ	4	
5	514A3-72052		PLATE,CAP	ﾌﾟﾚｰﾄ	2	[FC][FC/RINFC]
6	514A3-72062		PACKING	ﾊﾟｯｷﾝｸﾞ	2	[FC][FC/RINFC]
7	01141-06012		BOLT	ﾎﾞﾙﾄ	6	[FC][FC/RINFC]
8	02010-10006		WASHER	ﾜｯｼｬ	6	[FC][FC/RINFC]
9	234A4-32261		KNUCKLE,RH	ﾅｯｸﾙ	1	A:1-11024 B:1-65465 C:1-11010 D:1-84010
-	239A4-32101		KNUCKLE,RH	ﾅｯｸﾙ	1	A:11025-11029 B:65466-65684 C:11011-11011 D:84011-84417
-	234A4-32261		KNUCKLE,RH	ﾅｯｸﾙ	1	A:11030- B:65685- C:11012- D:84418-

FIG.96 STEERING AXLE

(F5024310) ステアリング゛アクスル

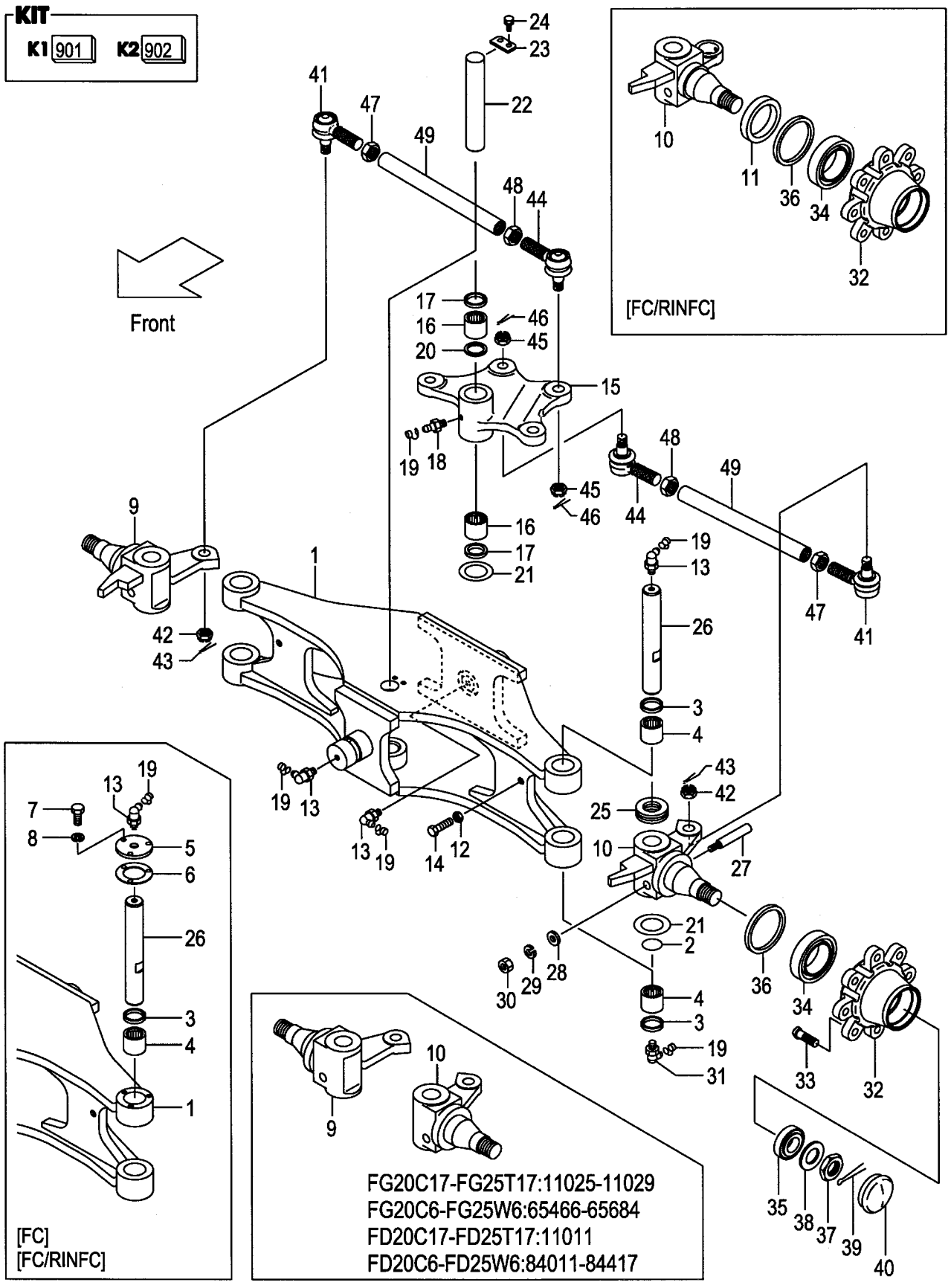

A:FG20C17 FG20T17 FG25C17 FG25T17 C:FD20C17 FD20T17 FD25C17 FD25T17
B:FG20C6 FG20T6 FG25C6 FG25T6 FG20W6 FG25W6 D:FD20C6 FD20T6 FD25C6 FD25T6 FD20W6 FD25W6

Item No	Part No.	Mark	Description		Req'd	Remarks : Serial No.
-	534A3-72111		KNUCKLE,RH	ﾅｯｸﾙ	1	A:1-11024 B:1-65465 C:1-11010 D:1-84010 [FC/RINFC]
-	539A3-72111		KNUCKLE,RH	ﾅｯｸﾙ	1	A:11025-11029 B:65466-65684 C:11011-11011 D:84011-84417 [FC/RINFC]
-	534A3-72111		KNUCKLE,RH	ﾅｯｸﾙ	1	A:11030- B:65685- C:11012- D:84418- [FC/RINFC]
10	234A4-32271		KNUCKLE,LH	ﾅｯｸﾙ	1	A:1-11024 B:1-65465 C:1-11010 D:1-84010
-	239A4-32111		KNUCKLE,LH	ﾅｯｸﾙ	1	A:11025-11029 B:65466-65684 C:11011-11011 D:84011-84417
-	234A4-32271		KNUCKLE,LH	ﾅｯｸﾙ	1	A:11030- B:65685- C:11012- D:84418-
-	534A3-72121		KNUCKLE,LH	ﾅｯｸﾙ	1	A:1-11024 B:1-65465 C:1-11010 D:1-84010 [FC/RINFC]
-	539A3-72121		KNUCKLE,LH	ﾅｯｸﾙ	1	A:11025-11029 B:65466-65684 C:11011-11011 D:84011-84417 [FC/RINFC]
-	534A3-72121		KNUCKLE,LH	ﾅｯｸﾙ	1	A:11030- B:65685- C:11012- D:84418- [FC/RINFC]
11	514A3-72211		SEAT,OIL-SEAL	ｼｰﾄ	2	[FC/RINFC]
12	01402-00012		NUT	ﾅｯﾄ	2	
13	04901-00190	*	FITTING	ﾌｨｯﾃｨﾝｸﾞ	4	
14	01100-12030		BOLT	ﾎﾞﾙﾄ	2	
15	24454-30512		ARM,CENTER	ｱｰﾑ	1	
16	03146-13201	*	BRG,NEEDLE	ﾍﾞｱﾘﾝｸﾞ	2	
17	23654-32081	*	SEAL,DUST	ｼｰﾙ	2	
18	04901-00100	*	FITTING	ﾌｨｯﾃｨﾝｸﾞ	1	

FIG.96 STEERING AXLE

(F5024310) ステアリング゛アクスル

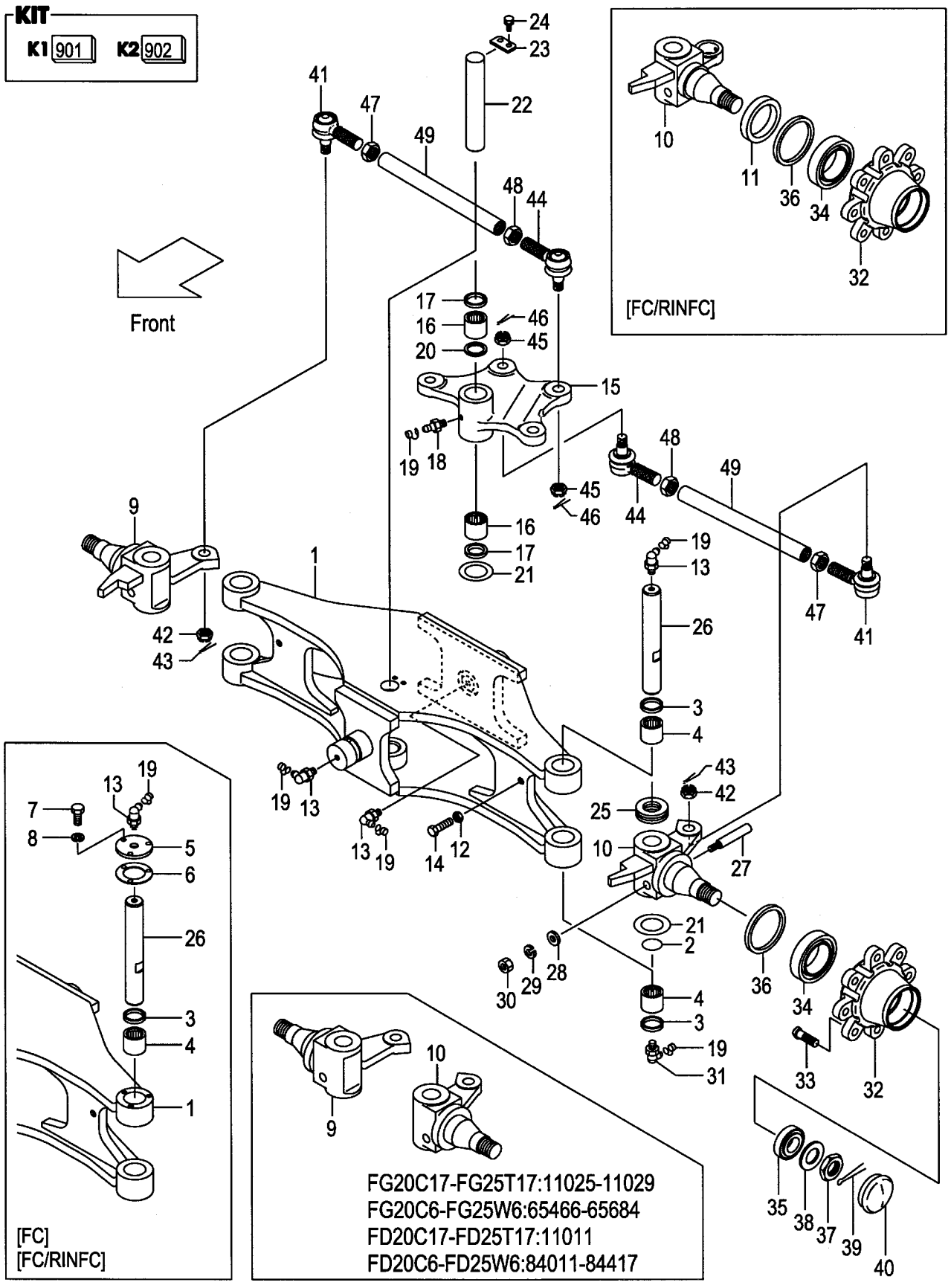

A:FG20C17 FG20T17 FG25C17 FG25T17 C:FD20C17 FD20T17 FD25C17 FD25T17
B:FG20C6 FG20T6 FG25C6 FG25T6 FG20W6 FG25W6 D:FD20C6 FD20T6 FD25C6 FD25T6 FD20W6 FD25W6

Item No	Part No.	Mark	Description		Req'd	Remarks : Serial No.
19	22199-12401		CAP,NIPPLE	ｷｬｯﾌﾟ	7	
20	24454-32391	*	SPACER	ｽﾍﾟｰｻ	1	
21	22214-30321	*	SHIM	ｼﾑ	7	
22	24454-32161		PIN,CENTER-ARM	ﾋﾟﾝ	1	
23	20224-30061	*	PLATE,SET	ﾌﾟﾚｰﾄ	1	
24	01183-08016	*	BOLT	ﾎﾞﾙﾄ	2	
25	03126-83201	*	BRG,THRUST	ﾍﾞｱﾘﾝｸﾞ	2	
26	24454-32232		KINGPIN	ｷﾝｸﾞﾋﾟﾝ	2	
-	514A3-72201		KINGPIN	ｷﾝｸﾞﾋﾟﾝ	2	[FC][FC/RINFC]
27	215E4-32341	*	PIN,LOCK	ﾋﾟﾝ	2	
28	02000-00010	*	WASHER	ﾜｯｼｬ	2	
29	02010-00010	*	WASHER	ﾜｯｼｬ	2	
30	01400-00010	*	NUT	ﾅｯﾄ	2	
31	04901-00191		FITTING	ﾌｨｯﾃｨﾝｸﾞ	2	
32	214A4-32041		HUB,REAR	ﾊﾌﾞ	2	
33	23654-32041		BOLT,HUB	ﾎﾞﾙﾄ	16	
34	03071-30211		BRG,TAPER-ROLLER	ﾍﾞｱﾘﾝｸﾞ	2	
35	03071-30207		BRG,TAPER-ROLLER	ﾍﾞｱﾘﾝｸﾞ	2	
36	03217-08501		SEAL,OIL	ｼｰﾙ	2	
37	01412-00030		NUT,CASTLE	ﾅｯﾄ	2	
38	02000-00030		WASHER	ﾜｯｼｬ	2	
39	02200-06055		PIN,COTTER	ﾋﾟﾝ	2	
40	214A4-32051		CAP	ｷｬｯﾌﾟ	2	
A2	24234-30551		END-ASSY,ROD,RH	ｴﾝﾄﾞｱｯｾﾝ	2	INC.41-43
41	NO PART NO.	#	END,ROD,RH	ｴﾝﾄﾞ	2	
42	01412-10016		NUT,CASTLE	ﾅｯﾄ	2	
43	02200-32032		PIN,COTTER	ﾋﾟﾝ	2	
A3	24234-30561		END-ASSY,ROD,LH	ｴﾝﾄﾞｱｯｾﾝ	2	INC.44-46
44	NO PART NO.	#	END,ROD,LH	ｴﾝﾄﾞ	2	
45	01412-10016		NUT,CASTLE	ﾅｯﾄ	2	
46	02200-32032		PIN,COTTER	ﾋﾟﾝ	2	
47	24234-32411		NUT,RH	ﾅｯﾄ	2	
48	24234-32421		NUT,LH	ﾅｯﾄ	2	
49	214A4-32131		ROD,TIE	ﾛｯﾄﾞ	2	

FIG.97 STEERING AXLE [EXC][EXE][EXK][EXN][OBT]

(F5024320) ステアリング゛アクスル

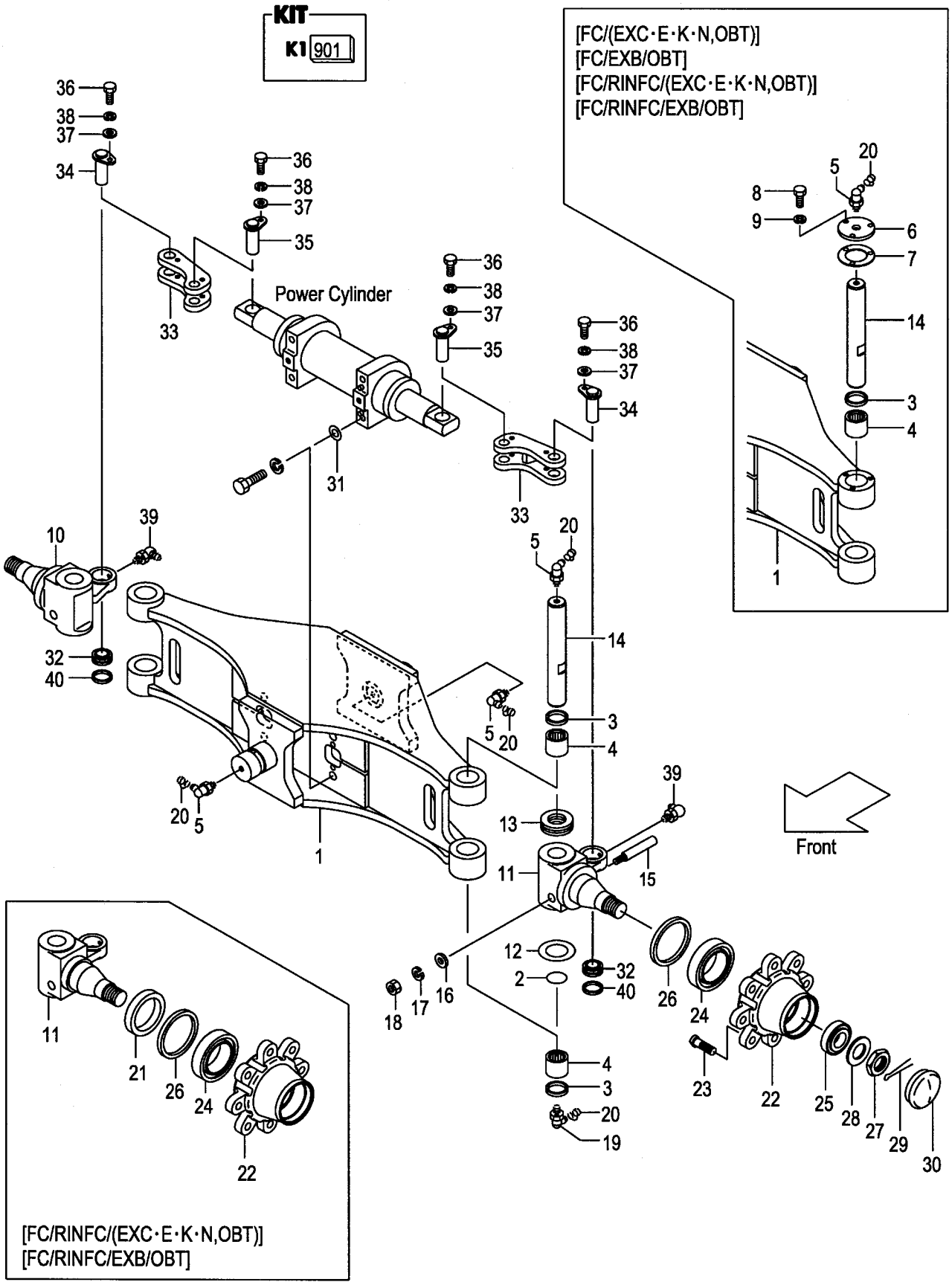

A:FG20C6 FG20T6 FG25C6 FG25T6
B:FD20C6 FD20T6 FD25C6 FD25T6

Item No	Part No.	Mark	Description		Req'd	Remarks : Serial No.
A1	533A2-40402		AXLE-ASSY,STEERING	ｽﾃｱﾘﾝｸﾞｱｸｽﾙｱｯｾﾝ	1	[EXC&E&K&N][OBT][EXB/OBT] INC.1-5,10-20,22-32
-	533A2-40502		AXLE-ASSY,STEERING	ｽﾃｱﾘﾝｸﾞｱｸｽﾙｱｯｾﾝ	1	[FC/EXC&E&K&N][FC/OBT] [FC/EXB/OBT] INC.1-20,22-32
-	533A2-40552		AXLE-ASSY,STEERING	ｽﾃｱﾘﾝｸﾞｱｸｽﾙｱｯｾﾝ	1	[FC/RINFC/EXC&E&K&N] INC.1-32
-	533A2-40552		AXLE-ASSY,STEERING	ｽﾃｱﾘﾝｸﾞｱｸｽﾙｱｯｾﾝ	1	[FC/RINFC/OBT] [FC/RINFC/EXB/OBT] INC.1-32
901	215E4-39801	K1	KIT,REPAIR	ﾘﾍﾟｱｷｯﾄ	1	[EXC&E&K&N][OBT][EXB/OBT] INC.2-5,12,13,15-19
1	514A2-40104		AXLE,STEERING	ｱｸｽﾙ	1	[EXC&E&K&N][OBT][EXB/OBT]
-	514A2-44022		AXLE,STEERING	ｱｸｽﾙ	1	[FC/EXC&E&K&N][FC/OBT] [FC/EXB/OBT]
-	514A2-44022		AXLE,STEERING	ｱｸｽﾙ	1	[FC/RINFC/EXC&E&K&N]
-	514A2-44022		AXLE,STEERING	ｱｸｽﾙ	1	[FC/RINFC/OBT] [FC/RINFC/EXB/OBT]
2	23654-32161	*	O-RING	Oﾘﾝｸﾞ	2	[EXC&E&K&N][OBT][EXB/OBT]
3	214A4-32161	*	SEAL,DUST	ｼｰﾙ	4	[EXC&E&K&N][OBT][EXB/OBT]
4	03146-13201	*	BRG,NEEDLE	ﾍﾞｱﾘﾝｸﾞ	4	[EXC&E&K&N][OBT][EXB/OBT]
5	04901-00190	*	FITTING	ﾌｨｯﾃｨﾝｸﾞ	4	[EXC&E&K&N][OBT][EXB/OBT]
6	514A3-72052		PLATE,CAP	ﾌﾟﾚｰﾄ	2	[FC/EXC&E&K&N][FC/OBT] [FC/EXB/OBT]
-	514A3-72052		PLATE,CAP	ﾌﾟﾚｰﾄ	2	[FC/RINFC/EXC&E&K&N]
-	514A3-72052		PLATE,CAP	ﾌﾟﾚｰﾄ	2	[FC/RINFC/OBT] [FC/RINFC/EXB/OBT]
7	514A3-72062		PACKING	ﾊﾟｯｷﾝｸﾞ	2	[FC/EXC&E&K&N][FC/OBT] [FC/EXB/OBT]
-	514A3-72062		PACKING	ﾊﾟｯｷﾝｸﾞ	2	[FC/RINFC/EXC&E&K&N]
-	514A3-72062		PACKING	ﾊﾟｯｷﾝｸﾞ	2	[FC/RINFC/OBT] [FC/RINFC/EXB/OBT]
8	01141-06012		BOLT	ﾎﾞﾙﾄ	6	[FC/EXC&E&K&N][FC/OBT] [FC/EXB/OBT]
-	01141-06012		BOLT	ﾎﾞﾙﾄ	6	[FC/RINFC/EXC&E&K&N]
-	01141-06012		BOLT	ﾎﾞﾙﾄ	6	[FC/RINFC/OBT] [FC/RINFC/EXB/OBT]
9	02010-10006		WASHER	ﾜｯｼｬ	6	[FC/EXC&E&K&N][FC/OBT] [FC/EXB/OBT]
-	02010-10006		WASHER	ﾜｯｼｬ	6	[FC/RINFC/EXC&E&K&N]
-	02010-10006		WASHER	ﾜｯｼｬ	6	[FC/RINFC/OBT] [FC/RINFC/EXB/OBT]
10	533A2-42032		KNUCKLE,RH	ﾅｯｸﾙ	1	[EXC&E&K&N][OBT][EXB/OBT]
-	533A2-42202		KNUCKLE,RH	ﾅｯｸﾙ	1	[FC/RINFC/EXC&E&K&N]
-	533A2-42202		KNUCKLE,RH	ﾅｯｸﾙ	1	[FC/RINFC/OBT] [FC/RINFC/EXB/OBT]
11	533A2-42042		KNUCKLE,LH	ﾅｯｸﾙ	1	[EXC&E&K&N][OBT][EXB/OBT]
-	533A2-42212		KNUCKLE,LH	ﾅｯｸﾙ	1	[FC/RINFC/EXC&E&K&N]
-	533A2-42212		KNUCKLE,LH	ﾅｯｸﾙ	1	[FC/RINFC/OBT] [FC/RINFC/EXB/OBT]
12	22214-30321	*	SHIM	ｼﾑ	6	[EXC&E&K&N][OBT][EXB/OBT]
13	03126-83201	*	BRG,THRUST	ﾍﾞｱﾘﾝｸﾞ	2	[EXC&E&K&N][OBT][EXB/OBT]
14	24454-32232		KINGPIN	ｷﾝｸﾞﾋﾟﾝ	2	[EXC&E&K&N][OBT][EXB/OBT]

FIG.97 STEERING AXLE [EXC][EXE][EXK][EXN][OBT]

(F5024320) ステアリング゛アクスル

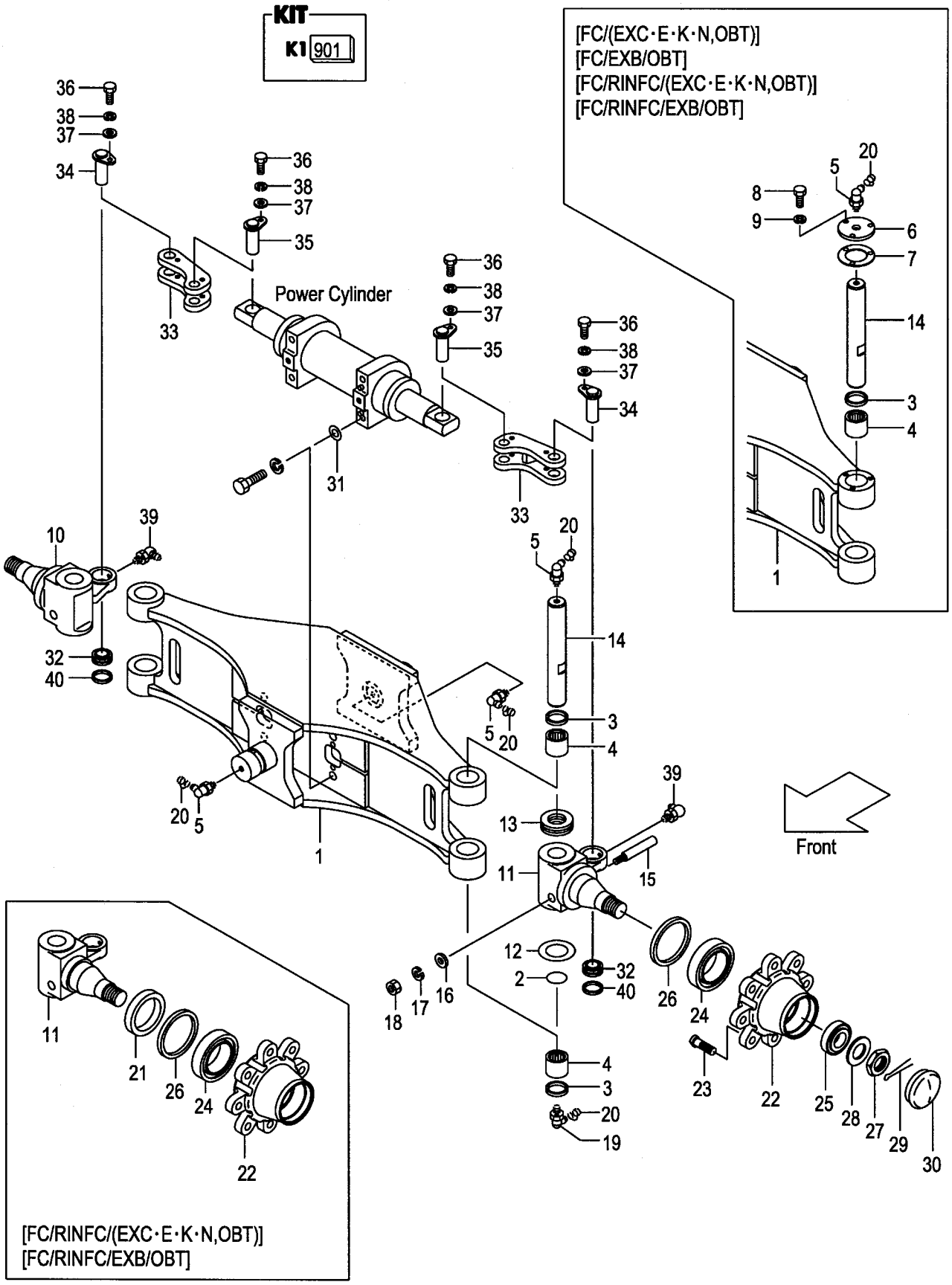

A:FG20C6 FG20T6 FG25C6 FG25T6
B:FD20C6 FD20T6 FD25C6 FD25T6

Item No	Part No.	Mark	Description		Req'd	Remarks : Serial No.
-	514A2-44071		KINGPIN	ｷﾝｸﾞﾋﾟﾝ	2	[FC/EXC&E&K&N][FC/OBT]
						[FC/EXB/OBT]
-	514A2-44071		KINGPIN	ｷﾝｸﾞﾋﾟﾝ	2	[FC/RINFC/EXC&E&K&N]
-	514A2-44071		KINGPIN	ｷﾝｸﾞﾋﾟﾝ	2	[FC/RINFC/OBT]
						[FC/RINFC/EXB/OBT]
15	215E4-32341	*	PIN,LOCK	ﾋﾟﾝ	2	[EXC&E&K&N][OBT][EXB/OBT]
16	02000-00010	*	WASHER	ﾜｯｼｬ	2	[EXC&E&K&N][OBT][EXB/OBT]
17	02010-00010	*	WASHER	ﾜｯｼｬ	2	[EXC&E&K&N][OBT][EXB/OBT]
18	01400-00010	*	NUT	ﾅｯﾄ	2	[EXC&E&K&N][OBT][EXB/OBT]
19	04901-00191	*	FITTING	ﾌｨｯﾃｨﾝｸﾞ	2	[EXC&E&K&N][OBT][EXB/OBT]
20	22199-12401		CAP,NIPPLE	ｷｬｯﾌﾟ	6	[EXC&E&K&N][OBT][EXB/OBT]
21	514A3-72211		SEAT,OIL-SEAL	ｼｰﾄ	2	[FC/RINFC/EXC&E&K&N]
-	514A3-72211		SEAT,OIL-SEAL	ｼｰﾄ	2	[FC/RINFC/OBT]
						[FC/RINFC/EXB/OBT]
22	214A4-32041		HUB,REAR	ﾊﾌﾞ	2	[EXC&E&K&N][OBT][EXB/OBT]
23	23654-32041		BOLT,HUB	ﾎﾞﾙﾄ	16	[EXC&E&K&N][OBT][EXB/OBT]
24	03071-30211		BRG,TAPER-ROLLER	ﾍﾞｱﾘﾝｸﾞ	2	[EXC&E&K&N][OBT][EXB/OBT]
25	03071-30207		BRG,TAPER-ROLLER	ﾍﾞｱﾘﾝｸﾞ	2	[EXC&E&K&N][OBT][EXB/OBT]
26	03217-08501		SEAL,OIL	ｼｰﾙ	2	[EXC&E&K&N][OBT][EXB/OBT]
27	01412-00030		NUT,CASTLE	ﾅｯﾄ	2	[EXC&E&K&N][OBT][EXB/OBT]
28	02000-00030		WASHER	ﾜｯｼｬ	2	[EXC&E&K&N][OBT][EXB/OBT]
29	02200-06055		PIN,COTTER	ﾋﾟﾝ	2	[EXC&E&K&N][OBT][EXB/OBT]
30	214A4-32051		CAP	ｷｬｯﾌﾟ	2	[EXC&E&K&N][OBT][EXB/OBT]
31	514A2-42481		SHIM,T-0.2	ｼﾑ	1	[EXC&E&K&N][OBT][EXB/OBT]
32	215E4-52231		JOINT,SPHERE-FACE	ｼﾞｮｲﾝﾄ	2	[EXC&E&K&N][OBT][EXB/OBT]
33	533A2-42071		YOKE	ﾖｰｸ	2	[EXC&E&K&N][OBT][EXB/OBT]
34	514A2-42721		PIN	ﾋﾟﾝ	2	[EXC&E&K&N][OBT][EXB/OBT]
35	533A2-42101		PIN	ﾋﾟﾝ	2	[EXC&E&K&N][OBT][EXB/OBT]
36	01103-08016		BOLT	ﾎﾞﾙﾄ	4	[EXC&E&K&N][OBT][EXB/OBT]
37	02000-00008		WASHER	ﾜｯｼｬ	4	[EXC&E&K&N][OBT][EXB/OBT]
38	02011-00008		WASHER	ﾜｯｼｬ	4	[EXC&E&K&N][OBT][EXB/OBT]
39	272A8-52101		NIPPLE,GREASE	ﾆｯﾌﾟﾙ	2	[EXC&E&K&N][OBT][EXB/OBT]
40	215E4-52301		COLLAR	ｶﾗｰ	2	[EXC&E&K&N][OBT][EXB/OBT]

FIG.98 STEERING AXLE [(EXC,EXE,EXK,EXN)/PSS]

(F5024330) ステアリング アクスル

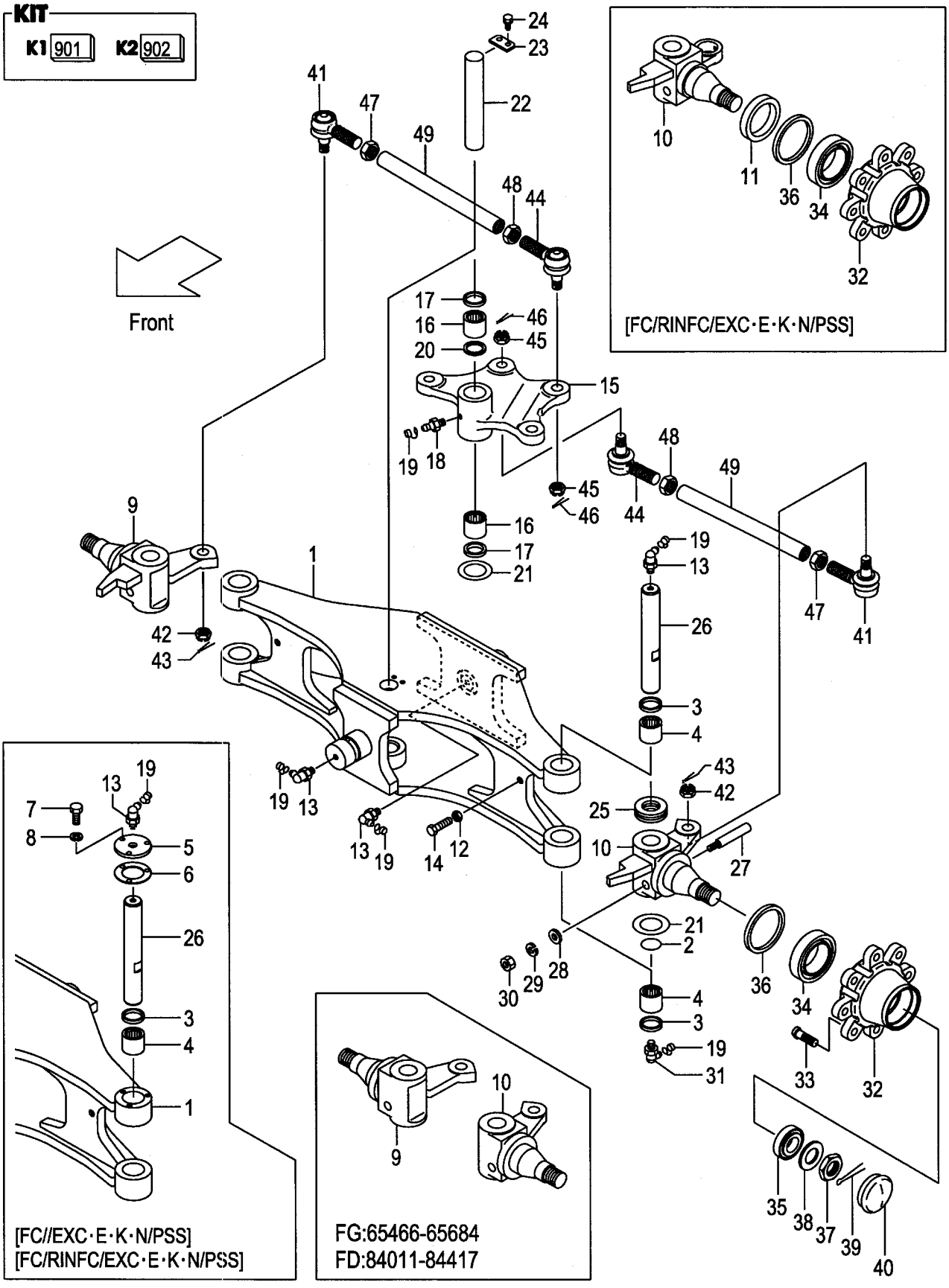

A:FG20C6 FG20T6 FG25C6 FG25T6
B:FD20C6 FD20T6 FD25C6 FD25T6

Item No	Part No.	Mark	Description		Req'd	Remarks : Serial No.
A1	234A4-30001		AXLE-ASSY,STEERING	ｽﾃｱﾘﾝｸﾞｱｸｽﾙｱｯｾﾝ	1	A:1-65465 B:1-84010 [EXC&E&K&N/PSS] INC.1-4,9,10,12-49
-	239A4-30131		AXLE-ASSY,STEERING	ｽﾃｱﾘﾝｸﾞｱｸｽﾙｱｯｾﾝ	1	A:65466-65684 B:84011-84417 [EXC&E&K&N/PSS] INC.1-4,9,10,12-49
-	234A4-30001		AXLE-ASSY,STEERING	ｽﾃｱﾘﾝｸﾞｱｸｽﾙｱｯｾﾝ	1	A:65685- B:84418- [EXC&E&K&N/PSS] INC.1-4,9,10,12-49
-	534A3-70021		AXLE-ASSY,STEERING	ｽﾃｱﾘﾝｸﾞｱｸｽﾙｱｯｾﾝ	1	A:1-65465 B:1-84010 [FC/EXC&E&K&N/PSS] INC.1-10,12-49
-	539A3-70021		AXLE-ASSY,STEERING	ｽﾃｱﾘﾝｸﾞｱｸｽﾙｱｯｾﾝ	1	A:65466-65684 B:84011-84417 [FC/EXC&E&K&N/PSS] INC.1-10,12-49
-	534A3-70021		AXLE-ASSY,STEERING	ｽﾃｱﾘﾝｸﾞｱｸｽﾙｱｯｾﾝ	1	A:65685- B:84418- [FC/EXC&E&K&N/PSS] INC.1-10,12-49
-	534A3-70031		AXLE-ASSY,STEERING	ｽﾃｱﾘﾝｸﾞｱｸｽﾙｱｯｾﾝ	1	A:1-65465 B:1-84010 [FC/RINFC/EXC&E&K&N/PSS] INC.1-49
-	539A3-70031		AXLE-ASSY,STEERING	ｽﾃｱﾘﾝｸﾞｱｸｽﾙｱｯｾﾝ	1	A:65466-65684 B:84011-84417 [FC/RINFC/EXC&E&K&N/PSS] INC.1-49
-	534A3-70031		AXLE-ASSY,STEERING	ｽﾃｱﾘﾝｸﾞｱｸｽﾙｱｯｾﾝ	1	A:65685- B:84418- [FC/RINFC/EXC&E&K&N/PSS] INC.1-49
901	215E4-39801	K1	KIT,REPAIR	ﾘﾍﾟｱｷｯﾄ	1	[EXC&E&K&N/PSS] INC.2-4,13,21,25,27-30
902	24454-39812	K2	KIT,REPAIR	ﾘﾍﾟｱｷｯﾄ	1	[EXC&E&K&N/PSS] INC.16-18,20,21,23,24
1	234A4-30111		AXLE,STEERING	ｱｸｽﾙ	1	A:1-65465 B:1-84010 [EXC&E&K&N/PSS]
-	239A4-30251		AXLE,STEERING	ｱｸｽﾙ	1	A:65466-65684 B:84011-84417 [EXC&E&K&N/PSS]
-	234A4-30111		AXLE,STEERING	ｱｸｽﾙ	1	A:65685- B:84418- [EXC&E&K&N/PSS]

FIG.98 STEERING AXLE [(EXC,EXE,EXK,EXN)/PSS]

(F5024330) ステアリング アクスル

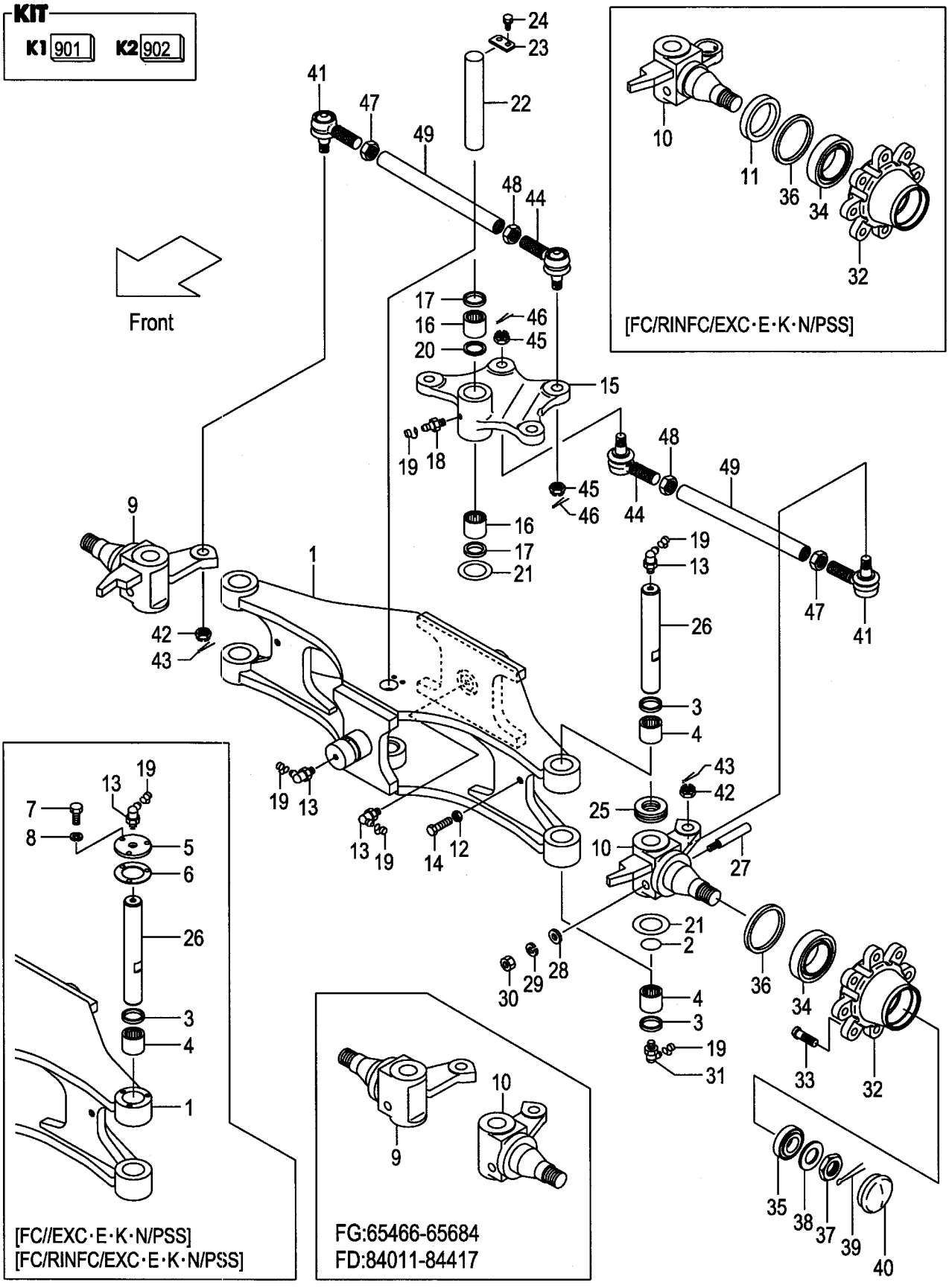

A:FG20C6 FG20T6 FG25C6 FG25T6
B:FD20C6 FD20T6 FD25C6 FD25T6

Item No	Part No.	Mark	Description		Req'd	Remarks : Serial No.
-	534A3-70101		AXLE,STEERING	ｱｸｽﾙ	1	A:1-65465 B:1-84010 [FC/EXC&E&K&N/PSS] [FC/RINFC/EXC&E&K&N/PSS]
-	539A3-70101		AXLE,STEERING	ｱｸｽﾙ	1	A:65466-65684 B:84011-84417 [FC/EXC&E&K&N/PSS] [FC/RINFC/EXC&E&K&N/PSS]
-	534A3-70101		AXLE,STEERING	ｱｸｽﾙ	1	A:65685- B:84418- [FC/EXC&E&K&N/PSS] [FC/RINFC/EXC&E&K&N/PSS]
2	23654-32161	*	O-RING	Oﾘﾝｸﾞ	2	[EXC&E&K&N/PSS]
3	214A4-32161	*	SEAL,DUST	ｼｰﾙ	4	[EXC&E&K&N/PSS]
4	03146-13201	*	BRG,NEEDLE	ﾍﾞｱﾘﾝｸﾞ	4	[EXC&E&K&N/PSS]
5	514A3-72052		PLATE,CAP	ﾌﾟﾚｰﾄ	2	[FC/EXC&E&K&N/PSS] [FC/RINFC/EXC&E&K&N/PSS]
6	514A3-72062		PACKING	ﾊﾟｯｷﾝｸﾞ	2	[FC/EXC&E&K&N/PSS] [FC/RINFC/EXC&E&K&N/PSS]
7	01141-06012		BOLT	ﾎﾞﾙﾄ	6	[FC/EXC&E&K&N/PSS] [FC/RINFC/EXC&E&K&N/PSS]
8	02010-10006		WASHER	ﾜｯｼｬ	6	[FC/EXC&E&K&N/PSS] [FC/RINFC/EXC&E&K&N/PSS]
9	234A4-32261		KNUCKLE,RH	ﾅｯｸﾙ	1	A:1-65465 B:1-84010 [EXC&E&K&N/PSS]
-	239A4-32101		KNUCKLE,RH	ﾅｯｸﾙ	1	A:65466-65684 B:84011-84417 [EXC&E&K&N/PSS]
-	234A4-32261		KNUCKLE,RH	ﾅｯｸﾙ	1	A:65685- B:84418- [EXC&E&K&N/PSS]
-	534A3-72111		KNUCKLE,RH	ﾅｯｸﾙ	1	A:1-65465 B:1-84010 [FC/RINFC/EXC&E&K&N/PSS]
-	539A3-72111		KNUCKLE,RH	ﾅｯｸﾙ	1	A:65466-65684 B:84011-84417 [FC/RINFC/EXC&E&K&N/PSS]
-	534A3-72111		KNUCKLE,RH	ﾅｯｸﾙ	1	A:65685- B:84418- [FC/RINFC/EXC&E&K&N/PSS]
10	234A4-32271		KNUCKLE,LH	ﾅｯｸﾙ	1	A:1-65465 B:1-84010 [EXC&E&K&N/PSS]
-	239A4-32111		KNUCKLE,LH	ﾅｯｸﾙ	1	A:65466-65684 B:84011-84417 [EXC&E&K&N/PSS]
-	234A4-32271		KNUCKLE,LH	ﾅｯｸﾙ	1	A:65685- B:84418- [EXC&E&K&N/PSS]

FIG.98 STEERING AXLE [(EXC,EXE,EXK,EXN)/PSS]

(F5024330) ステアリング アクスル

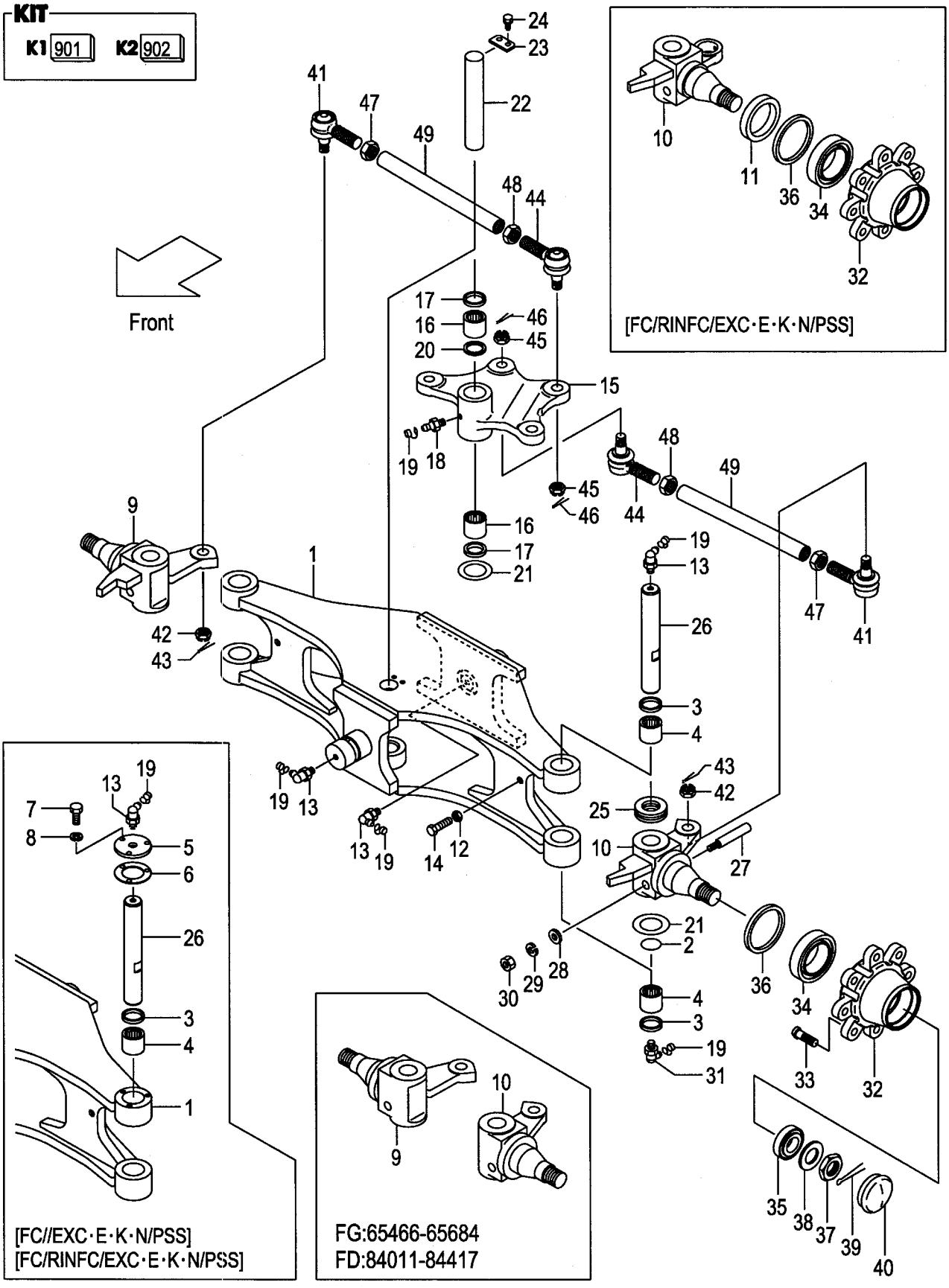

A:FG20C6 FG20T6 FG25C6 FG25T6
B:FD20C6 FD20T6 FD25C6 FD25T6

Item No	Part No.	Mark	Description		Req'd	Remarks : Serial No.
-	534A3-72121		KNUCKLE,LH	ﾅｯｸﾙ	1	A:1-65465
						B:1-84010
						[FC/RINFC/EXC&E&K&N/PSS]
-	539A3-72121		KNUCKLE,LH	ﾅｯｸﾙ	1	A:65466-65684
						B:84011-84417
						[FC/RINFC/EXC&E&K&N/PSS]
-	534A3-72121		KNUCKLE,LH	ﾅｯｸﾙ	1	A:65685-
						B:84418-
						[FC/RINFC/EXC&E&K&N/PSS]
11	514A3-72211		SEAT,OIL-SEAL	ｼｰﾄ	2	[FC/RINFC/EXC&E&K&N/PSS]
12	01402-00012		NUT	ﾅｯﾄ	2	[EXC&E&K&N/PSS]
13	04901-00190	*	FITTING	ﾌｨｯﾃｨﾝｸﾞ	4	[EXC&E&K&N/PSS]
14	01100-12030		BOLT	ﾎﾞﾙﾄ	2	[EXC&E&K&N/PSS]
15	24454-30512		ARM,CENTER	ｱｰﾑ	1	[EXC&E&K&N/PSS]
16	03146-13201	*	BRG,NEEDLE	ﾍﾞｱﾘﾝｸﾞ	2	[EXC&E&K&N/PSS]
17	23654-32081	*	SEAL,DUST	ｼｰﾙ	2	[EXC&E&K&N/PSS]
18	04901-00100	*	FITTING	ﾌｨｯﾃｨﾝｸﾞ	1	[EXC&E&K&N/PSS]
19	22199-12401		CAP,NIPPLE	ｷｬｯﾌﾟ	7	[EXC&E&K&N/PSS]
20	24454-32391	*	SPACER	ｽﾍﾟｰｻ	1	[EXC&E&K&N/PSS]
21	22214-30321	*	SHIM	ｼﾑ	7	[EXC&E&K&N/PSS]
22	24454-32161		PIN,CENTER-ARM	ﾋﾟﾝ	1	[EXC&E&K&N/PSS]
23	20224-30061	*	PLATE,SET	ﾌﾟﾚｰﾄ	1	[EXC&E&K&N/PSS]
24	01183-08016	*	BOLT	ﾎﾞﾙﾄ	2	[EXC&E&K&N/PSS]
25	03126-83201	*	BRG,THRUST	ﾍﾞｱﾘﾝｸﾞ	2	[EXC&E&K&N/PSS]
26	24454-32232		KINGPIN	ｷﾝｸﾞﾋﾟﾝ	2	[EXC&E&K&N/PSS]
-	514A3-72201		KINGPIN	ｷﾝｸﾞﾋﾟﾝ	2	[FC/EXC&E&K&N/PSS]
						[FC/RINFC/EXC&E&K&N/PSS]
27	215E4-32341	*	PIN,LOCK	ﾋﾟﾝ	2	[EXC&E&K&N/PSS]
28	02000-00010	*	WASHER	ﾜｯｼｬ	2	[EXC&E&K&N/PSS]
29	02010-00010	*	WASHER	ﾜｯｼｬ	2	[EXC&E&K&N/PSS]
30	01400-00010	*	NUT	ﾅｯﾄ	2	[EXC&E&K&N/PSS]
31	04901-00191		FITTING	ﾌｨｯﾃｨﾝｸﾞ	2	[EXC&E&K&N/PSS]
32	214A4-32041		HUB,REAR	ﾊﾌﾞ	2	[EXC&E&K&N/PSS]
33	23654-32041		BOLT,HUB	ﾎﾞﾙﾄ	16	[EXC&E&K&N/PSS]
34	03071-30211		BRG,TAPER-ROLLER	ﾍﾞｱﾘﾝｸﾞ	2	[EXC&E&K&N/PSS]
35	03071-30207		BRG,TAPER-ROLLER	ﾍﾞｱﾘﾝｸﾞ	2	[EXC&E&K&N/PSS]
36	03217-08501		SEAL,OIL	ｼｰﾙ	2	[EXC&E&K&N/PSS]
37	01412-00030		NUT,CASTLE	ﾅｯﾄ	2	[EXC&E&K&N/PSS]
38	02000-00030		WASHER	ﾜｯｼｬ	2	[EXC&E&K&N/PSS]
39	02200-06055		PIN,COTTER	ﾋﾟﾝ	2	[EXC&E&K&N/PSS]
40	214A4-32051		CAP	ｷｬｯﾌﾟ	2	[EXC&E&K&N/PSS]
A2	24234-30551		END-ASSY,ROD,RH	ｴﾝﾄﾞｱｯｾﾝ	2	[EXC&E&K&N/PSS] INC.41-43
41	NO PART NO.	#	END,ROD,RH	ｴﾝﾄﾞ	2	[EXC&E&K&N/PSS]
42	01412-10016		NUT,CASTLE	ﾅｯﾄ	2	[EXC&E&K&N/PSS]
43	02200-32032		PIN,COTTER	ﾋﾟﾝ	2	[EXC&E&K&N/PSS]
A3	24234-30561		END-ASSY,ROD,LH	ｴﾝﾄﾞｱｯｾﾝ	2	[EXC&E&K&N/PSS] INC.44-46
44	NO PART NO.	#	END,ROD,LH	ｴﾝﾄﾞ	2	[EXC&E&K&N/PSS]
45	01412-10016		NUT,CASTLE	ﾅｯﾄ	2	[EXC&E&K&N/PSS]
46	02200-32032		PIN,COTTER	ﾋﾟﾝ	2	[EXC&E&K&N/PSS]
47	24234-32411		NUT,RH	ﾅｯﾄ	2	[EXC&E&K&N/PSS]

FIG.98 STEERING AXLE [(EXC,EXE,EXK,EXN)/PSS]

(F5024330) ステアリング アクスル

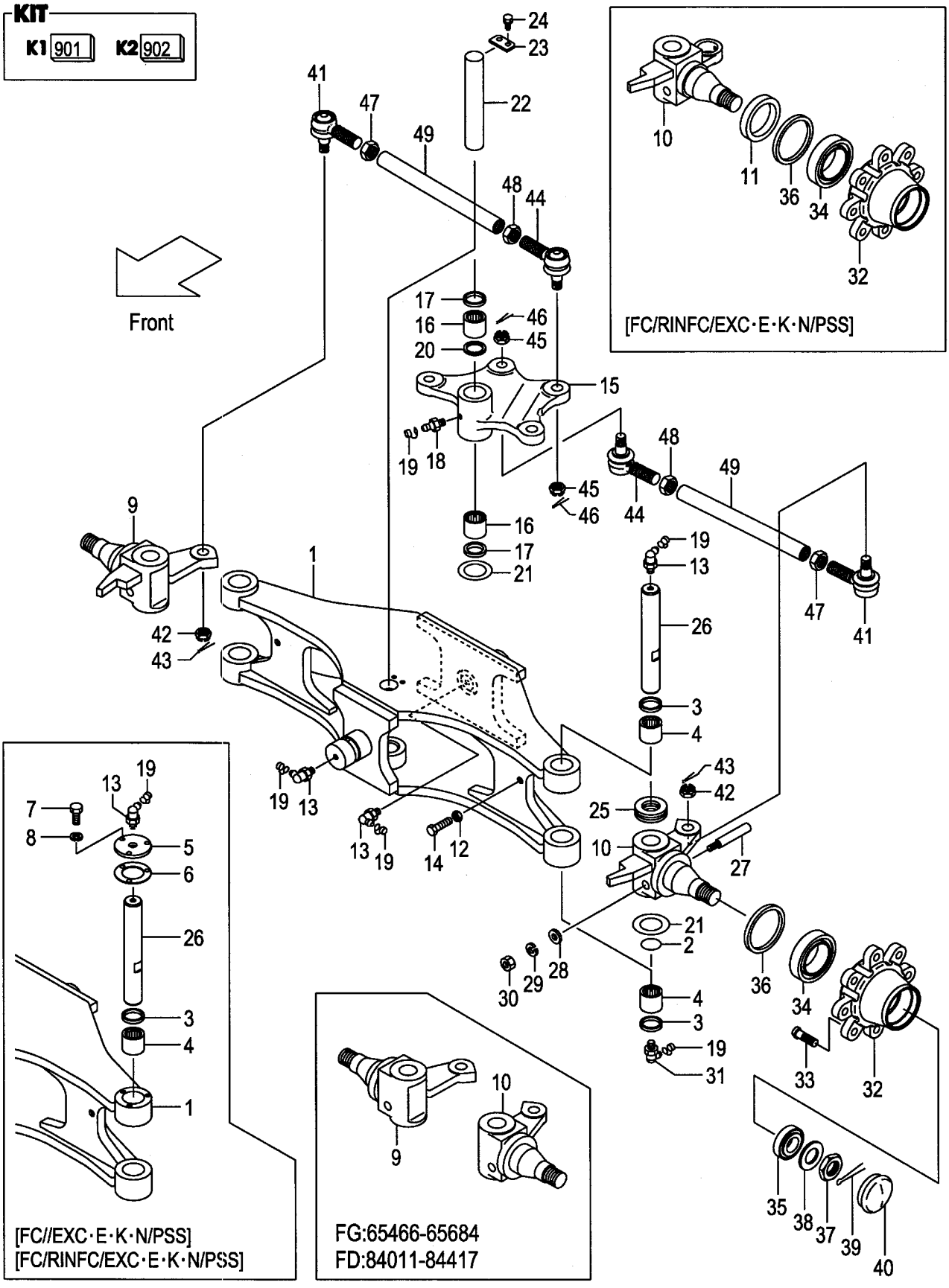

A:FG20C6 FG20T6 FG25C6 FG25T6
B:FD20C6 FD20T6 FD25C6 FD25T6

Item No	Part No.	Mark	Description	Req'd	Remarks : Serial No.
48	24234-32421		NUT,LH ﾅｯﾄ	2	[EXC&E&K&N/PSS]
49	214A4-32131		ROD,TIE ﾛｯﾄﾞ	2	[EXC&E&K&N/PSS]

FIG.99 AXLE SUPPORT

(F5024360) アクスルサポート

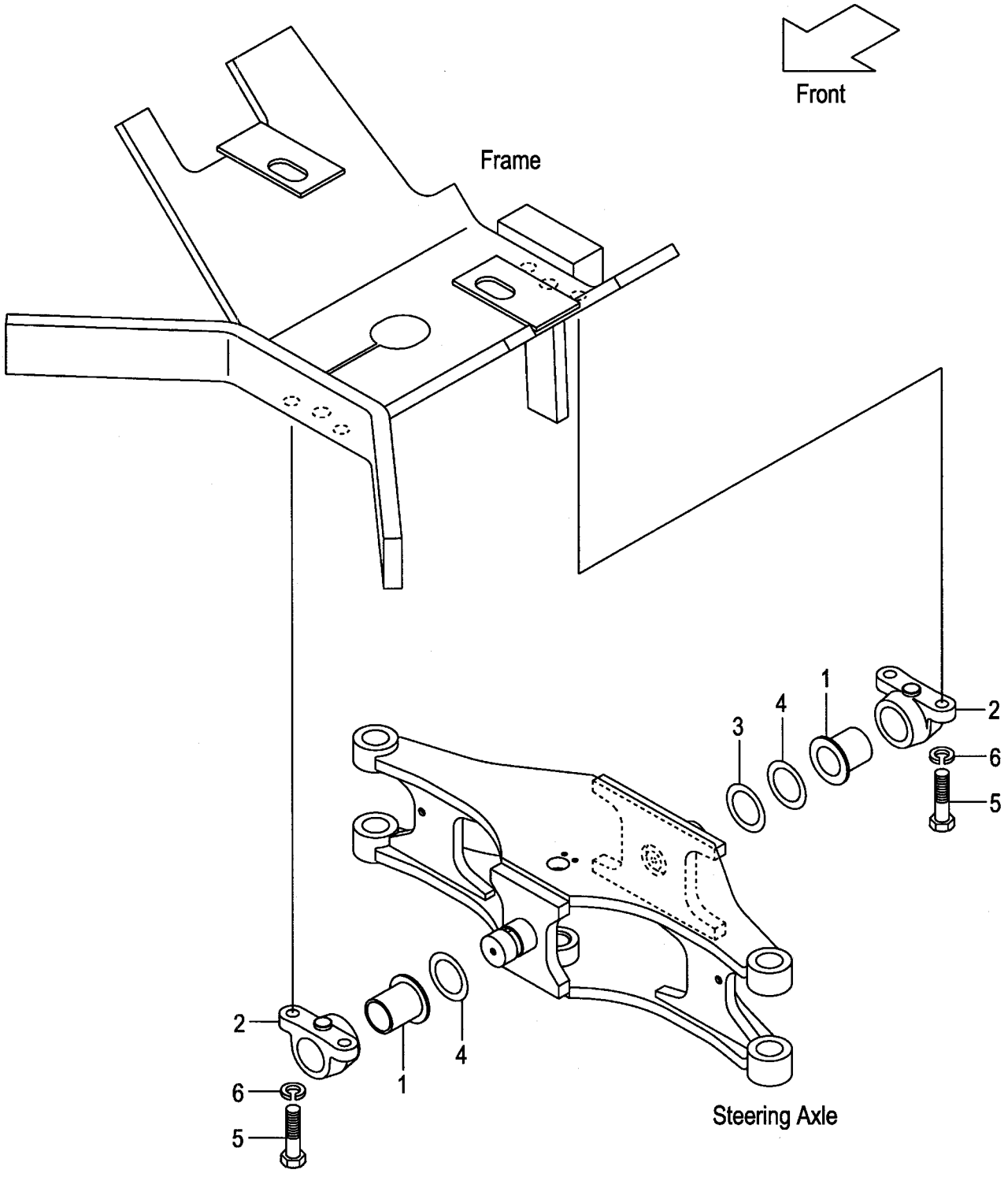

A:FG20C17 FG20T17 FG25C17 FG25T17 C:FD20C17 FD20T17 FD25C17 FD25T17
B:FG20C6 FG20T6 FG25C6 FG25T6 FG20W6 FG25W6 D:FD20C6 FD20T6 FD25C6 FD25T6 FD20W6 FD25W6

Item No	Part No.	Mark	Description		Req'd	Remarks : Serial No.
1	214A6-12601		BUSHING	ﾌﾞｯｼﾝｸﾞ	2	
2	214A6-12611		SUPPORT,REAR-AXLE	ｻﾎﾟｰﾄ	2	A:1-11058 B:1-66825 C:1-11029 D:1-86786
-	238G6-12401		SUPPORT,REAR-AXLE	ｻﾎﾟｰﾄ	2	A:11059- B:66826- C:11030- D:86787-
3	214A4-32201		SHIM,T-0.5	ｼﾑ	1	
4	214A4-32211		SHIM,T-1.0	ｼﾑ	2	
5	01100-20080		BOLT	ﾎﾞﾙﾄ	4	A:1-11058 B:1-66825 C:1-11029 D:1-86786
-	01100-16045		BOLT	ﾎﾞﾙﾄ	4	A:11059- B:66826- C:11030- D:86787-
6	02010-00020		WASHER	ﾜｯｼｬ	4	A:1-11058 B:1-66825 C:1-11029 D:1-86786
-	02010-00016		WASHER	ﾜｯｼｬ	4	A:11059- B:66826- C:11030- D:86787-

FIG.100 HUB NUT
(F5024410) ﾊﾌﾞﾅｯﾄ

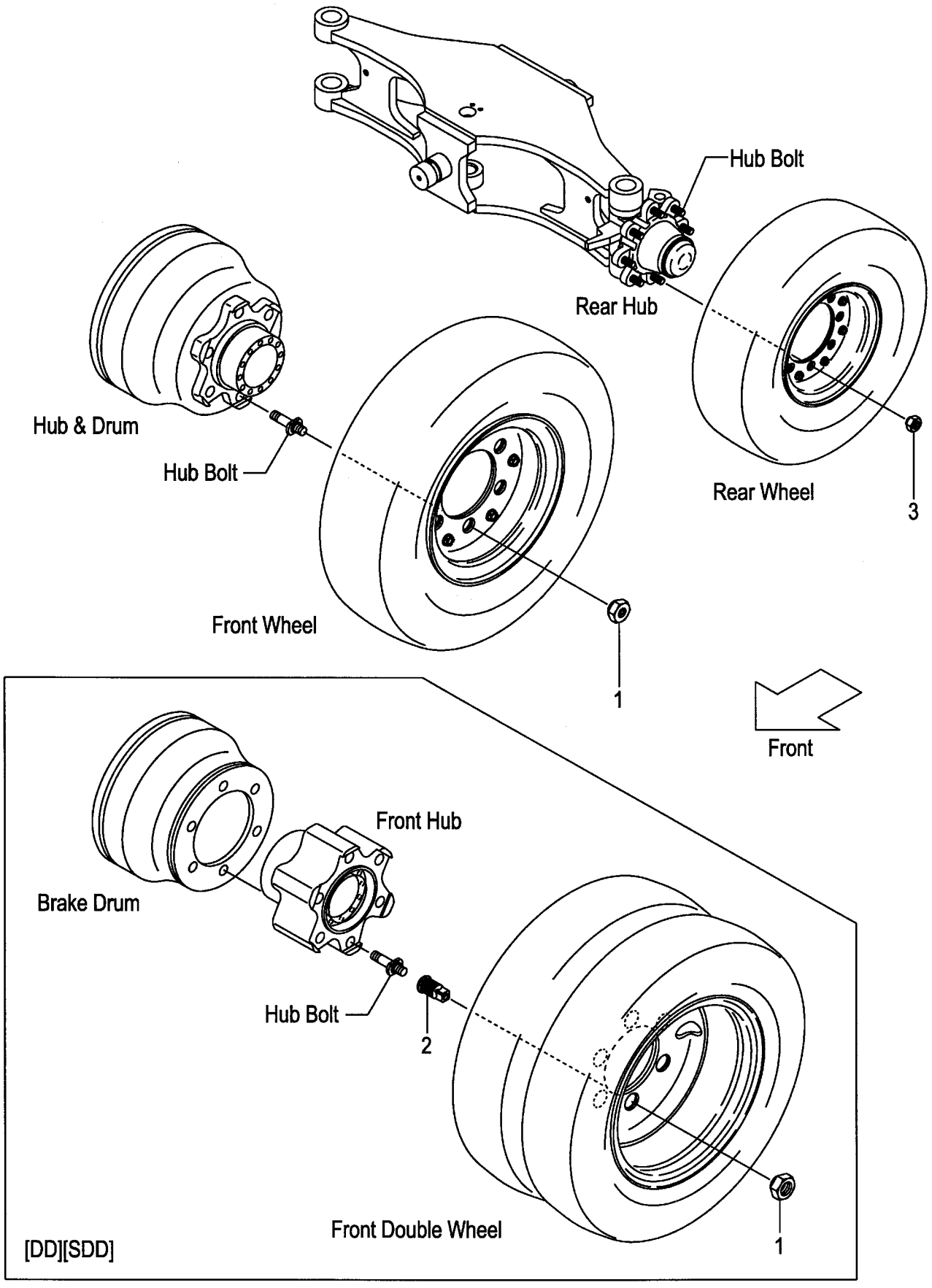

FIG.100

(F5024410)

A:FG20C17 FG20T17 FG25C17 FG25T17 C:FD20C17 FD20T17 FD25C17 FD25T17
B:FG20C6 FG20T6 FG25C6 FG25T6 FG20W6 FG25W6 D:FD20C6 FD20T6 FD25C6 FD25T6 FD20W6 FD25W6

Item No	Part No.	Mark	Description	Req'd	Remarks : Serial No.
1	24354-32311		NUT,HUB ナット	12	(FRONT)
-	57045-52141		NUT,HUB ナット	12	[FC](FRONT)
-	23813-00081		NUT,HUB ナット	12	[DD][SDD](FRONT)
-	514A3-72101		NUT,HUB ナット	12	[FC/DD][FC/SDD](FRONT)
2	23813-00071		NUT,INNER ナット	12	[DD][SDD][FC/DD][FC/SDD] (FRONT)
3	23654-34051		NUT,HUB ナット	16	(REAR)
-	57045-52151		NUT,HUB ナット	16	[FC](REAR)

FIG.101 FENDER [DD][SDD][TUJSF]

(F5024420) ﾌｪﾝﾀﾞ

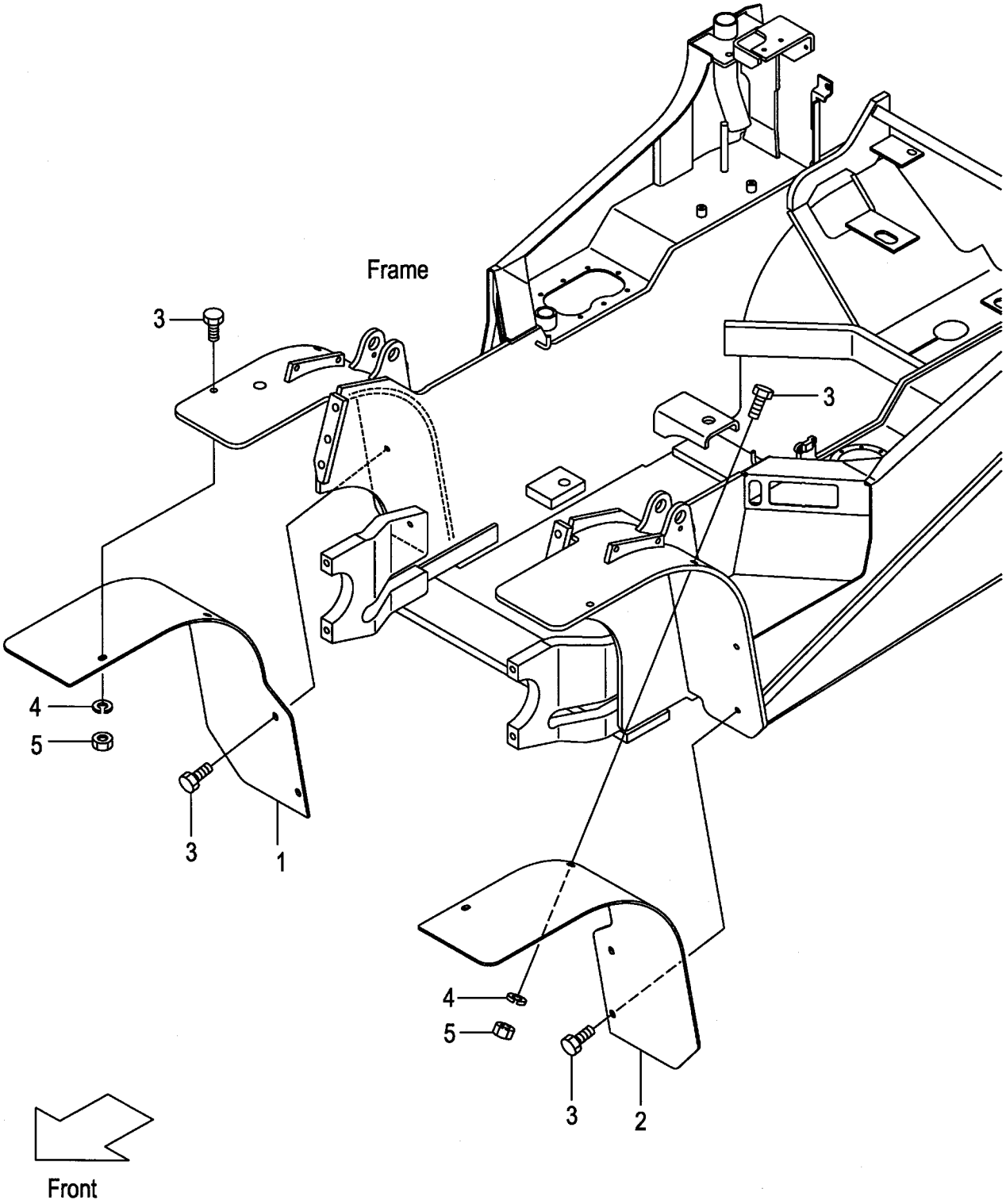

A:FG20C17 FG20T17 FG25C17 FG25T17 C:FD20C17 FD20T17 FD25C17 FD25T17
B:FG20C6 FG20T6 FG25C6 FG25T6 FG20W6 FG25W6 D:FD20C6 FD20T6 FD25C6 FD25T6 FD20W6 FD25W6

Item No	Part No.	Mark	Description	Req'd	Remarks : Serial No.
1	539A7-42001		FENDER,FRONT,RH ﾌｪﾝﾀﾞ	1	A:1-11027 B:1-65592 C:1-11011 D:1-84216 [DD]
-	539B7-42001		FENDER,FRONT,RH ﾌｪﾝﾀﾞ	1	A:11028- B:65593- C:11012- D:84217- [DD]
-	539A7-42021		FENDER,FRONT,RH ﾌｪﾝﾀﾞ	1	A:1-11027 B:1-65592 C:1-11011 D:1-84216 [SDD]
-	539B7-42021		FENDER,FRONT,RH ﾌｪﾝﾀﾞ	1	A:11028- B:65593- C:11012- D:84217- [SDD]
-	539A7-42061		FENDER,FRONT,RH ﾌｪﾝﾀﾞ	1	A:1-11027 B:1-65592 C:1-11011 D:1-84216 [TUJSF]
-	539B7-42061		FENDER,FRONT,RH ﾌｪﾝﾀﾞ	1	A:11028- B:65593- C:11012- D:84217- [TUJSF]
2	539A7-42011		FENDER,FRONT,LH ﾌｪﾝﾀﾞ	1	A:1-11027 B:1-65592 C:1-11011 D:1-84216 [DD]
-	539B7-42011		FENDER,FRONT,LH ﾌｪﾝﾀﾞ	1	A:11028- B:65593- C:11012- D:84217- [DD]
-	539A7-42031		FENDER,FRONT,LH ﾌｪﾝﾀﾞ	1	A:1-11027 B:1-65592 C:1-11011 D:1-84216 [SDD]
-	539B7-42031		FENDER,FRONT,LH ﾌｪﾝﾀﾞ	1	A:11028- B:65593- C:11012- D:84217- [SDD]

FIG.101 FENDER [DD][SDD][TUJSF]

(F5024420) ﾌｪﾝﾀﾞ

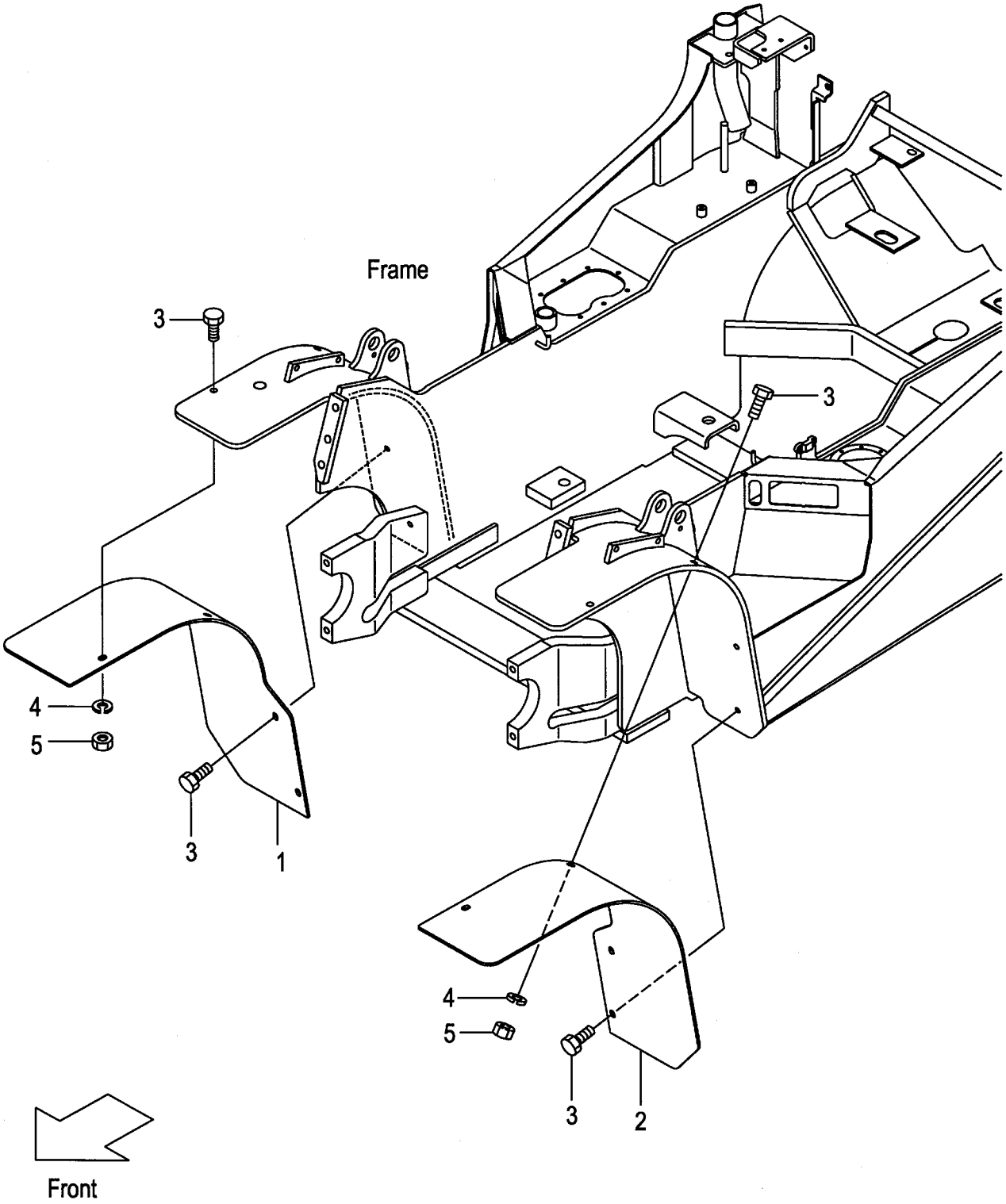

A:FG20C17 FG20T17 FG25C17 FG25T17 C:FD20C17 FD20T17 FD25C17 FD25T17
B:FG20C6 FG20T6 FG25C6 FG25T6 FG20W6 FG25W6 D:FD20C6 FD20T6 FD25C6 FD25T6 FD20W6 FD25W6

Item No	Part No.	Mark	Description		Req'd	Remarks : Serial No.
-	539A7-42071		FENDER,FRONT,LH	ﾌｪﾝﾀﾞ	1	A:1-11027 B:1-65592 C:1-11011 D:1-84216 [TUJSF]
-	539B7-42071		FENDER,FRONT,LH	ﾌｪﾝﾀﾞ	1	A:11028- B:65593- C:11012- D:84217- [TUJSF]
3	01186-10030		BOLT	ﾎﾞﾙﾄ	8	[DD][SDD][TUJSF]
4	02000-00010		WASHER	ﾜｯｼｬ	4	[DD][SDD][TUJSF]
5	01400-00010		NUT	ﾅｯﾄ	4	[DD][SDD][TUJSF]

FIG.102 FRONT WHEEL
(F5024430) フロントホイール

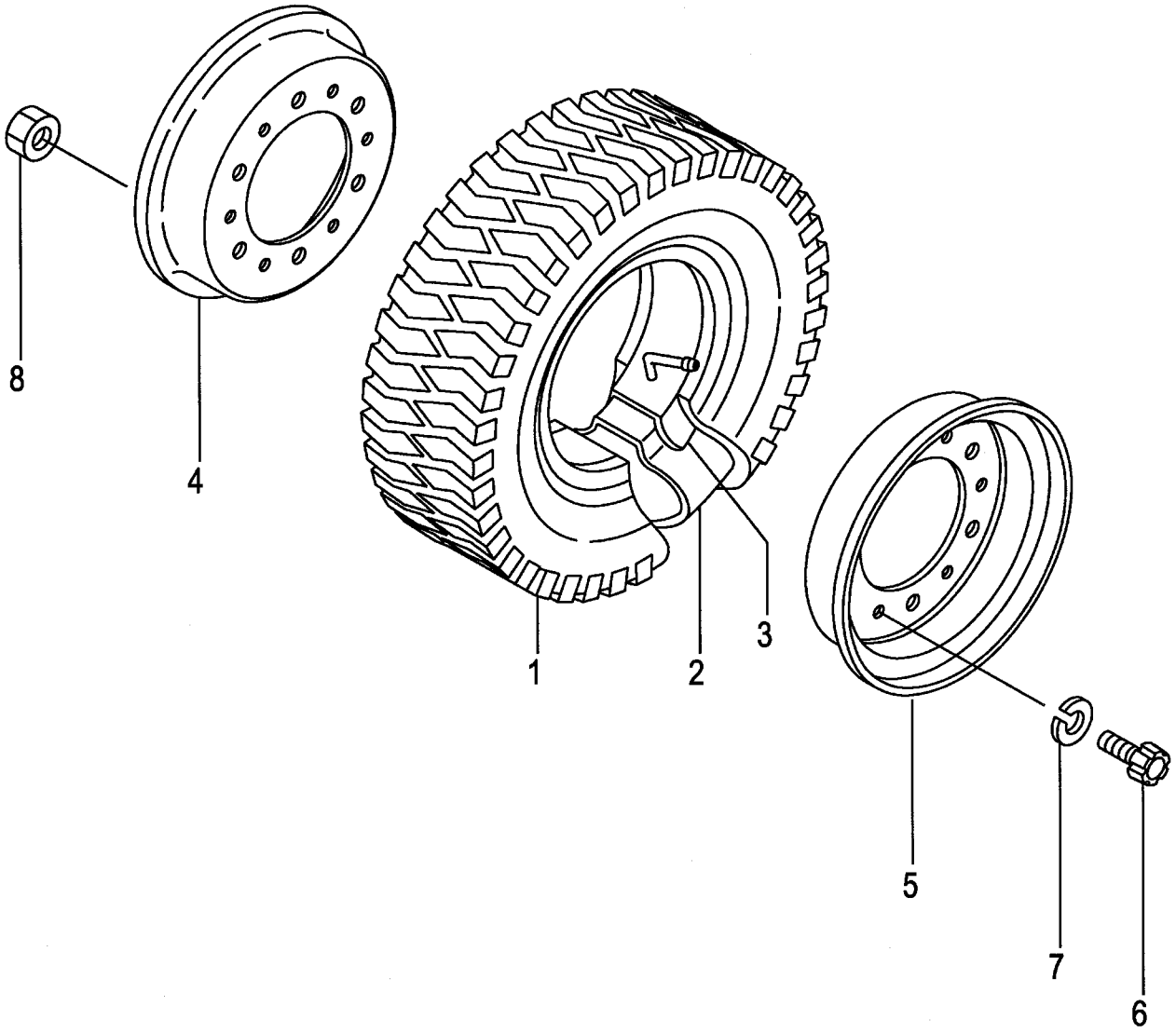

A:FG20C17 FG20T17 FG25C17 FG25T17 C:FD20C17 FD20T17 FD25C17 FD25T17
B:FG20C6 FG20T6 FG25C6 FG25T6 FG20W6 FG25W6 D:FD20C6 FD20T6 FD25C6 FD25T6 FD20W6 FD25W6

Item No	Part No.	Mark	Description		Req'd	Remarks : Serial No.
A1	53456-80902		WHEEL-ASSY,FRONT	ﾌﾛﾝﾄﾎｲｰﾙｱｯｾﾝ	2	INC.1-8
1	06006-70012		TIRE,700-12-12	ﾀｲﾔ	2	
2	06711-70012		TUBE,700-12-12T	ﾁｭｰﾌﾞ	2	
3	06701-70012		FLAP,700-12-12F	ﾌﾗｯﾌﾟ	2	
A2	23454-40501		RIM-ASSY,500S-12	ﾘﾑｱｯｾﾝ	2	INC.4-8
4	NO PART NO.	#	RIM,INSIDE	ﾘﾑ	2	
5	NO PART NO.	#	RIM,OUTSIDE	ﾘﾑ	2	
6	514A3-82601		BOLT	ﾎﾞﾙﾄ	12	
7	02011-00016		WASHER	ﾜｯｼｬ	12	
8	01400-10016		NUT	ﾅｯﾄ	12	

FIG.103 FRONT WHEEL [DR F]

(F5024440) フロントホイール

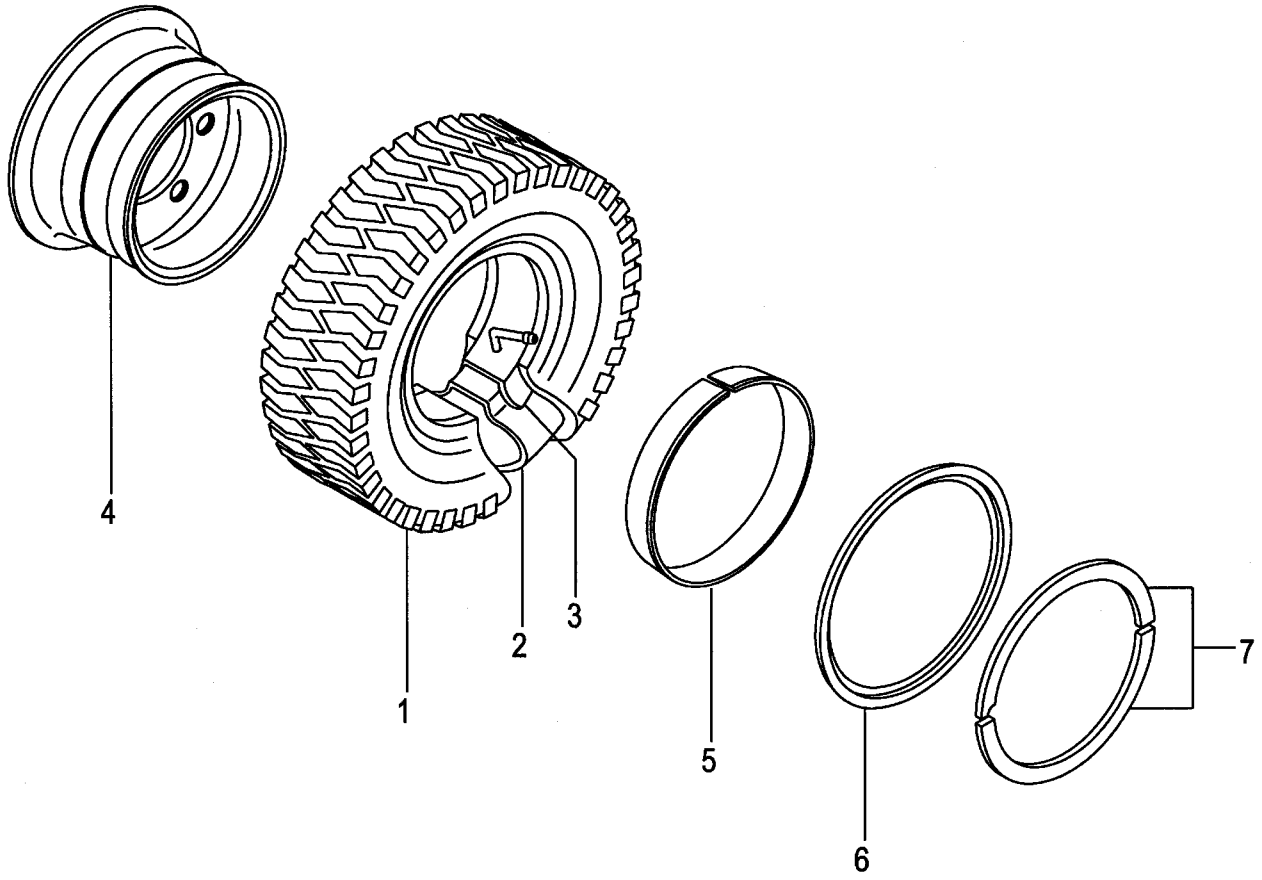

A:FG20C17 FG20T17 FG25C17 FG25T17 C:FD20C17 FD20T17 FD25C17 FD25T17
B:FG20C6 FG20T6 FG25C6 FG25T6 FG20W6 FG25W6 D:FD20C6 FD20T6 FD25C6 FD25T6 FD20W6 FD25W6

Item No	Part No.	Mark	Description		Req'd	Remarks : Serial No.
A1	53666-80601		WHEEL-ASSY,FRONT	ﾌﾛﾝﾄﾎｲｰﾙｱｯｾﾝ	2	[DR F] INC.1-7
1	06006-70012		TIRE,700-12-12	ﾀｲﾔ	2	[DR F]
2	06711-70012		TUBE,700-12-12T	ﾁｭｰﾌﾞ	2	[DR F]
3	06701-70012		FLAP,700-12-12F	ﾌﾗｯﾌﾟ	2	[DR F]
A2	53666-81801		RIM-ASSY,500S-12	ﾘﾑｱｯｾﾝ	2	[DR F] INC.4-7
4	NO PART NO.	#	RIM	ﾘﾑ	2	[DR F]
5	53656-82041		BAND	ﾊﾞﾝﾄﾞ	2	[DR F]
6	53656-82051		FLANGE,SIDE	ﾌﾗﾝｼﾞ	2	[DR F]
7	53656-82061		RING,LOCK	ﾘﾝｸﾞ	2	[DR F]

FIG.104 FRONT WHEEL [TJ F][TJSF][T F][TS F]

(F5024450) フロントホイール

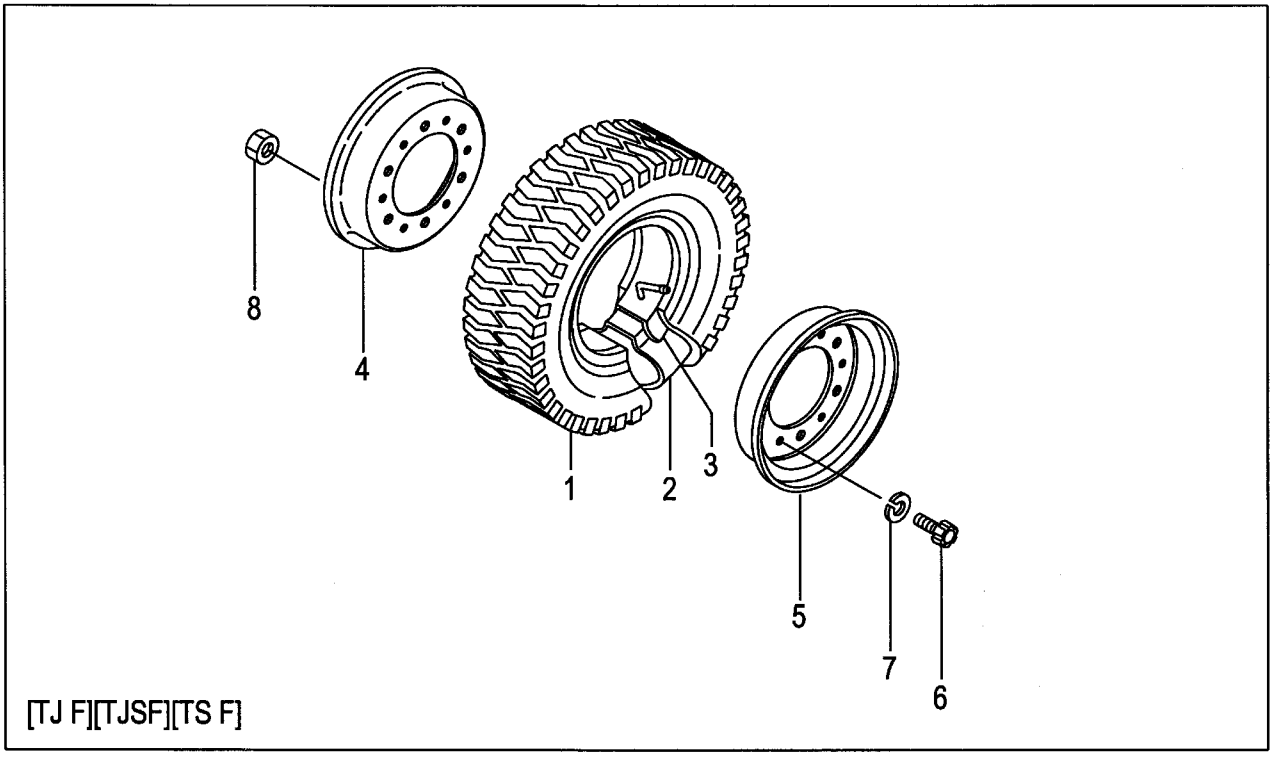

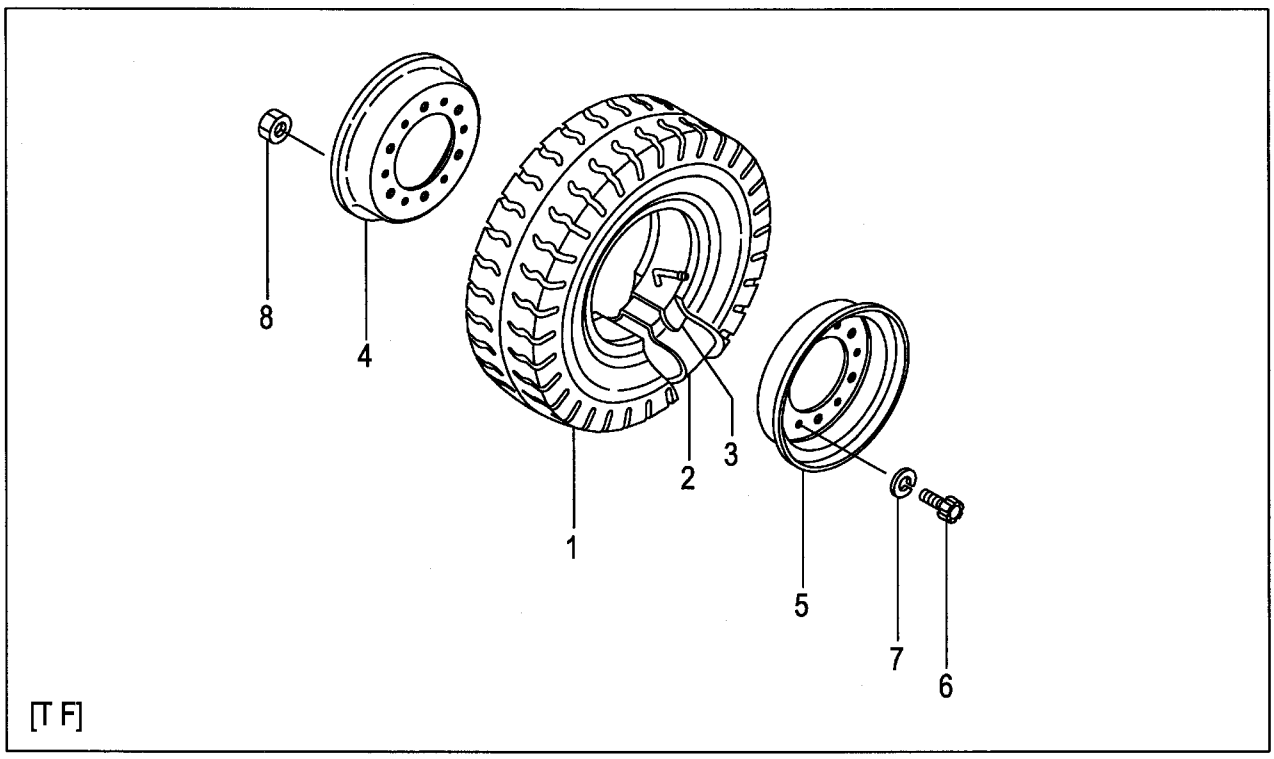

A:FG20C17 FG20T17 FG25C17 FG25T17 C:FD20C17 FD20T17 FD25C17 FD25T17
B:FG20C6 FG20T6 FG25C6 FG25T6 FG20W6 FG25W6 D:FD20C6 FD20T6 FD25C6 FD25T6 FD20W6 FD25W6

Item No	Part No.	Mark	Description		Req'd	Remarks : Serial No.
A1	53456-80902		WHEEL-ASSY,FRONT	ﾌﾛﾝﾄﾎｲｰﾙｱｯｾﾝ	2	[TJ F] INC.1-8
-	53456-80702		WHEEL-ASSY,FRONT	ﾌﾛﾝﾄﾎｲｰﾙｱｯｾﾝ	2	[TJSF] INC.1-8
-	23454-40601		WHEEL-ASSY,FRONT	ﾌﾛﾝﾄﾎｲｰﾙｱｯｾﾝ	2	[T F] INC.1-8
-	53456-80502		WHEEL-ASSY,FRONT	ﾌﾛﾝﾄﾎｲｰﾙｱｯｾﾝ	2	[TS F] INC.1-8
1	06006-70012		TIRE,700-12-12	ﾀｲﾔ	2	[TJ F]
-	06005-70012		TIRE,700-12-12	ﾀｲﾔ	2	[TJSF]
-	06001-70012		TIRE,700-12-12	ﾀｲﾔ	2	[T F]
-	06007-70012		TIRE,700-12-12	ﾀｲﾔ	2	[TS F]
2	06711-70012		TUBE,700-12-12T	ﾁｭｰﾌﾞ	2	[TJ F][TJSF][T F][TS F]
3	06701-70012		FLAP,700-12-12F	ﾌﾗｯﾌﾟ	2	[TJ F][TJSF][T F][TS F]
A2	23454-40501		RIM-ASSY,500S-12	ﾘﾑｱｯｾﾝ	2	[TJ F][TJSF][T F][TS F] INC.4-8
4	NO PART NO.	#	RIM,INSIDE	ﾘﾑ	2	[TJ F][TJSF][T F][TS F]
5	NO PART NO.	#	RIM,OUTSIDE	ﾘﾑ	2	[TJ F][TJSF][T F][TS F]
6	514A3-82601		BOLT	ﾎﾞﾙﾄ	12	[TJ F][TJSF][T F][TS F]
7	02011-00016		WASHER	ﾜｯｼｬ	12	[TJ F][TJSF][T F][TS F]
8	01400-10016		NUT	ﾅｯﾄ	12	[TJ F][TJSF][T F][TS F]

FIG.105 FRONT WHEEL [(TJ F,TJSF,T F,TS F)/DR F]

(F5024460) フロントホイール

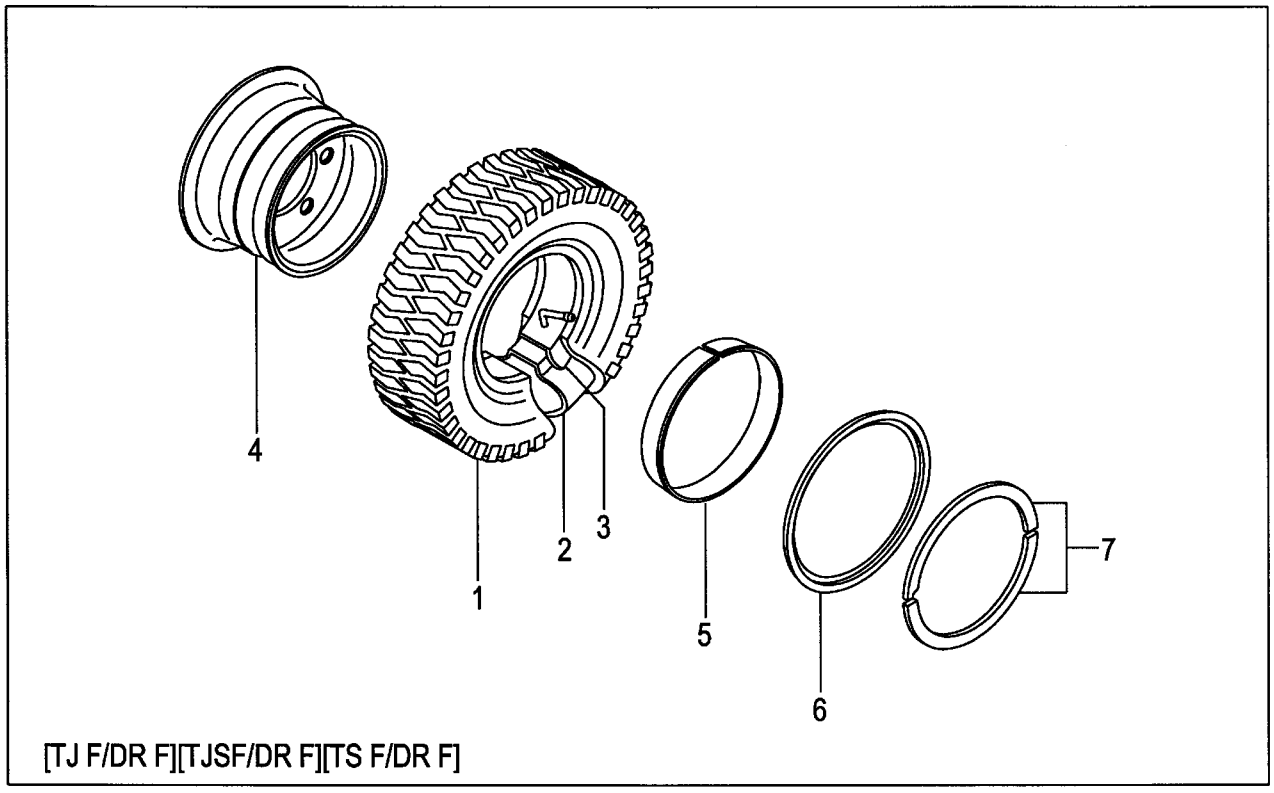

[TJ F/DR F][TJSF/DR F][TS F/DR F]

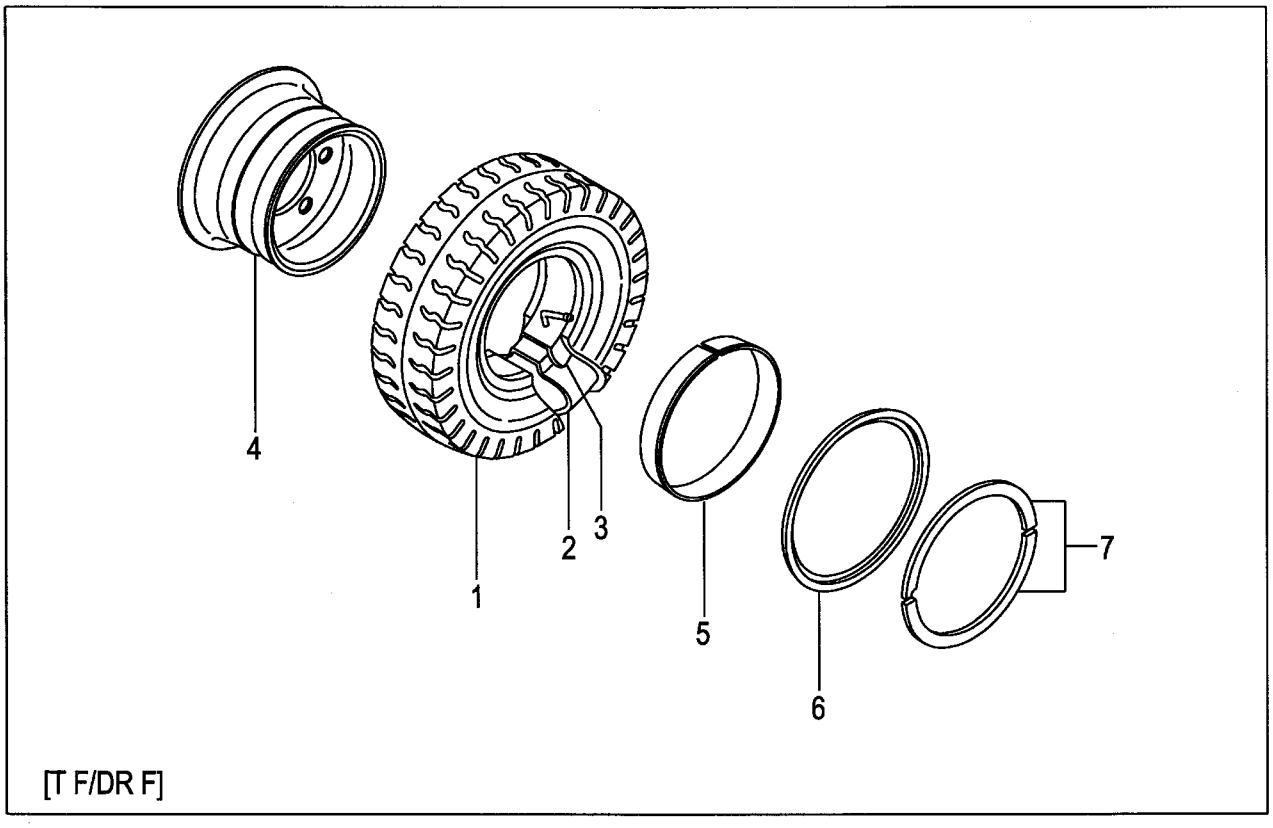

[T F/DR F]

A:FG20C17 FG20T17 FG25C17 FG25T17 C:FD20C17 FD20T17 FD25C17 FD25T17
B:FG20C6 FG20T6 FG25C6 FG25T6 FG20W6 FG25W6 D:FD20C6 FD20T6 FD25C6 FD25T6 FD20W6 FD25W6

Item No	Part No.	Mark	Description		Req'd	Remarks : Serial No.
A1	53666-80601		WHEEL-ASSY,FRONT	ﾌﾛﾝﾄﾎｲｰﾙｱｯｾﾝ	2	[TJ F/DR F] INC.1-7
-	53666-80501		WHEEL-ASSY,FRONT	ﾌﾛﾝﾄﾎｲｰﾙｱｯｾﾝ	2	[TJSF/DR F] INC.1-7
-	53666-80201		WHEEL-ASSY,FRONT	ﾌﾛﾝﾄﾎｲｰﾙｱｯｾﾝ	2	[T F/DR F] INC.1-7
-	53666-80701		WHEEL-ASSY,FRONT	ﾌﾛﾝﾄﾎｲｰﾙｱｯｾﾝ	2	[TS F/DR F] INC.1-7
1	06006-70012		TIRE,700-12-12	ﾀｲﾔ	2	[TJ F/DR F]
-	06005-70012		TIRE,700-12-12	ﾀｲﾔ	2	[TJSF/DR F]
-	06001-70012		TIRE,700-12-12	ﾀｲﾔ	2	[T F/DR F]
-	06007-70012		TIRE,700-12-12	ﾀｲﾔ	2	[TS F/DR F]
2	06711-70012		TUBE,700-12-12T	ﾁｭｰﾌﾞ	2	[TJ F/DR F][TJSF/DR F]
						[T F/DR F][TS F/DR F]
3	06701-70012		FLAP,700-12-12F	ﾌﾗｯﾌﾟ	2	[TJ F/DR F][TJSF/DR F]
						[T F/DR F][TS F/DR F]
A2	53666-81801		RIM-ASSY,500S-12	ﾘﾑｱｯｾﾝ	2	[TJ F/DR F][T F/DR F] INC.4-7
-	53666-81801		RIM-ASSY,500S-12	ﾘﾑｱｯｾﾝ	2	[TJSF/DR F][TS F/DR F] INC.4-7
4	NO PART NO.	#	RIM	ﾘﾑ	2	[TJ F/DR F][TJSF/DR F]
						[T F/DR F][TS F/DR F]
5	53656-82041		BAND	ﾊﾞﾝﾄﾞ	2	[TJ F/DR F][TJSF/DR F]
						[T F/DR F][TS F/DR F]
6	53656-82051		FLANGE,SIDE	ﾌﾗﾝｼﾞ	2	[TJ F/DR F][TJSF/DR F]
						[T F/DR F][TS F/DR F]
7	53656-82061		RING,LOCK	ﾘﾝｸﾞ	2	[TJ F/DR F][TJSF/DR F]
						[T F/DR F][TS F/DR F]

FIG.106 FRONT WHEEL [TUJF][TUSF][TUWF][TUGF]

(F5024470) フロントホイール

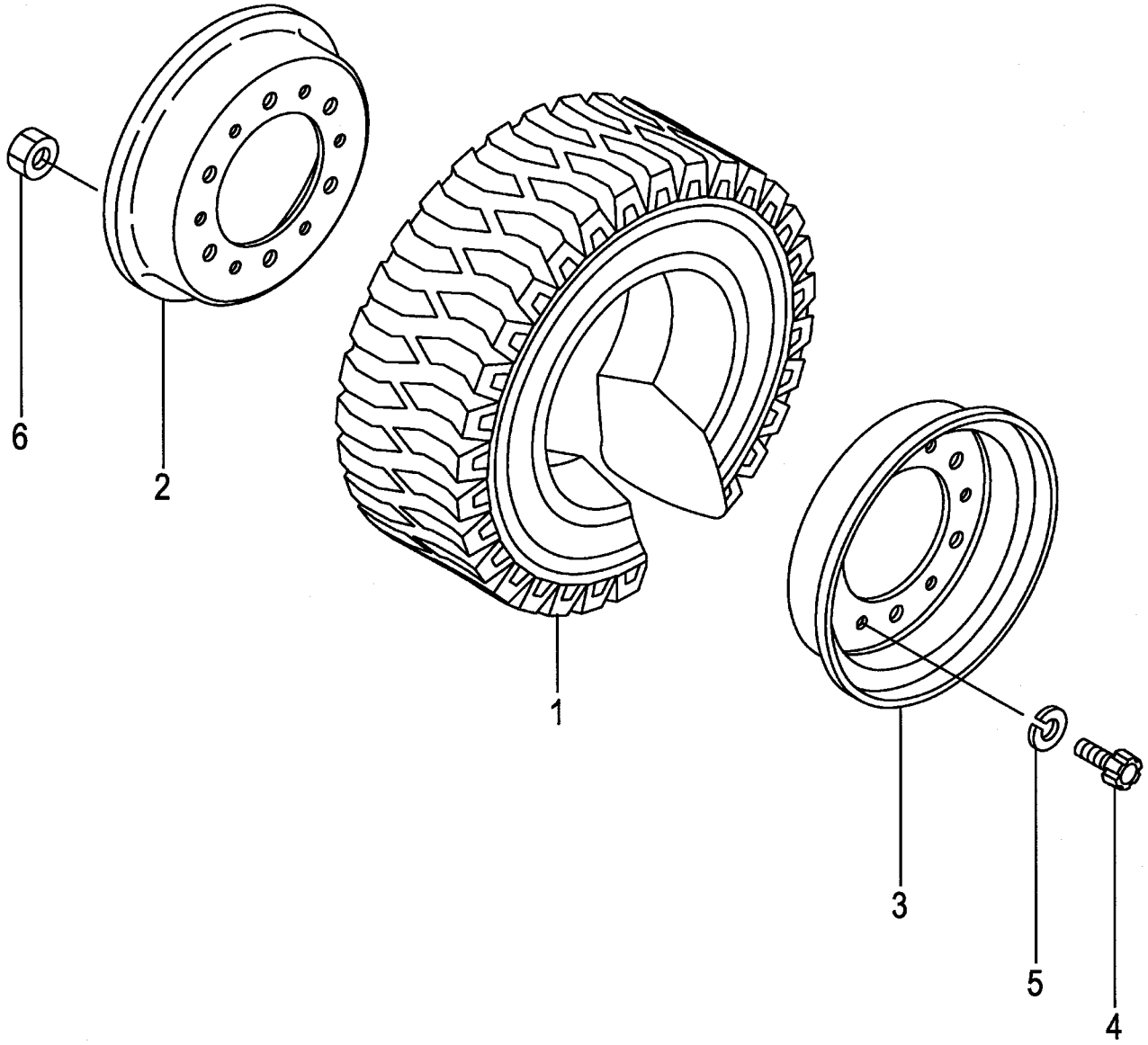

A:FG20C17 FG20T17 FG25C17 FG25T17 D:FD20C17 FD20T17 FD25C17 FD25T17
B:FG20C6 FG20T6 FG25C6 FG25T6 E:FD20C6 FD20T6 FD25C6 FD25T6
C:FG20W6 FG25W6 F:FD20W6 FD25W6

FIG.106
(F5024470)

Item No	Part No.	Mark	Description		Req'd	Remarks : Serial No.
A1	539A6-80201		WHEEL-ASSY,FRONT	ﾌﾛﾝﾄﾎｲｰﾙｱｯｾﾝ	2	[TSUF] INC.1-6
-	52676-80601		WHEEL-ASSY,FRONT	ﾌﾛﾝﾄﾎｲｰﾙｱｯｾﾝ	2	[TUJF] INC.1-6
-	52676-80601		WHEEL-ASSY,FRONT	ﾌﾛﾝﾄﾎｲｰﾙｱｯｾﾝ	2	[TUJF] INC.1-6
-	522A3-80401		WHEEL-ASSY,FRONT	ﾌﾛﾝﾄﾎｲｰﾙｱｯｾﾝ	2	[TUJF] INC.1-6
-	522A3-80401		WHEEL-ASSY,FRONT	ﾌﾛﾝﾄﾎｲｰﾙｱｯｾﾝ	2	B,E [TUJF/EX] INC.1-6
-	522A6-80221		WHEEL-ASSY,FRONT	ﾌﾛﾝﾄﾎｲｰﾙｱｯｾﾝ	2	[TUSF] INC.1-6
-	522A6-80201		WHEEL-ASSY,FRONT	ﾌﾛﾝﾄﾎｲｰﾙｱｯｾﾝ	2	[TUWF] INC.1-6
-	522A6-80211		WHEEL-ASSY,FRONT	ﾌﾛﾝﾄﾎｲｰﾙｱｯｾﾝ	2	[TUGF] INC.1-6
1	06807-70012		TIRE,SNOW,700-12	ﾀｲﾔ	2	[TSUF]
-	06806-70012		TIRE,UNIQUE,700-12	ﾀｲﾔ	2	[TUJF]
-	06806-70012		TIRE,UNIQUE,700-12	ﾀｲﾔ	2	[TUJF]
-	06807-70012		TIRE,UNIQUE,700-12	ﾀｲﾔ	2	[TUJF]
-	06807-70012		TIRE,UNIQUE,700-12	ﾀｲﾔ	2	B,E [TUJF/EX]
-	06851-70012		TIRE,SOFTONE,700-12	ﾀｲﾔ	2	[TUSF]
-	06841-70012		TIRE,WHITE,700-12	ﾀｲﾔ	2	[TUWF]
-	06843-70012		TIRE,GREEN,700-12	ﾀｲﾔ	2	[TUGF]
A2	23454-40501		RIM-ASSY,500S-12	ﾘﾑｱｯｾﾝ	2	[TSUF][TUJF][TUSF][TUWF] [TUGF] INC.2-6
2	NO PART NO.	#	RIM,INSIDE	ﾘﾑ	2	[TSUF][TUJF][TUSF][TUWF] [TUGF]
3	NO PART NO.	#	RIM,OUTSIDE	ﾘﾑ	2	[TSUF][TUJF][TUSF][TUWF] [TUGF]
4	514A3-82601		BOLT	ﾎﾞﾙﾄ	12	[TSUF][TUJF][TUSF][TUWF] [TUGF]
5	02011-00016		WASHER	ﾜｯｼｬ	12	[TSUF][TUJF][TUSF][TUWF] [TUGF]
6	01400-10016		NUT	ﾅｯﾄ	12	[TSUF][TUJF][TUSF][TUWF] [TUGF]

FIG.107 FRONT WHEEL [TUJF/DR F]

(F5024480) フロントホイール

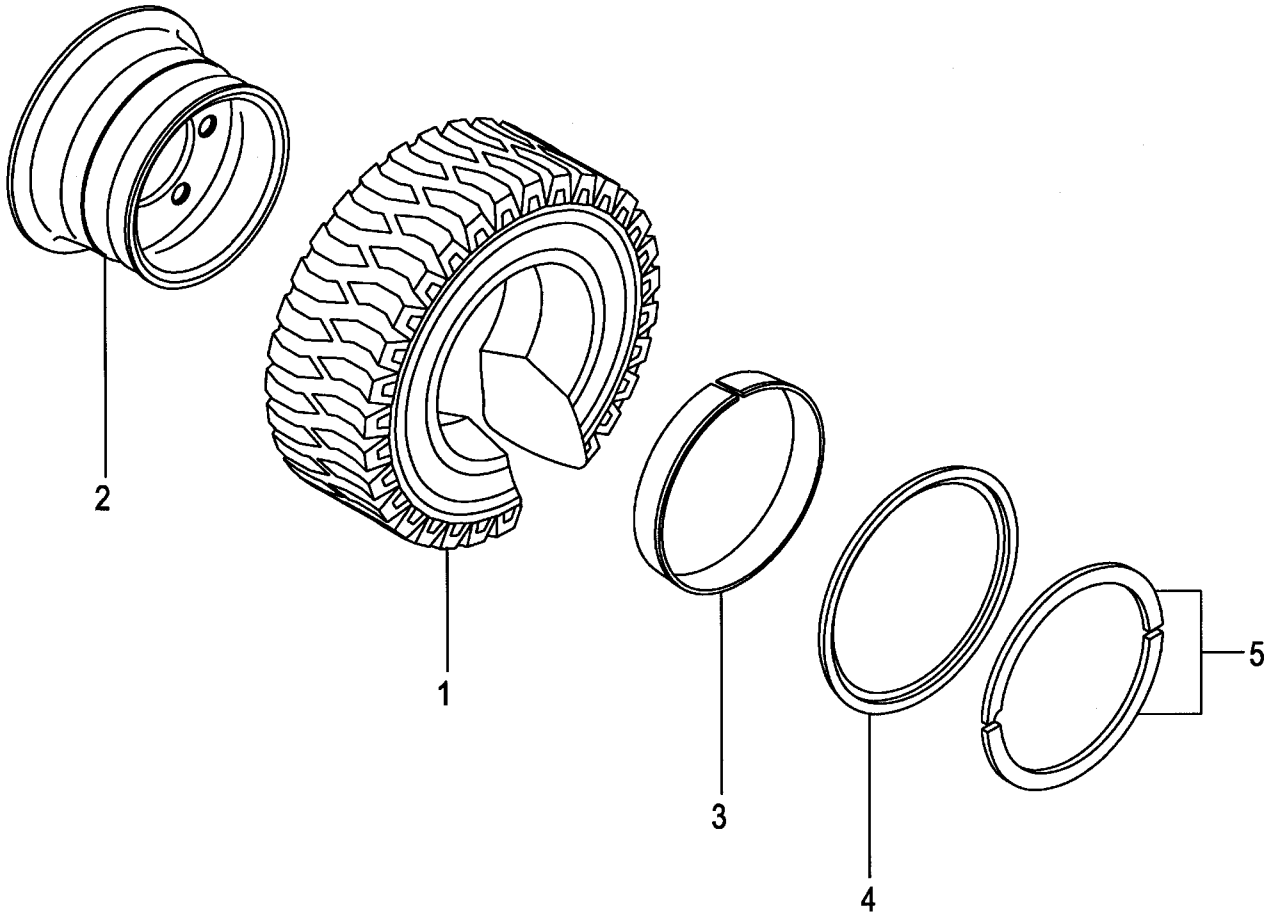

A:FG20C17 FG20T17 FG25C17 FG25T17 C:FD20C17 FD20T17 FD25C17 FD25T17
B:FG20C6 FG20T6 FG25C6 FG25T6 FG20W6 FG25W6 D:FD20C6 FD20T6 FD25C6 FD25T6 FD20W6 FD25W6

Item No	Part No.	Mark	Description		Req'd	Remarks : Serial No.
A1	53666-80401		WHEEL-ASSY,FRONT	ﾌﾛﾝﾄﾎｲｰﾙｱｯｾﾝ	2	[TUJF/DR F] INC.1-5
1	06806-70012		TIRE,UNIQUE,700-12	ﾀｲﾔ	2	[TUJF/DR F]
A2	53666-81801		RIM-ASSY,500S-12	ﾘﾑｱｯｾﾝ	2	[TUJF/DR F] INC.2-5
2	NO PART NO.	#	RIM	ﾘﾑ	2	[TUJF/DR F]
3	53656-82041		BAND	ﾊﾞﾝﾄﾞ	2	[TUJF/DR F]
4	53656-82051		FLANGE,SIDE	ﾌﾗﾝｼﾞ	2	[TUJF/DR F]
5	53656-82061		RING,LOCK	ﾘﾝｸﾞ	2	[TUJF/DR F]

FIG.108 FRONT WHEEL [TRAF]

(F5024490) フロントホイール

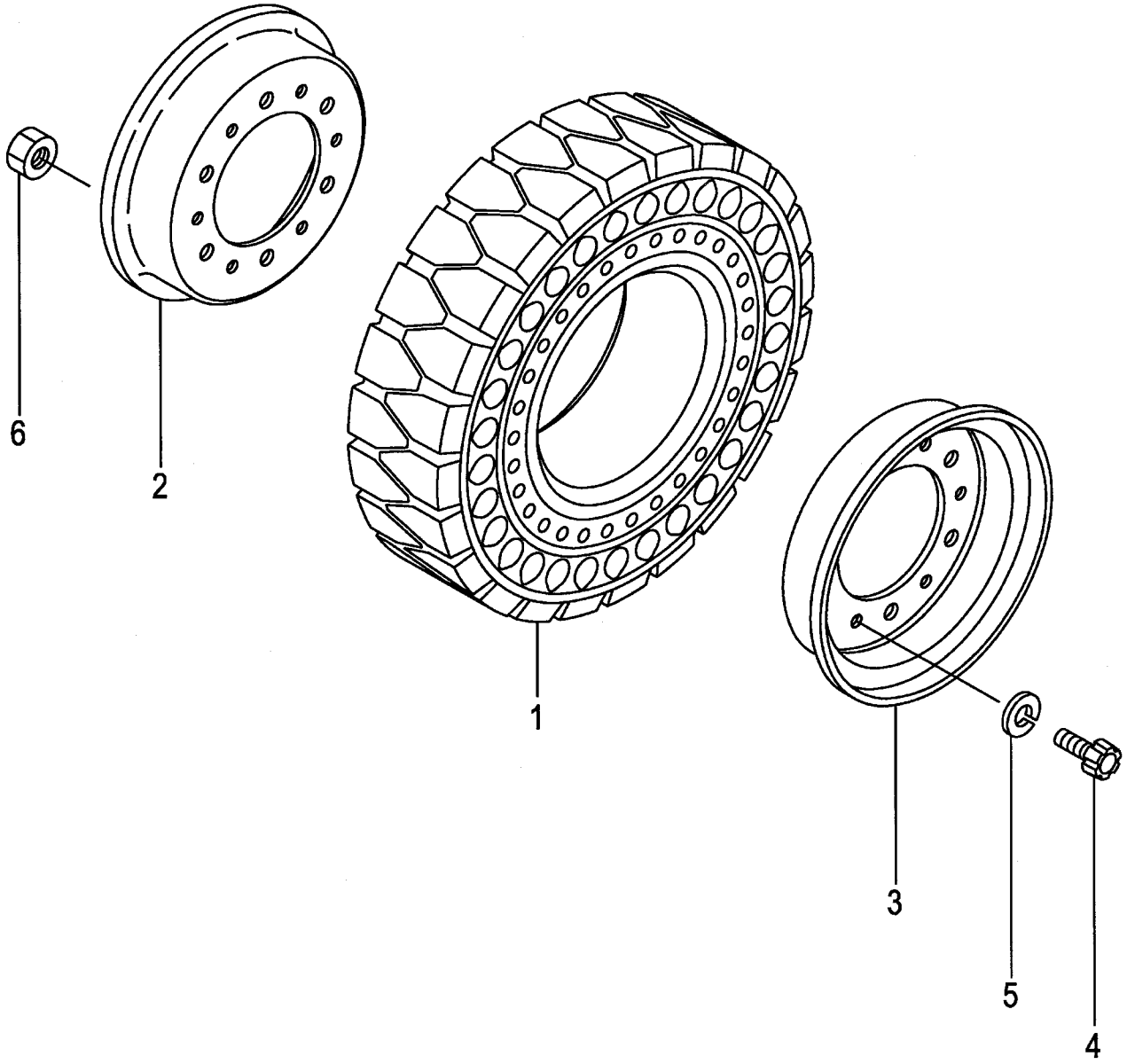

A:FG20C17 FG20T17 FG25C17 FG25T17 C:FD20C17 FD20T17 FD25C17 FD25T17
B:FG20C6 FG20T6 FG25C6 FG25T6 FG20W6 FG25W6 D:FD20C6 FD20T6 FD25C6 FD25T6 FD20W6 FD25W6

Item No	Part No.	Mark	Description		Req'd	Remarks : Serial No.
A1	534A6-80171		WHEEL-ASSY,FRONT	ﾌﾛﾝﾄﾎｲｰﾙｱｯｾﾝ	2	[TRAF] INC.1-6
1	534A6-85011		TIRE,AIR-BOSS,700-12	ﾀｲﾔ	2	[TRAF]
A2	23454-40501		RIM-ASSY,500S-12	ﾘﾑｱｯｾﾝ	2	[TRAF] INC.2-6
2	NO PART NO.	#	RIM,INSIDE	ﾘﾑ	2	[TRAF]
3	NO PART NO.	#	RIM,OUTSIDE	ﾘﾑ	2	[TRAF]
4	514A3-82601		BOLT	ﾎﾞﾙﾄ	12	[TRAF]
5	02011-00016		WASHER	ﾜｯｼｬ	12	[TRAF]
6	01400-10016		NUT	ﾅｯﾄ	12	[TRAF]

FIG.109 FRONT WHEEL [TUJSF]

(F50244A0) フロントホイール

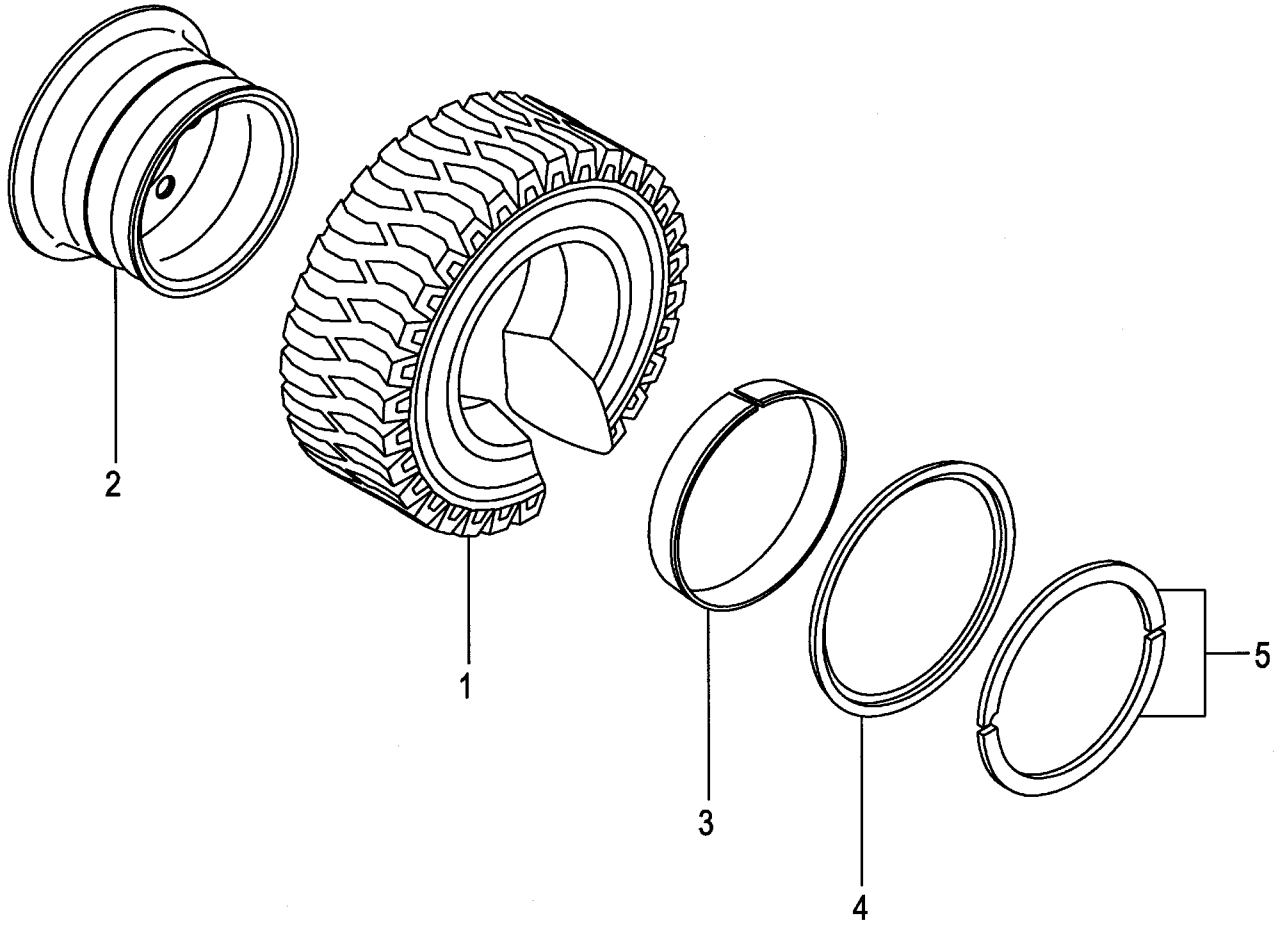

A:FG20C17 FG20T17 FG25C17 FG25T17 C:FD20C17 FD20T17 FD25C17 FD25T17
B:FG20C6 FG20T6 FG25C6 FG25T6 FG20W6 FG25W6 D:FD20C6 FD20T6 FD25C6 FD25T6 FD20W6 FD25W6

Item No	Part No.	Mark	Description		Req'd	Remarks : Serial No.
A1	62156-52501		WHEEL-ASSY,FRONT	ﾌﾛﾝﾄﾎｲｰﾙｱｯｾﾝ	2	[TUJSF] INC.1-5
1	06804-70012		TIRE,UNIQUE,700-12	ﾀｲﾔ	2	[TUJSF]
A2	22854-40201		RIM-ASSY,500S-12	ﾘﾑｱｯｾﾝ	2	[TUJSF] INC.2-5
2	NO PART NO.	#	RIM	ﾘﾑ	2	[TUJSF]
3	53656-82041		BAND	ﾊﾞﾝﾄﾞ	2	[TUJSF]
4	53656-82051		FLANGE,SIDE	ﾌﾗﾝｼﾞ	2	[TUJSF]
5	53656-82061		RING,LOCK	ﾘﾝｸﾞ	2	[TUJSF]

FIG.110 FRONT WHEEL [TJ W][TJSW][T W][TS W]

(F50244B0) フロントホイール

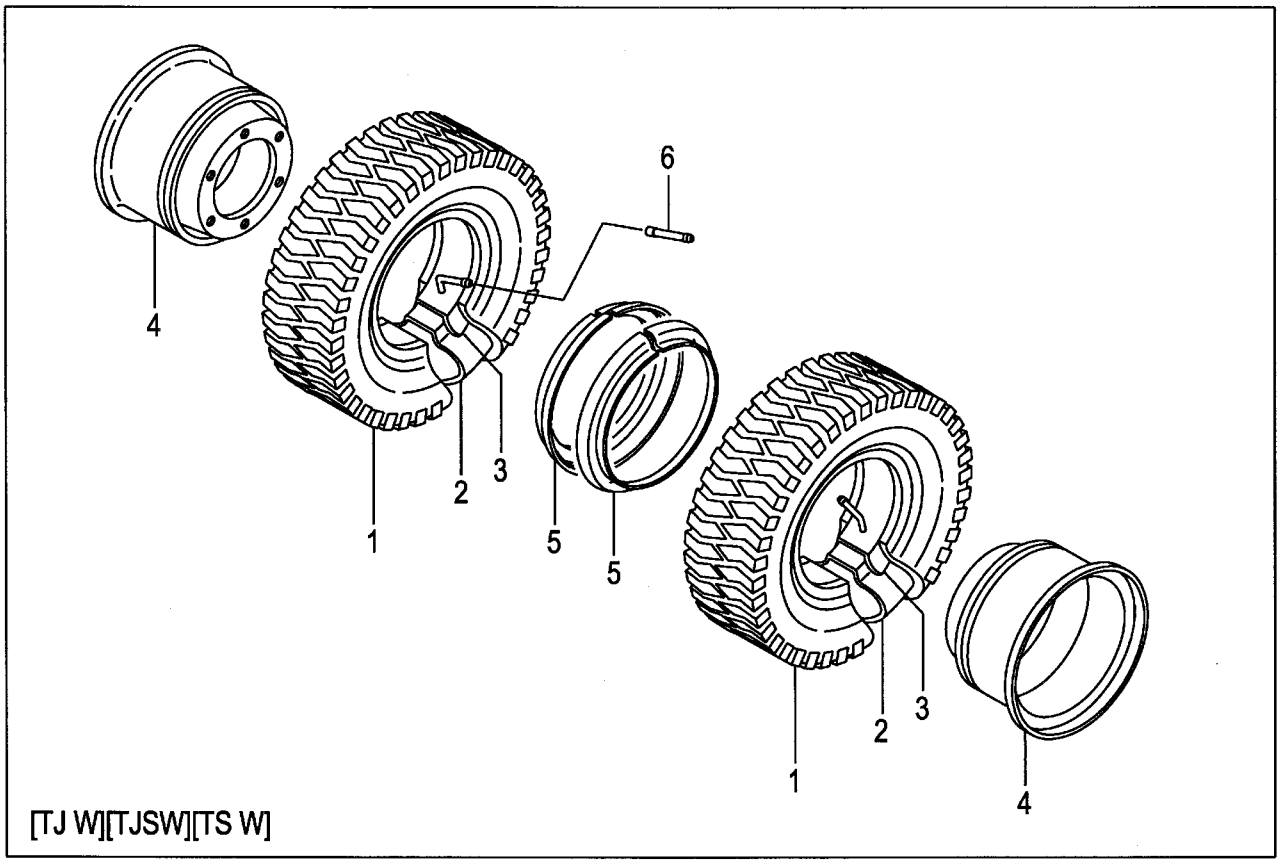

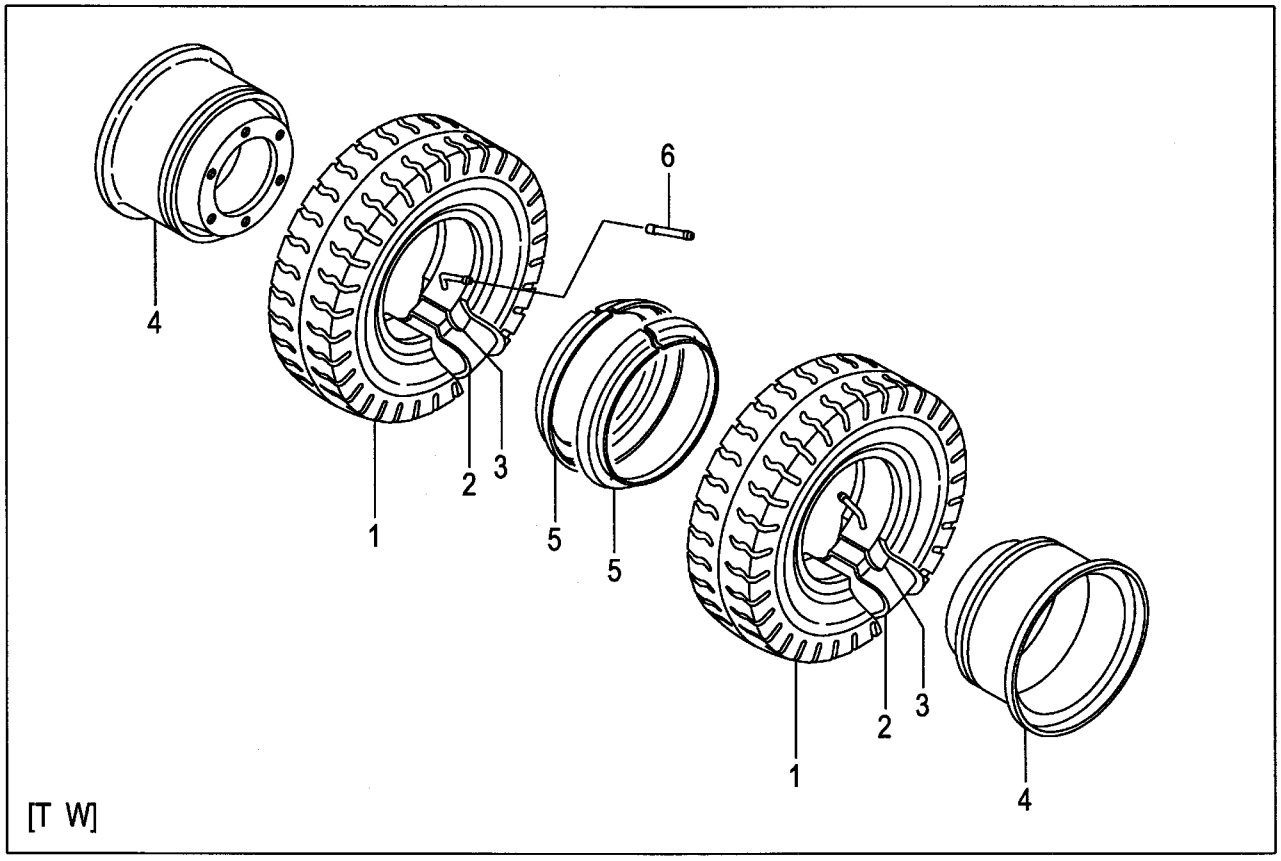

A:FG20C17 FG20T17 FG25C17 FG25T17 C:FD20C17 FD20T17 FD25C17 FD25T17
B:FG20C6 FG20T6 FG25C6 FG25T6 FG20W6 FG25W6 D:FD20C6 FD20T6 FD25C6 FD25T6 FD20W6 FD25W6

Item No	Part No.	Mark	Description		Req'd	Remarks : Serial No.
A1	52676-80402		WHEEL-ASSY,FRONT	ﾌﾛﾝﾄﾎｲｰﾙｱｯｾﾝ	4	[TJ W] INC.1-5
-	52676-80202		WHEEL-ASSY,FRONT	ﾌﾛﾝﾄﾎｲｰﾙｱｯｾﾝ	4	[TJSW] INC.1-5
-	53457-40003		WHEEL-ASSY,FRONT	ﾌﾛﾝﾄﾎｲｰﾙｱｯｾﾝ	4	[T W] INC.1-5
-	52676-80302		WHEEL-ASSY,FRONT	ﾌﾛﾝﾄﾎｲｰﾙｱｯｾﾝ	4	[TS W] INC.1-5
1	06006-55015		TIRE,550-15-8	ﾀｲﾔ	4	[TJ W]
-	06005-55015		TIRE,550-15-8	ﾀｲﾔ	4	[TJSW]
-	06001-55015		TIRE,550-15-8	ﾀｲﾔ	4	[T W]
-	06007-55015		TIRE,550-15-8	ﾀｲﾔ	4	[TS W]
2	06711-55015		TUBE,550-15-8T	ﾁｭｰﾌﾞ	4	[TJ W][TJSW][T W][TS W]
3	06701-55015		FLAP,550-15-8F	ﾌﾗｯﾌﾟ	4	[TJ W][TJSW][T W][TS W]
A2	53657-42053		RIM-ASSY,450E-15	ﾘﾑｱｯｾﾝ	4	[TJ W][TJSW][T W][TS W] INC.4,5
4	NO PART NO.	#	RIM & DISK	ﾘﾑ & ﾃﾞｨｽｸ	4	[TJ W][TJSW][T W][TS W]
5	53457-42151		RING,SIDE	ﾘﾝｸﾞ	4	[TJ W][TJSW][T W][TS W]
6	06731-00120		TUBE,EXTENSION	ﾁｭｰﾌﾞ	2	[TJ W][TJSW][T W][TS W]

FIG.111 FRONT WHEEL [TUJW][TUSW][TUWW][TUGW]

(F50244C0) フロントホイール

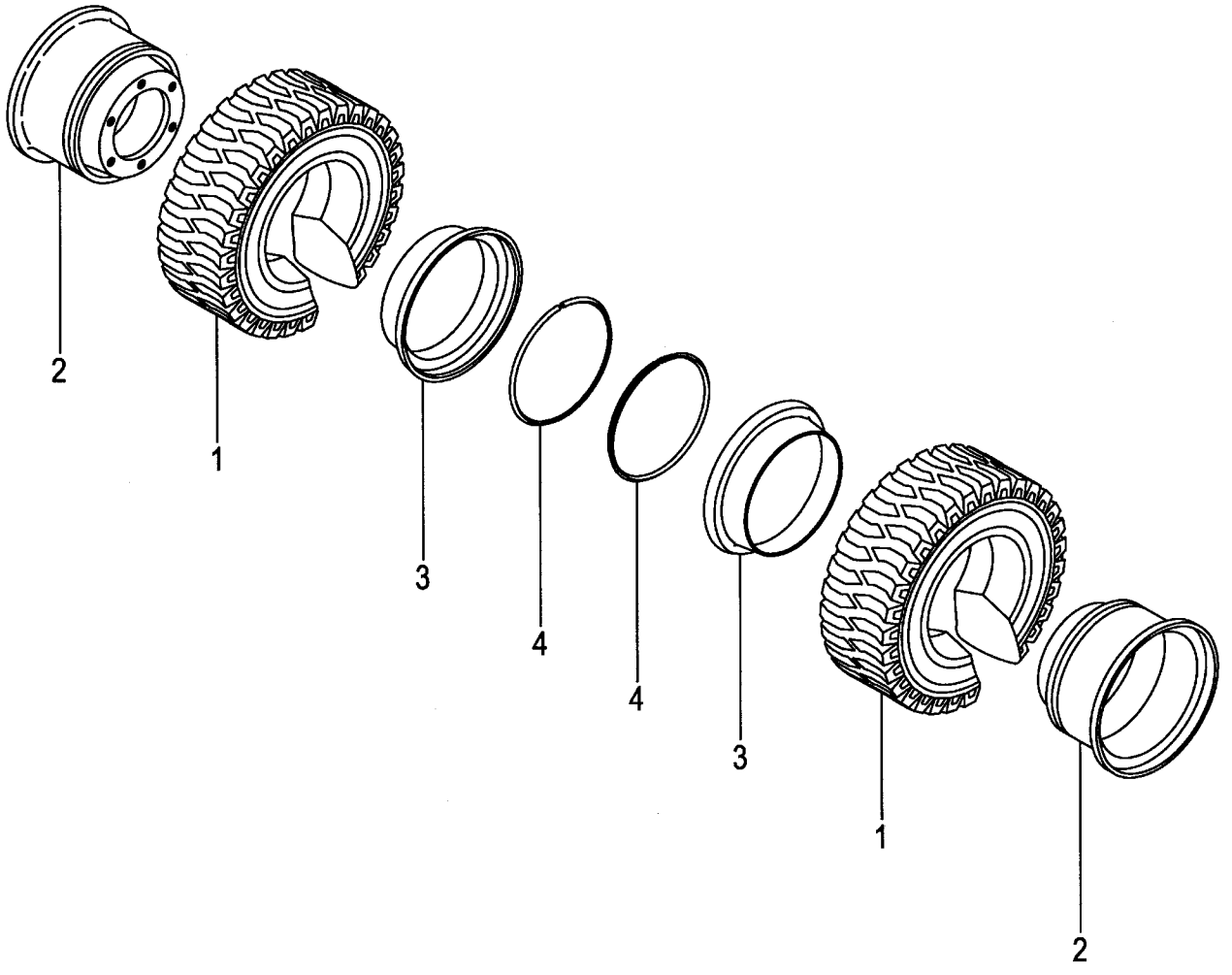

A:FG20C17 FG20T17 FG25C17 FG25T17 C:FD20C17 FD20T17 FD25C17 FD25T17
B:FG20C6 FG20T6 FG25C6 FG25T6 FG20W6 FG25W6 D:FD20C6 FD20T6 FD25C6 FD25T6 FD20W6 FD25W6

Item No	Part No.	Mark	Description		Req'd	Remarks : Serial No.
A1	52676-80802		WHEEL-ASSY,FRONT	ﾌﾛﾝﾄﾎｲｰﾙｱｯｾﾝ	4	[TUJW] INC.1-4
-	522A6-80321		WHEEL-ASSY,FRONT	ﾌﾛﾝﾄﾎｲｰﾙｱｯｾﾝ	4	[TUSW] INC.1-4
-	522A6-80301		WHEEL-ASSY,FRONT	ﾌﾛﾝﾄﾎｲｰﾙｱｯｾﾝ	4	[TUWW] INC.1-4
-	522A6-80311		WHEEL-ASSY,FRONT	ﾌﾛﾝﾄﾎｲｰﾙｱｯｾﾝ	4	[TUGW] INC.1-4
1	06806-55015		TIRE,UNIQUE,550-15	ﾀｲﾔ	4	[TUJW]
-	06851-55015		TIRE,SOFTONE,550-15	ﾀｲﾔ	4	[TUSW]
-	06841-55015		TIRE,WHITE,550-15	ﾀｲﾔ	4	[TUWW]
-	06843-55015		TIRE,GREEN,550-15	ﾀｲﾔ	4	[TUGW]
A2	53656-82001		RIM-ASSY,450E-15	ﾘﾑｱｯｾﾝ	4	[TUJW][TUSW][TUWW][TUGW] INC.2-4
2	NO PART NO.	#	RIM	ﾘﾑ	4	[TUJW][TUSW][TUWW][TUGW]
3	53456-82052		RING,SIDE	ﾘﾝｸﾞ	4	[TUJW][TUSW][TUWW][TUGW]
4	53456-82062		RING,LOCK	ﾘﾝｸﾞ	4	[TUJW][TUSW][TUWW][TUGW]

FIG.112 FRONT WHEEL [TJ W70][TJSW70][T W70][TS W70]

(F50244D0) フロントホイール

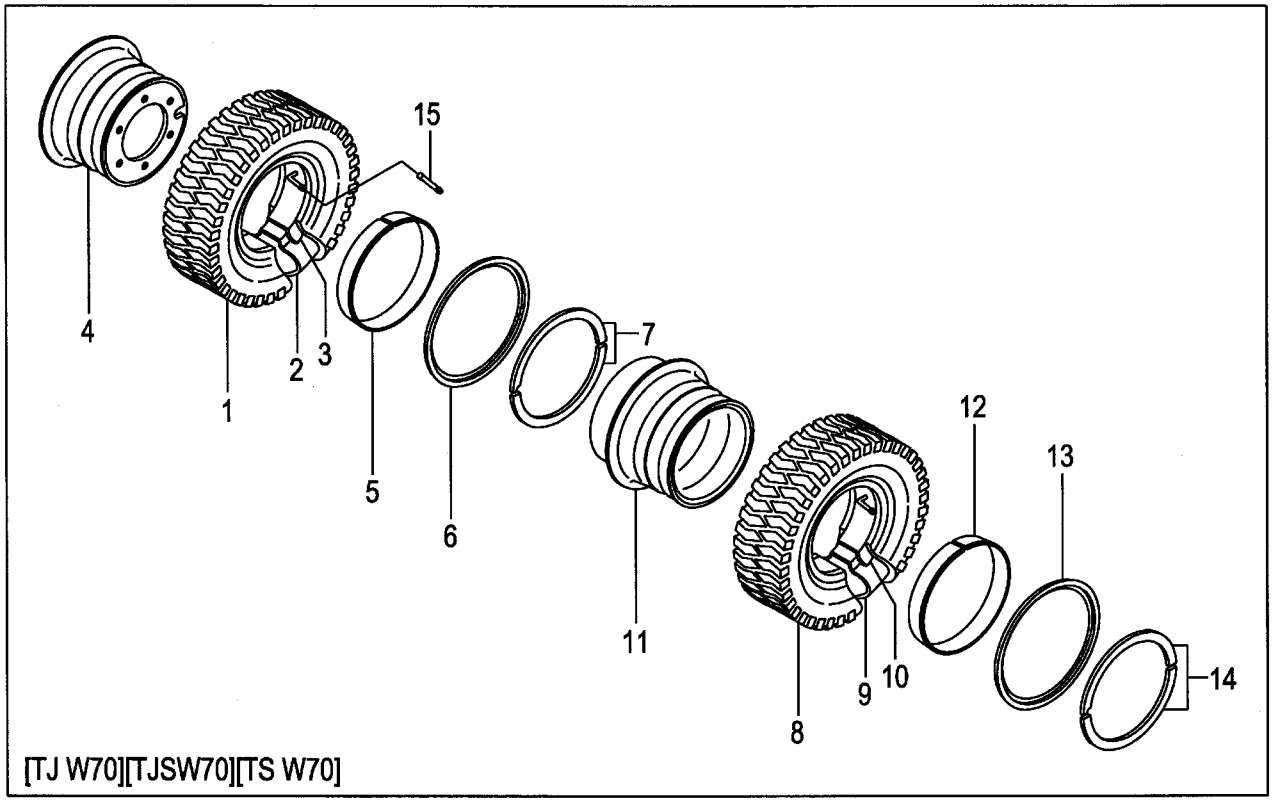

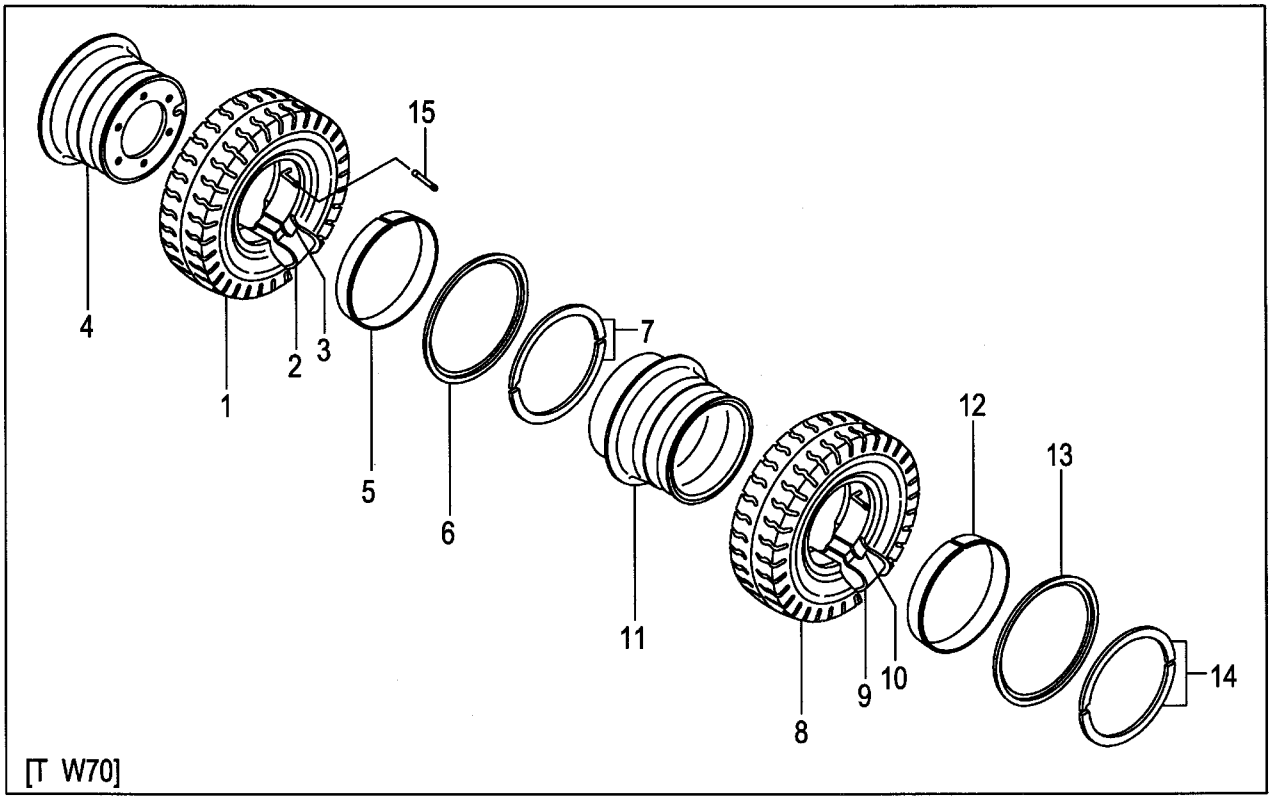

A:FG20C17 FG20T17 FG25C17 FG25T17 C:FD20C17 FD20T17 FD25C17 FD25T17
B:FG20C6 FG20T6 FG25C6 FG25T6 FG20W6 FG25W6 D:FD20C6 FD20T6 FD25C6 FD25T6 FD20W6 FD25W6

Item No	Part No.	Mark	Description		Req'd	Remarks : Serial No.
A1	53656-80601		WHEEL-ASSY,FRONT	ﾌﾛﾝﾄﾎｲｰﾙｱｯｾﾝ	2	[TJ W70] INC.1-7
-	53656-80501		WHEEL-ASSY,FRONT	ﾌﾛﾝﾄﾎｲｰﾙｱｯｾﾝ	2	[TJSW70] INC.1-7
-	53656-80201		WHEEL-ASSY,FRONT	ﾌﾛﾝﾄﾎｲｰﾙｱｯｾﾝ	2	[T W70] INC.1-7
-	53656-80701		WHEEL-ASSY,FRONT	ﾌﾛﾝﾄﾎｲｰﾙｱｯｾﾝ	2	[TS W70] INC.1-7
1	06006-70012		TIRE,700-12-12	ﾀｲﾔ	2	[TJ W70]
-	06005-70012		TIRE,700-12-12	ﾀｲﾔ	2	[TJSW70]
-	06001-70012		TIRE,700-12-12	ﾀｲﾔ	2	[T W70]
-	06007-70012		TIRE,700-12-12	ﾀｲﾔ	2	[TS W70]
2	06711-70012		TUBE,700-12-12T	ﾁｭｰﾌﾞ	2	[TJ W70][TJSW70][T W70] [TS W70]
3	06701-70012		FLAP,700-12-12F	ﾌﾗｯﾌﾟ	2	[TJ W70][TJSW70][T W70] [TS W70]
A2	53656-80901		RIM-ASSY,500S-12TD	ﾘﾑｱｯｾﾝ	2	[TJ W70][TJSW70][T W70] [TS W70] INC.4-7
4	NO PART NO.	#	RIM	ﾘﾑ	2	[TJ W70][TJSW70][T W70] [TS W70]
5	53656-82041		BAND	ﾊﾞﾝﾄﾞ	2	[TJ W70][TJSW70][T W70] [TS W70]
6	53656-82051		FLANGE,SIDE	ﾌﾗﾝｼﾞ	2	[TJ W70][TJSW70][T W70] [TS W70]
7	53656-82061		RING,LOCK	ﾘﾝｸﾞ	2	[TJ W70][TJSW70][T W70] [TS W70]
A3	53656-80611		WHEEL-ASSY,FRONT	ﾌﾛﾝﾄﾎｲｰﾙｱｯｾﾝ	2	[TJ W70] INC.8-14
-	53656-80511		WHEEL-ASSY,FRONT	ﾌﾛﾝﾄﾎｲｰﾙｱｯｾﾝ	2	[TJSW70] INC.8-14
-	53656-80211		WHEEL-ASSY,FRONT	ﾌﾛﾝﾄﾎｲｰﾙｱｯｾﾝ	2	[T W70] INC.8-14
-	53656-80711		WHEEL-ASSY,FRONT	ﾌﾛﾝﾄﾎｲｰﾙｱｯｾﾝ	2	[TS W70] INC.8-14
8	06006-70012		TIRE,700-12-12	ﾀｲﾔ	2	[TJ W70]
-	06005-70012		TIRE,700-12-12	ﾀｲﾔ	2	[TJSW70]
-	06001-70012		TIRE,700-12-12	ﾀｲﾔ	2	[T W70]
-	06007-70012		TIRE,700-12-12	ﾀｲﾔ	2	[TS W70]
9	06711-70012		TUBE,700-12-12T	ﾁｭｰﾌﾞ	2	[TJ W70][TJSW70][T W70] [TS W70]
10	06701-70012		FLAP,700-12-12F	ﾌﾗｯﾌﾟ	2	[TJ W70][TJSW70][T W70] [TS W70]
A4	53656-80911		RIM-ASSY,500S-12TD	ﾘﾑｱｯｾﾝ	2	[TJ W70][TJSW70][T W70] [TS W70] INC.11-14
11	NO PART NO.	#	RIM	ﾘﾑ	2	[TJ W70][TJSW70][T W70] [TS W70]
12	53656-82041		BAND	ﾊﾞﾝﾄﾞ	2	[TJ W70][TJSW70][T W70] [TS W70]
13	53656-82051		FLANGE,SIDE	ﾌﾗﾝｼﾞ	2	[TJ W70][TJSW70][T W70] [TS W70]
14	53656-82061		RING,LOCK	ﾘﾝｸﾞ	2	[TJ W70][TJSW70][T W70] [TS W70]
15	06731-00120		TUBE,EXTENSION	ﾁｭｰﾌﾞ	2	[TJ W70][TJSW70][T W70] [TS W70]

FIG.113 FRONT WHEEL [TUJW70][TUSW70][TUWW70][TUGW70]

(F50244E0) フロントホイール

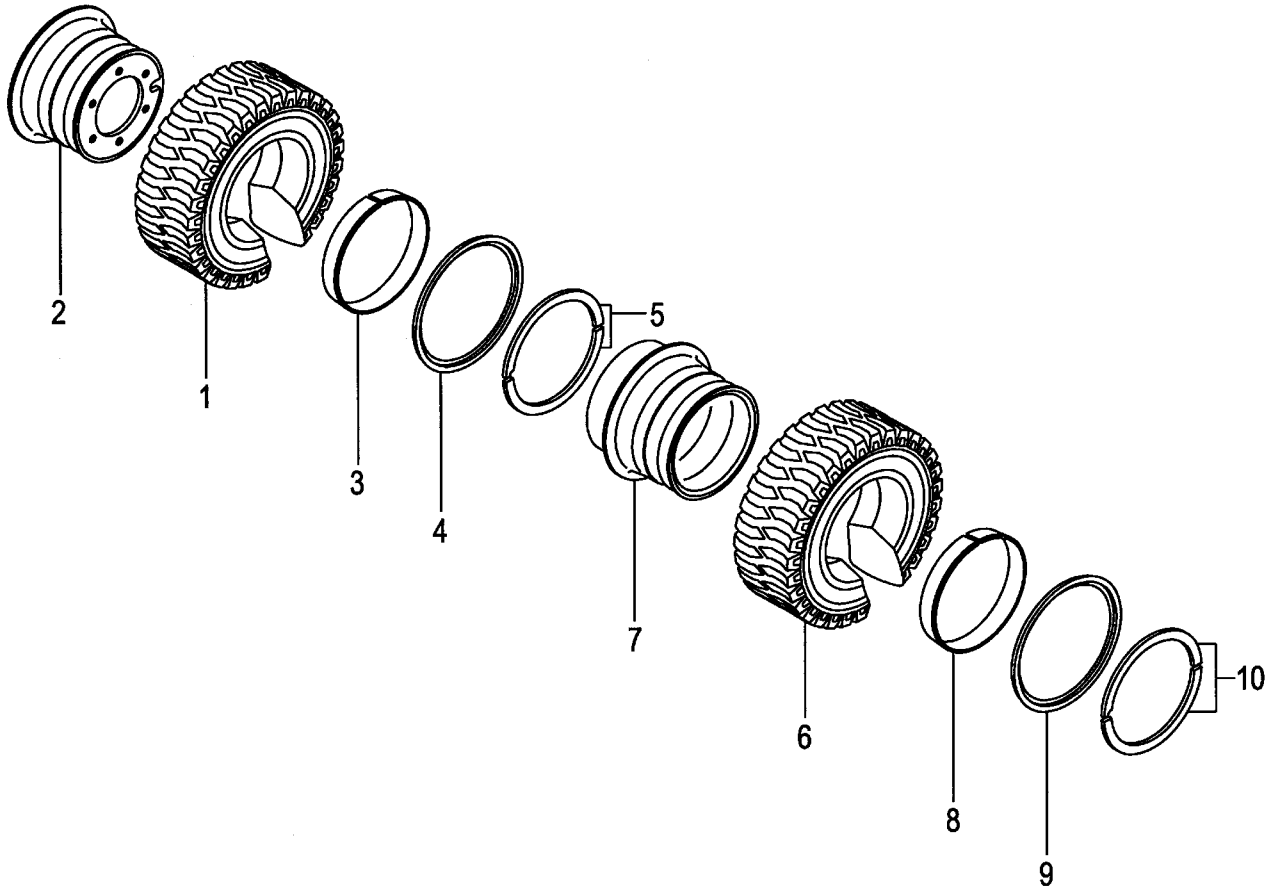

A:FG20C17 FG20T17 FG25C17 FG25T17 C:FD20C17 FD20T17 FD25C17 FD25T17
B:FG20C6 FG20T6 FG25C6 FG25T6 FG20W6 FG25W6 D:FD20C6 FD20T6 FD25C6 FD25T6 FD20W6 FD25W6

Item No	Part No.	Mark	Description		Req'd	Remarks : Serial No.
A1	53656-80401		WHEEL-ASSY,FRONT	ﾌﾛﾝﾄﾎｲｰﾙｱｯｾﾝ	2	[TUJW70] INC.1-5
-	522A6-80441		WHEEL-ASSY,FRONT	ﾌﾛﾝﾄﾎｲｰﾙｱｯｾﾝ	2	[TUSW70] INC.1-5
-	522A6-80401		WHEEL-ASSY,FRONT	ﾌﾛﾝﾄﾎｲｰﾙｱｯｾﾝ	2	[TUWW70] INC.1-5
-	522A6-80421		WHEEL-ASSY,FRONT	ﾌﾛﾝﾄﾎｲｰﾙｱｯｾﾝ	2	[TUGW70] INC.1-5
1	06806-70012		TIRE,UNIQUE,700-12	ﾀｲﾔ	2	[TUJW70]
-	06851-70012		TIRE,SOFTONE,700-12	ﾀｲﾔ	2	[TUSW70]
-	06841-70012		TIRE,WHITE,700-12	ﾀｲﾔ	2	[TUWW70]
-	06843-70012		TIRE,GREEN,700-12	ﾀｲﾔ	2	[TUGW70]
A2	53656-80901		RIM-ASSY,500S-12TD	ﾘﾑｱｯｾﾝ	2	[TUJW70][TUSW70][TUWW70] [TUGW70] INC.2-5
2	NO PART NO.	#	RIM	ﾘﾑ	2	[TUJW70][TUSW70][TUWW70] [TUGW70]
3	53656-82041		BAND	ﾊﾞﾝﾄﾞ	2	[TUJW70][TUSW70][TUWW70] [TUGW70]
4	53656-82051		FLANGE,SIDE	ﾌﾗﾝｼﾞ	2	[TUJW70][TUSW70][TUWW70] [TUGW70]
5	53656-82061		RING,LOCK	ﾘﾝｸﾞ	2	[TUJW70][TUSW70][TUWW70] [TUGW70]
A3	53656-80411		WHEEL-ASSY,FRONT	ﾌﾛﾝﾄﾎｲｰﾙｱｯｾﾝ	2	[TUJW70] INC.6-10
-	522A6-80451		WHEEL-ASSY,FRONT	ﾌﾛﾝﾄﾎｲｰﾙｱｯｾﾝ	2	[TUSW70] INC.6-10
-	522A6-80411		WHEEL-ASSY,FRONT	ﾌﾛﾝﾄﾎｲｰﾙｱｯｾﾝ	2	[TUWW70] INC.6-10
-	522A6-80431		WHEEL-ASSY,FRONT	ﾌﾛﾝﾄﾎｲｰﾙｱｯｾﾝ	2	[TUGW70] INC.6-10
6	06806-70012		TIRE,UNIQUE,700-12	ﾀｲﾔ	2	[TUJW70]
-	06851-70012		TIRE,SOFTONE,700-12	ﾀｲﾔ	2	[TUSW70]
-	06841-70012		TIRE,WHITE,700-12	ﾀｲﾔ	2	[TUWW70]
-	06843-70012		TIRE,GREEN,700-12	ﾀｲﾔ	2	[TUGW70]
A4	53656-80911		RIM-ASSY,500S-12TD	ﾘﾑｱｯｾﾝ	2	[TUJW70][TUSW70][TUWW70] [TUGW70] INC.7-10
7	NO PART NO.	#	RIM	ﾘﾑ	2	[TUJW70][TUSW70][TUWW70] [TUGW70]
8	53656-82041		BAND	ﾊﾞﾝﾄﾞ	2	[TUJW70][TUSW70][TUWW70] [TUGW70]
9	53656-82051		FLANGE,SIDE	ﾌﾗﾝｼﾞ	2	[TUJW70][TUSW70][TUWW70] [TUGW70]
10	53656-82061		RING,LOCK	ﾘﾝｸﾞ	2	[TUJW70][TUSW70][TUWW70] [TUGW70]

FIG.114 REAR WHEEL
(F50244F0) リヤーホイール

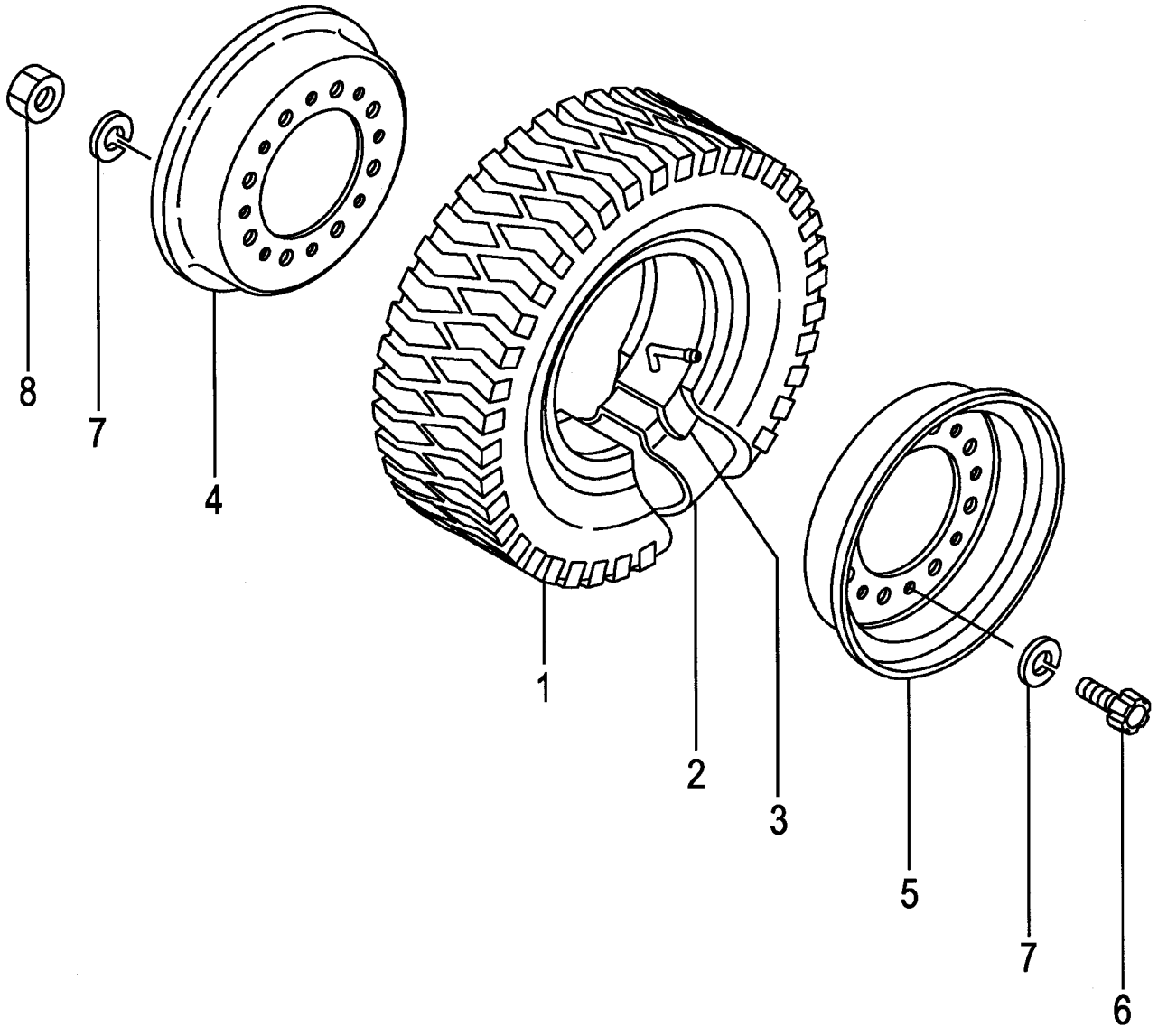

A:FG20C17 FG20T17 FG25C17 FG25T17 C:FD20C17 FD20T17 FD25C17 FD25T17
B:FG20C6 FG20T6 FG25C6 FG25T6 FG20W6 FG25W6 D:FD20C6 FD20T6 FD25C6 FD25T6 FD20W6 FD25W6

Item No	Part No.	Mark	Description		Req'd	Remarks : Serial No.
A1	53656-81501		WHEEL-ASSY,REAR	ﾘｱﾎｲｰﾙｱｯｾﾝ	2	INC.1-8
1	06006-60009		TIRE,600-9-10	ﾀｲﾔ	2	
2	06712-60009		TUBE,600-9-10T	ﾁｭｰﾌﾞ	2	
3	06702-60009		FLAP,600-9-10F	ﾌﾗｯﾌﾟ	2	
A2	23654-40501		RIM-ASSY,400E-9	ﾘﾑｱｯｾﾝ	2	INC.4-8
4	NO PART NO.	#	RIM,INSIDE	ﾘﾑ	2	
5	NO PART NO.	#	RIM,OUTSIDE	ﾘﾑ	2	
6	534F3-82001		BOLT	ﾎﾞﾙﾄ	16	
7	02011-00012		WASHER	ﾜｯｼｬ	32	
8	01400-00012		NUT	ﾅｯﾄ	16	

FIG.115 REAR WHEEL [DR R]

(F50244G0) リヤーホイール

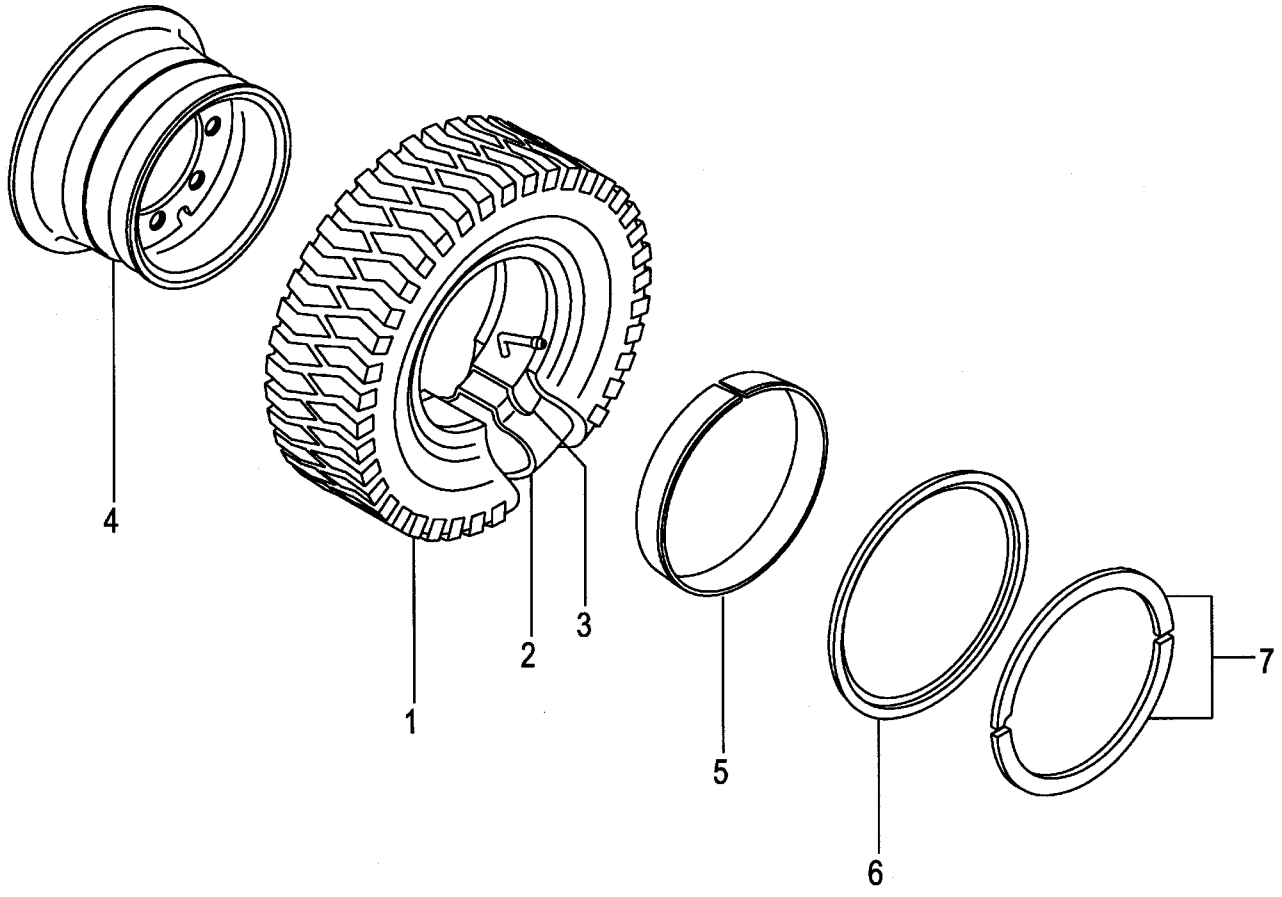

A:FG20C17 FG20T17 FG25C17 FG25T17 C:FD20C17 FD20T17 FD25C17 FD25T17
B:FG20C6 FG20T6 FG25C6 FG25T6 FG20W6 FG25W6 D:FD20C6 FD20T6 FD25C6 FD25T6 FD20W6 FD25W6

Item No	Part No.	Mark	Description		Req'd	Remarks : Serial No.
A1	53666-81501		WHEEL-ASSY,REAR	ﾘｱﾎｲｰﾙｱｯｾﾝ	2	[DR R] INC.1-7
1	06006-60009		TIRE,600-9-10	ﾀｲﾔ	2	[DR R]
2	06712-60009		TUBE,600-9-10T	ﾁｭｰﾌﾞ	2	[DR R]
3	06702-60009		FLAP,600-9-10F	ﾌﾗｯﾌﾟ	2	[DR R]
A2	53666-81901		RIM-ASSY,400E-9	ﾘﾑｱｯｾﾝ	2	[DR R] INC.4-7
4	NO PART NO.	#	RIM	ﾘﾑ	2	[DR R]
5	53666-82021		BAND	ﾊﾞﾝﾄﾞ	2	[DR R]
6	53666-82031		FLANGE,SIDE	ﾌﾗﾝｼﾞ	2	[DR R]
7	53666-82041		RING,LOCK	ﾘﾝｸﾞ	2	[DR R]

FIG.116 REAR WHEEL [TJ R][TJSR][T R][TS R]

(F50244H0) リヤーホイール

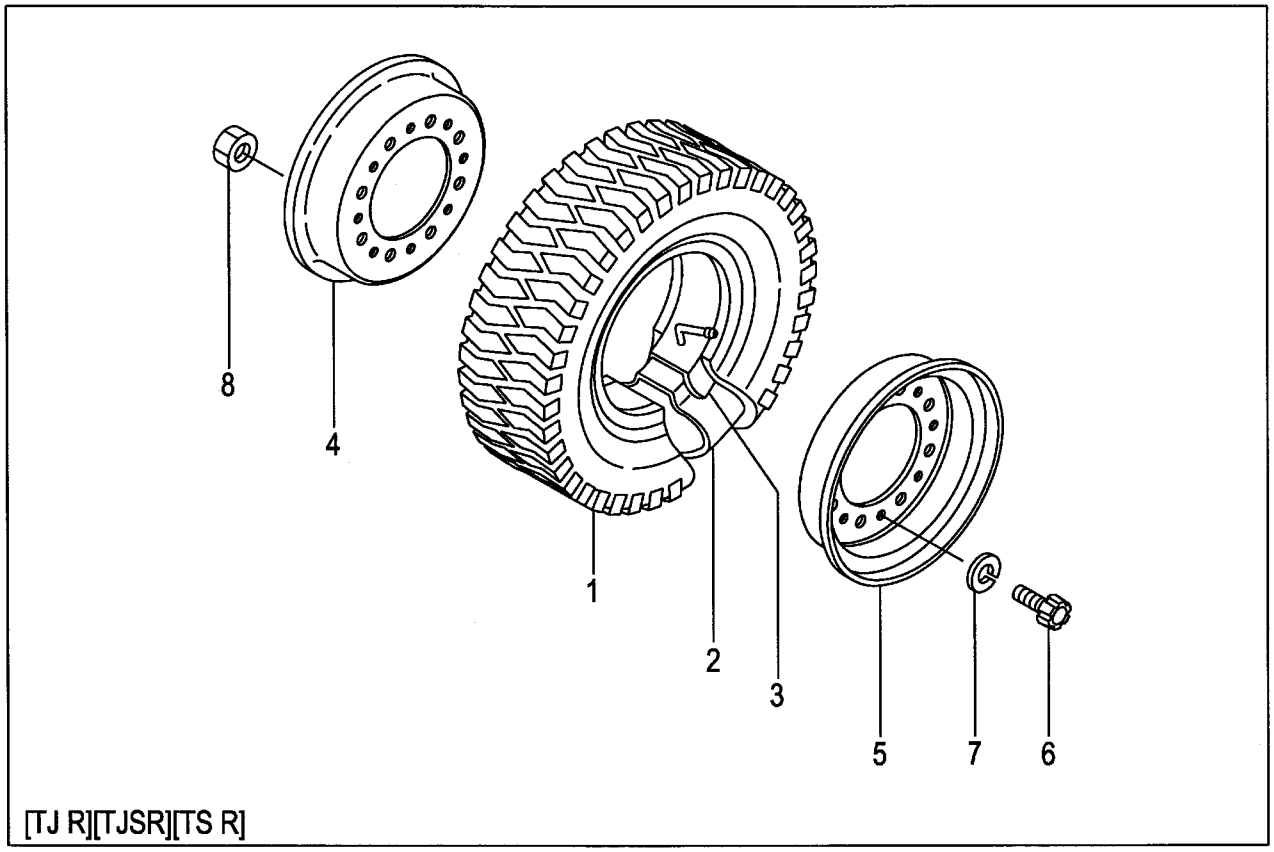

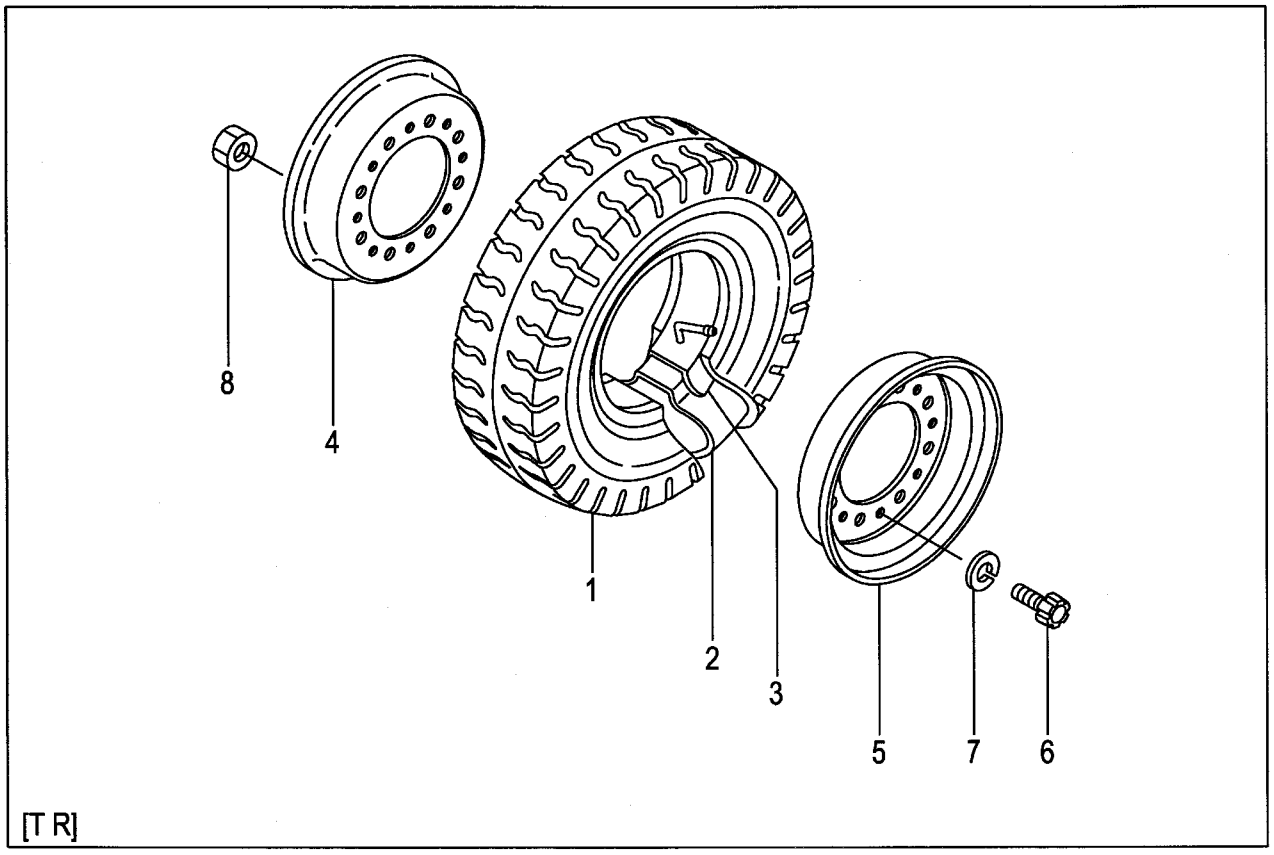

A:FG20C17 FG20T17 FG25C17 FG25T17 C:FD20C17 FD20T17 FD25C17 FD25T17 (F50244H0)
B:FG20C6 FG20T6 FG25C6 FG25T6 FG20W6 FG25W6 D:FD20C6 FD20T6 FD25C6 FD25T6 FD20W6 FD25W6

Item No	Part No.	Mark	Description		Req'd	Remarks : Serial No.
A1	53656-81501		WHEEL-ASSY,REAR	ﾘｱﾎｲｰﾙｱｯｾﾝ	2	[TJ R] INC.1-8
-	53656-81401		WHEEL-ASSY,REAR	ﾘｱﾎｲｰﾙｱｯｾﾝ	2	[TJSR] INC.1-8
-	23654-40511		WHEEL-ASSY,REAR	ﾘｱﾎｲｰﾙｱｯｾﾝ	2	[T R] INC.1-8
-	53656-81601		WHEEL-ASSY,REAR	ﾘｱﾎｲｰﾙｱｯｾﾝ	2	[TS R] INC.1-8
1	06006-60009		TIRE,600-9-10	ﾀｲﾔ	2	[TJ R]
-	06005-60009		TIRE,600-9-10	ﾀｲﾔ	2	[TJSR]
-	06001-60009		TIRE,600-9-10	ﾀｲﾔ	2	[T R]
-	06007-60009		TIRE,600-9-10	ﾀｲﾔ	2	[TS R]
2	06712-60009		TUBE,600-9-10T	ﾁｭｰﾌﾞ	2	[TJ R][TJSR][T R][TS R]
3	06702-60009		FLAP,600-9-10F	ﾌﾗｯﾌﾟ	2	[TJ R][TJSR][T R][TS R]
A2	23654-40501		RIM-ASSY,400E-9	ﾘﾑｱｯｾﾝ	2	[TJ R][TJSR][T R][TS R] INC.4-8
4	NO PART NO.	#	RIM,INSIDE	ﾘﾑ	2	[TJ R][TJSR][T R][TS R]
5	NO PART NO.	#	RIM,OUTSIDE	ﾘﾑ	2	[TJ R][TJSR][T R][TS R]
6	534F3-82001		BOLT	ﾎﾞﾙﾄ	16	[TJ R][TJSR][T R][TS R]
7	02011-00012		WASHER	ﾜｯｼｬ	32	[TJ R][TJSR][T R][TS R]
8	01400-00012		NUT	ﾅｯﾄ	16	[TJ R][TJSR][T R][TS R]

FIG.117 REAR WHEEL [(TJ R,TJSR,T R,TS R)/DR R]

(F50244J0) リヤーホイール

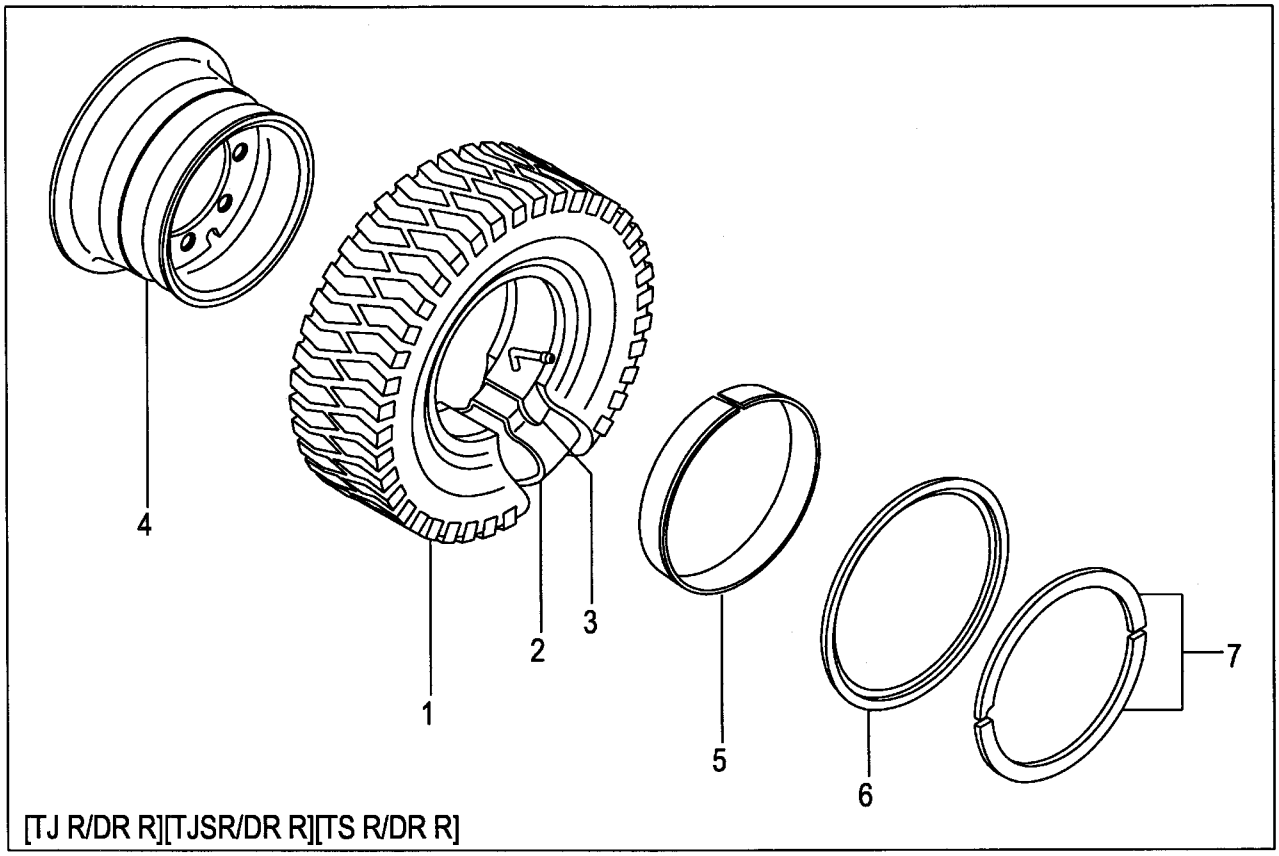

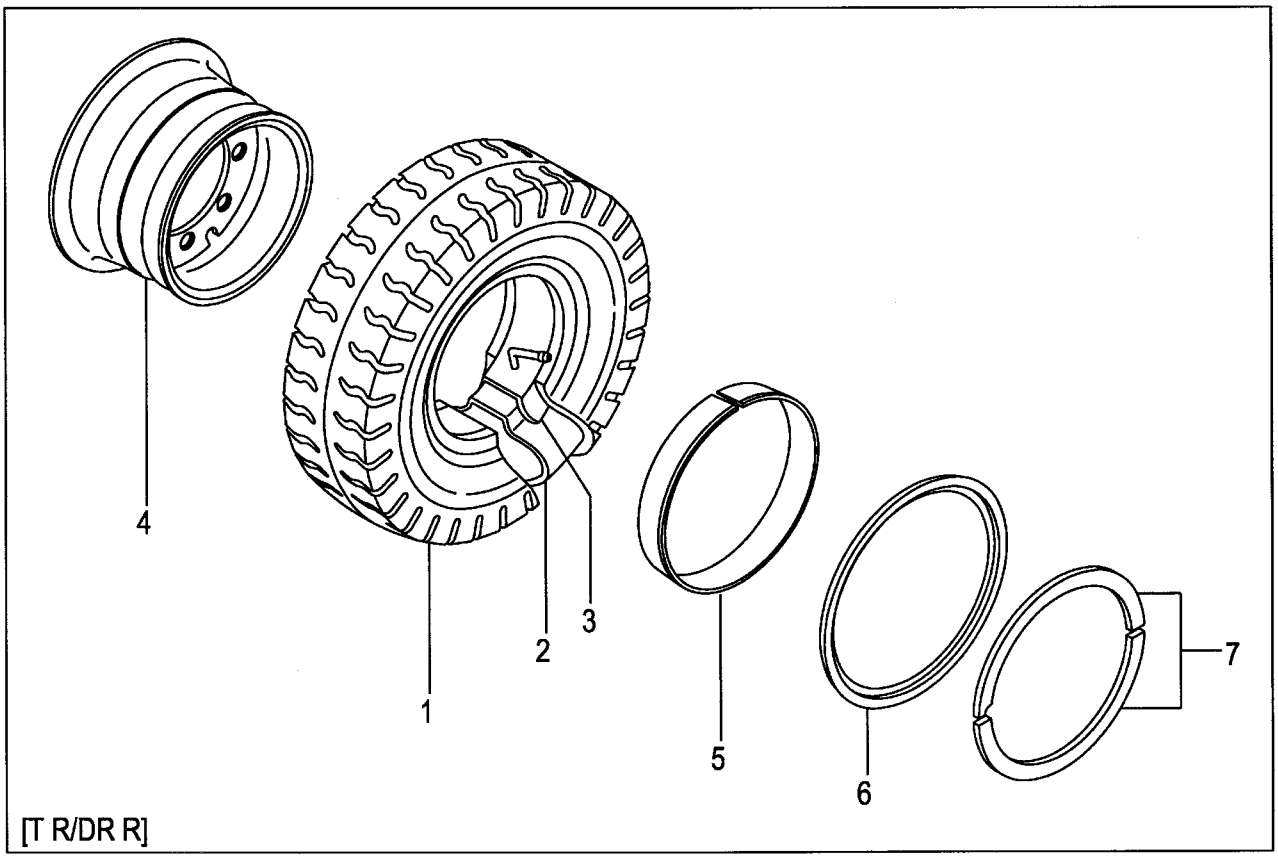

A:FG20C17 FG20T17 FG25C17 FG25T17 C:FD20C17 FD20T17 FD25C17 FD25T17
B:FG20C6 FG20T6 FG25C6 FG25T6 FG20W6 FG25W6 D:FD20C6 FD20T6 FD25C6 FD25T6 FD20W6 FD25W6

Item No	Part No.	Mark	Description		Req'd	Remarks : Serial No.
A1	53666-81501		WHEEL-ASSY,REAR	ﾘｱﾎｲｰﾙｱｯｾﾝ	2	[TJ R/DR R] INC.1-7
-	53666-81401		WHEEL-ASSY,REAR	ﾘｱﾎｲｰﾙｱｯｾﾝ	2	[TJSR/DR R] INC.1-7
-	53666-80901		WHEEL-ASSY,REAR	ﾘｱﾎｲｰﾙｱｯｾﾝ	2	[T R/DR R] INC.1-7
-	53666-81601		WHEEL-ASSY,REAR	ﾘｱﾎｲｰﾙｱｯｾﾝ	2	[TS R/DR R] INC.1-7
1	06006-60009		TIRE,600-9-10	ﾀｲﾔ	2	[TJ R/DR R]
-	06005-60009		TIRE,600-9-10	ﾀｲﾔ	2	[TJSR/DR R]
-	06001-60009		TIRE,600-9-10	ﾀｲﾔ	2	[T R/DR R]
-	06007-60009		TIRE,600-9-10	ﾀｲﾔ	2	[TS R/DR R]
2	06712-60009		TUBE,600-9-10T	ﾁｭｰﾌﾞ	2	[TJ R/DR R][TJSR/DR R]
						[T R/DR R][TS R/DR R]
3	06702-60009		FLAP,600-9-10F	ﾌﾗｯﾌﾟ	2	[TJ R/DR R][TJSR/DR R]
						[T R/DR R][TS R/DR R]
A2	53666-81901		RIM-ASSY,400E-9	ﾘﾑｱｯｾﾝ	2	[TJ R/DR R][TJSR/DR R] INC.4-7
-	53666-81901		RIM-ASSY,400E-9	ﾘﾑｱｯｾﾝ	2	[T R/DR R][TS R/DR R] INC.4-7
4	NO PART NO.	#	RIM	ﾘﾑ	2	[TJ R/DR R][TJSR/DR R]
						[T R/DR R][TS R/DR R]
5	53666-82021		BAND	ﾊﾞﾝﾄﾞ	2	[TJ R/DR R][TJSR/DR R]
						[T R/DR R][TS R/DR R]
6	53666-82031		FLANGE,SIDE	ﾌﾗﾝｼﾞ	2	[TJ R/DR R][TJSR/DR R]
						[T R/DR R][TS R/DR R]
7	53666-82041		RING,LOCK	ﾘﾝｸﾞ	2	[TJ R/DR R][TJSR/DR R]
						[T R/DR R][TS R/DR R]

FIG.118 REAR WHEEL [TUJR][TUSR][TUWR][TUGR]

(F50244K0) リヤーホイール

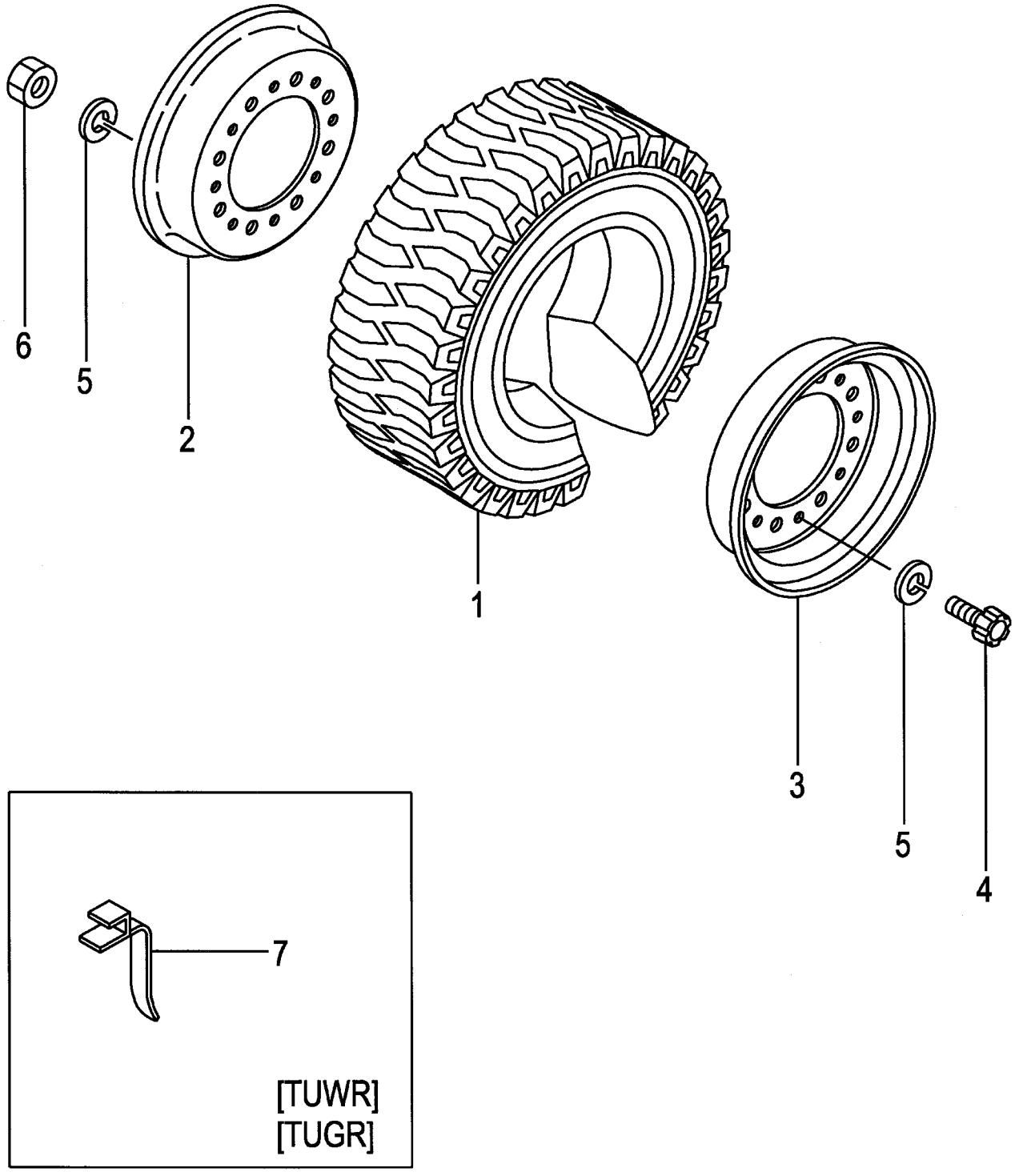

A:FG20C17 FG20T17 FG25C17 FG25T17 D:FD20C17 FD20T17 FD25C17 FD25T17
B:FG20C6 FG20T6 FG25C6 FG25T6 E:FD20C6 FD20T6 FD25C6 FD25T6
C:FG20W6 FG25W6 F:FD20W6 FD25W6

FIG.118
(F50244K0)

Item No	Part No.	Mark	Description		Req'd	Remarks : Serial No.
A1	539A6-80301		WHEEL-ASSY,REAR	ﾘｱﾎｲｰﾙｱｯｾﾝ	2	[TSUR] INC.1-6
-	53656-81301		WHEEL-ASSY,REAR	ﾘｱﾎｲｰﾙｱｯｾﾝ	2	[TUJR] INC.1-6
-	53656-81301		WHEEL-ASSY,REAR	ﾘｱﾎｲｰﾙｱｯｾﾝ	2	[TUJR] INC.1-6
-	522A3-80451		WHEEL-ASSY,REAR	ﾘｱﾎｲｰﾙｱｯｾﾝ	2	[TUJR] INC.1-6
-	522A3-80451		WHEEL-ASSY,REAR	ﾘｱﾎｲｰﾙｱｯｾﾝ	2	B,E [TUJR/EX] INC.1-6
-	522A6-80521		WHEEL-ASSY,REAR	ﾘｱﾎｲｰﾙｱｯｾﾝ	2	[TUSR] INC.1-6
-	522A6-80501		WHEEL-ASSY,REAR	ﾘｱﾎｲｰﾙｱｯｾﾝ	2	[TUWR] INC.1-6
-	522A6-80511		WHEEL-ASSY,REAR	ﾘｱﾎｲｰﾙｱｯｾﾝ	2	[TUGR] INC.1-6
1	06807-60009		TIRE,SNOW,600-9	ﾀｲﾔ	2	[TSUR]
-	06806-60009		TIRE,UNIQUE,600-9	ﾀｲﾔ	2	[TUJR]
-	06806-60009		TIRE,UNIQUE,600-9	ﾀｲﾔ	2	[TUJR]
-	06807-60009		TIRE,UNIQUE,600-9	ﾀｲﾔ	2	[TUJR]
-	06807-60009		TIRE,UNIQUE,600-9	ﾀｲﾔ	2	B,E [TUJR/EX]
-	06851-60009		TIRE,SOFTONE,600-9	ﾀｲﾔ	2	[TUSR]
-	06841-60009		TIRE,WHITE,600-9	ﾀｲﾔ	2	[TUWR]
-	06843-60009		TIRE,GREEN,600-9	ﾀｲﾔ	2	[TUGR]
A2	23654-40501		RIM-ASSY,400E-9	ﾘﾑｱｯｾﾝ	2	[TSUR][TUJR][TUSR][TUWR] [TUGR] INC.2-6
2	NO PART NO.	#	RIM,INSIDE	ﾘﾑ	2	[TSUR][TUJR][TUSR][TUWR] [TUGR]
3	NO PART NO.	#	RIM,OUTSIDE	ﾘﾑ	2	[TSUR][TUJR][TUSR][TUWR] [TUGR]
4	534F3-82001		BOLT	ﾎﾞﾙﾄ	16	[TSUR][TUJR][TUSR][TUWR] [TUGR]
5	02011-00012		WASHER	ﾜｯｼｬ	32	[TSUR][TUJR][TUSR][TUWR] [TUGR]
6	01400-00012		NUT	ﾅｯﾄ	16	[TSUR][TUJR][TUSR][TUWR] [TUGR]
7	571A6-82081		BELT,EARTH	ﾍﾞﾙﾄ	1	[TUWR][TUGR]

FIG.119 REAR WHEEL [TUJR/DR R]

(F50244L0) リヤーホイール

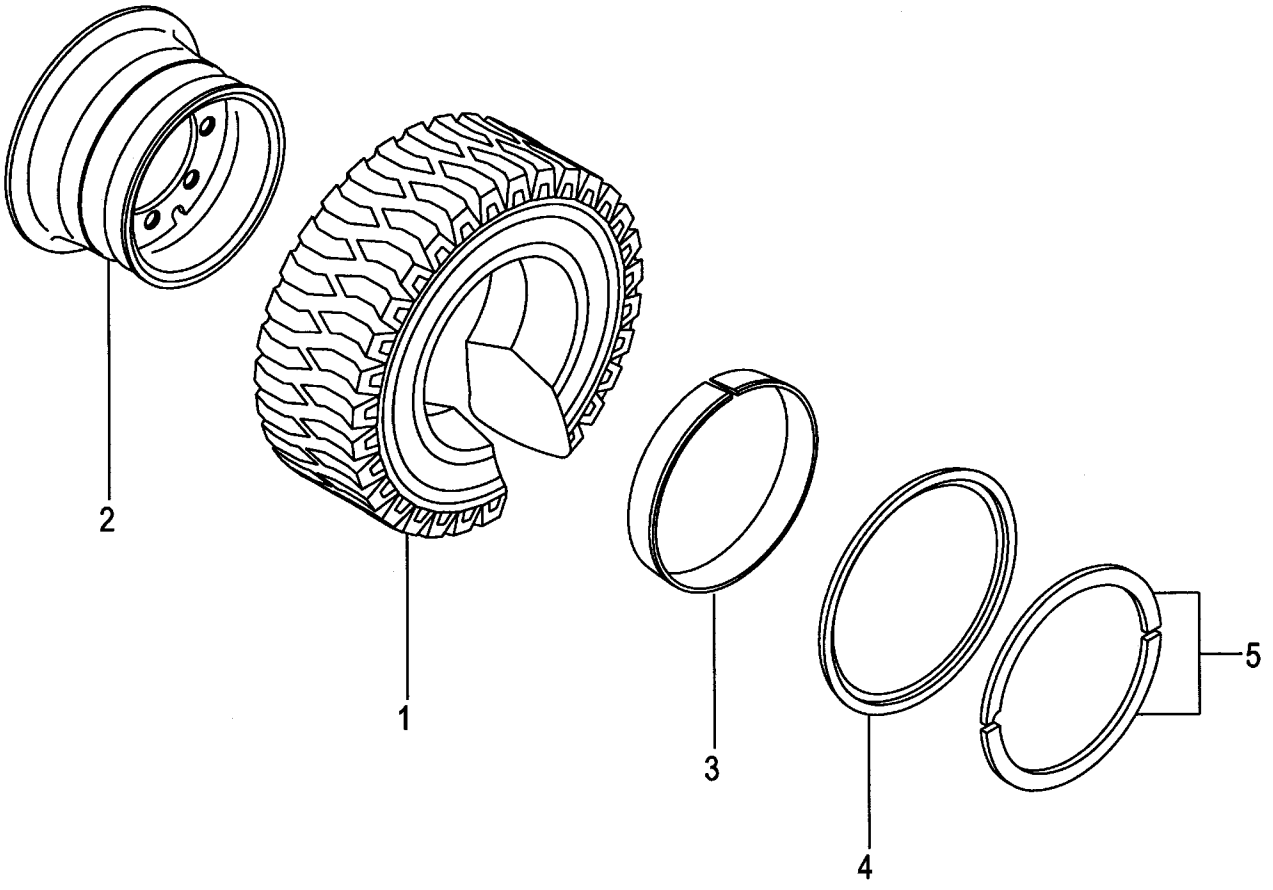

FIG.119

(F50244L0)

A:FG20C17 FG20T17 FG25C17 FG25T17 C:FD20C17 FD20T17 FD25C17 FD25T17
B:FG20C6 FG20T6 FG25C6 FG25T6 FG20W6 FG25W6 D:FD20C6 FD20T6 FD25C6 FD25T6 FD20W6 FD25W6

Item No	Part No.	Mark	Description		Req'd	Remarks : Serial No.
A1	53666-81301		WHEEL-ASSY,REAR	ﾘｱﾎｲｰﾙｱｯｾﾝ	2	[TUJR/DR R] INC.1-5
1	06806-60009		TIRE,UNIQUE,600-9	ﾀｲﾔ	2	[TUJR/DR R]
A2	53666-81901		RIM-ASSY,400E-9	ﾘﾑｱｯｾﾝ	2	[TUJR/DR R] INC.2-5
2	NO PART NO.	#	RIM	ﾘﾑ	2	[TUJR/DR R]
3	53666-82021		BAND	ﾊﾞﾝﾄﾞ	2	[TUJR/DR R]
4	53666-82031		FLANGE,SIDE	ﾌﾗﾝｼﾞ	2	[TUJR/DR R]
5	53666-82041		RING,LOCK	ﾘﾝｸﾞ	2	[TUJR/DR R]

FIG.120 REAR WHEEL [TRAR]

(F50244M0) リヤーホイール

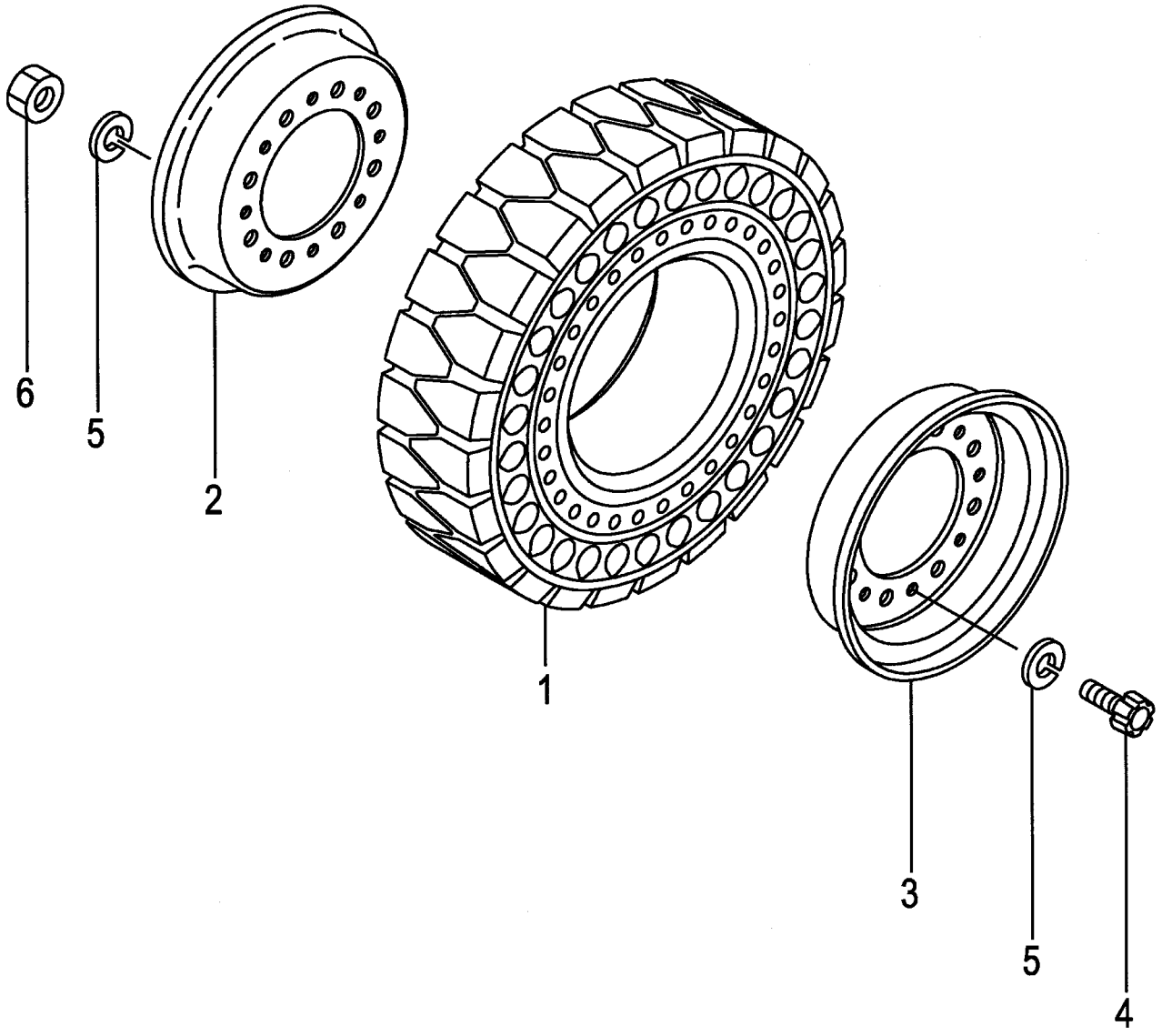

A:FG20C17 FG20T17 FG25C17 FG25T17 C:FD20C17 FD20T17 FD25C17 FD25T17
B:FG20C6 FG20T6 FG25C6 FG25T6 FG20W6 FG25W6 D:FD20C6 FD20T6 FD25C6 FD25T6 FD20W6 FD25W6

Item No	Part No.	Mark	Description		Req'd	Remarks : Serial No.
A1	534A6-80271		WHEEL-ASSY,REAR	ﾘｱﾎｲｰﾙｱｯｾﾝ	2	[TRAR] INC.1-6
1	534A6-85001		TIRE,AIR-BOSS,600-9	ﾀｲﾔ	2	[TRAR]
A2	23654-40501		RIM-ASSY,400E-9	ﾘﾑｱｯｾﾝ	2	[TRAR] INC.2-6
2	NO PART NO.	#	RIM,INSIDE	ﾘﾑ	2	[TRAR]
3	NO PART NO.	#	RIM,OUTSIDE	ﾘﾑ	2	[TRAR]
4	534F3-82001		BOLT	ﾎﾞﾙﾄ	16	[TRAR]
5	02011-00012		WASHER	ﾜｯｼｬ	32	[TRAR]
6	01400-00012		NUT	ﾅｯﾄ	16	[TRAR]

FIG.121 POWER CYLINDER

(F5024510) ﾊﾟﾜｰｼﾘﾝﾀﾞ

KIT
K1 901

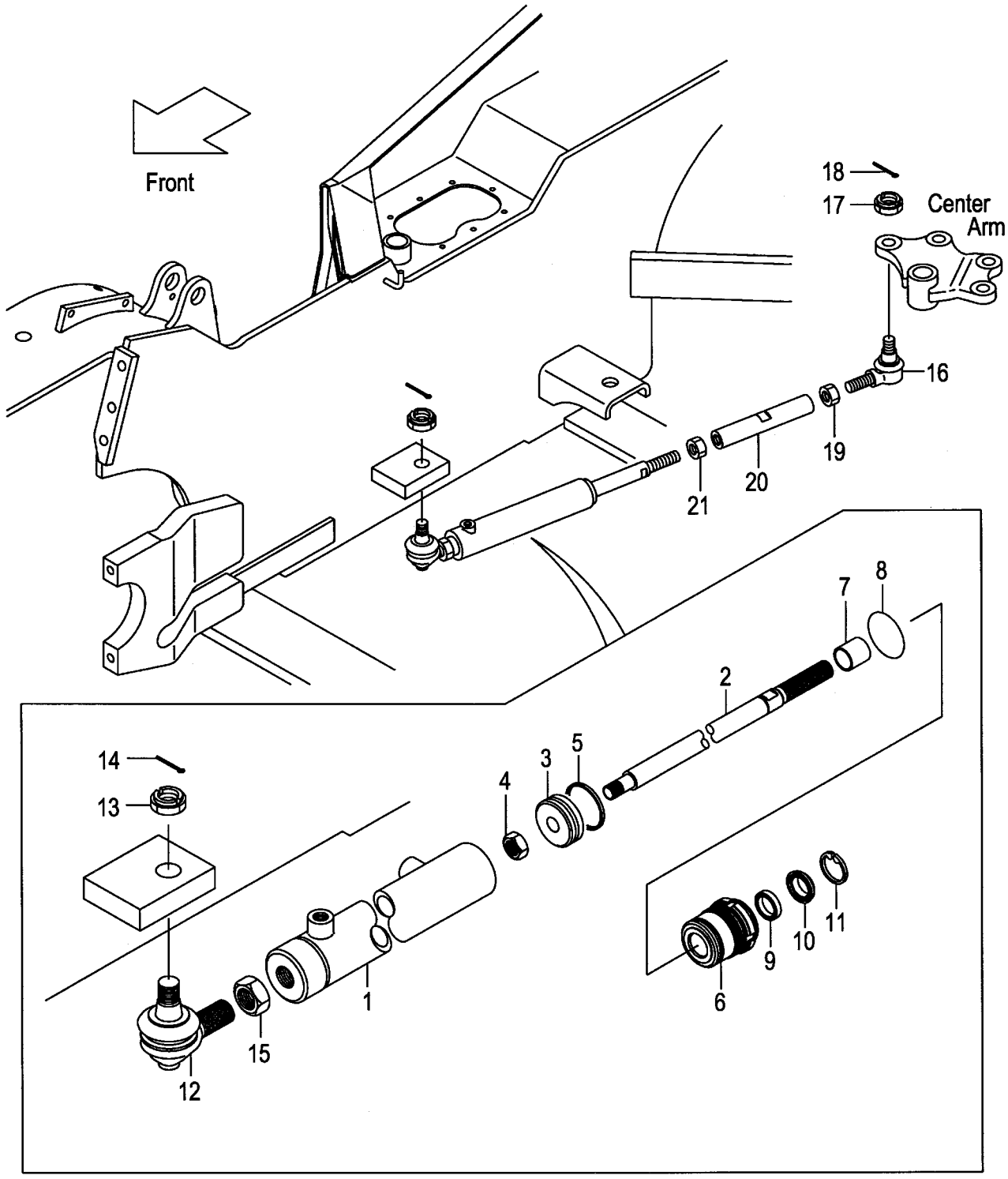

A:FG20C17 FG20T17 FG25C17 FG25T17 C:FD20C17 FD20T17 FD25C17 FD25T17
B:FG20C6 FG20T6 FG25C6 FG25T6 FG20W6 FG25W6 D:FD20C6 FD20T6 FD25C6 FD25T6 FD20W6 FD25W6

Item No	Part No.	Mark	Description		Req'd	Remarks : Serial No.
A1	239A4-50201		CYL-ASSY,PS	ﾊﾟﾜｽﾃｼﾘﾝﾀﾞｱｯｾﾝ	1	A:1-11027 B:1-65592 C:1-11011 D:1-84216 INC.1-15
-	238G4-50201		CYL-ASSY,PS	ﾊﾟﾜｽﾃｼﾘﾝﾀﾞｱｯｾﾝ	1	A:11028- B:65593- C:11012- D:84217- INC.1-15
901	214A4-59802	K1	KIT,REPAIR	ﾘﾍﾟｱｷｯﾄ	1	INC.5,8-11
1	214A4-50111		TUBE,CYL	ﾁｭｰﾌﾞ	1	A:1-11027 B:1-65592 C:1-11011 D:1-84216
-	238G4-50211		TUBE,CYL	ﾁｭｰﾌﾞ	1	A:11028- B:65593- C:11012- D:84217-
2	214A4-52041		ROD,PISTON	ﾛｯﾄﾞ	1	
3	214A4-52031		PISTON	ﾋﾟｽﾄﾝ	1	
4	01402-10018		NUT	ﾅｯﾄ	1	
5	25594-52362	*	SEAL,SLIPPER	ｼｰﾙ	1	
6	214A4-52021		CAP,CYL	ｷｬｯﾌﾟ	1	
7	25954-52061		BUSHING	ﾌﾞｯｼﾝｸﾞ	1	
8	03350-00450	*	O-RING	Oﾘﾝｸﾞ	1	
9	25954-52071	*	PACKING	ﾊﾟｯｷﾝｸﾞ	1	
10	25954-52081	*	SEAL,DUST	ｼｰﾙ	1	
11	25954-52091	*	RING,SNAP	ｽﾅｯﾌﾟﾘﾝｸﾞ	1	
A2	224W4-30341		END-ASSY,ROD,RH	ｴﾝﾄﾞｱｯｾﾝ	1	A:1-11027 B:1-65592 C:1-11011 D:1-84216 INC.12-14
-	24234-30551		END-ASSY,ROD,RH	ｴﾝﾄﾞｱｯｾﾝ	1	A:11028- B:65593- C:11012- D:84217- INC.12-14
12	NO PART NO.	#	END,ROD,RH	ｴﾝﾄﾞ	1	A:1-11027 B:1-65592 C:1-11011 D:1-84216
-	NO PART NO.	#	END,ROD,RH	ｴﾝﾄﾞ	1	A:11028- B:65593- C:11012- D:84217-

FIG.121 POWER CYLINDER

(F5024510) ﾊﾟﾜｰｼﾘﾝﾀﾞ

KIT
K1 901

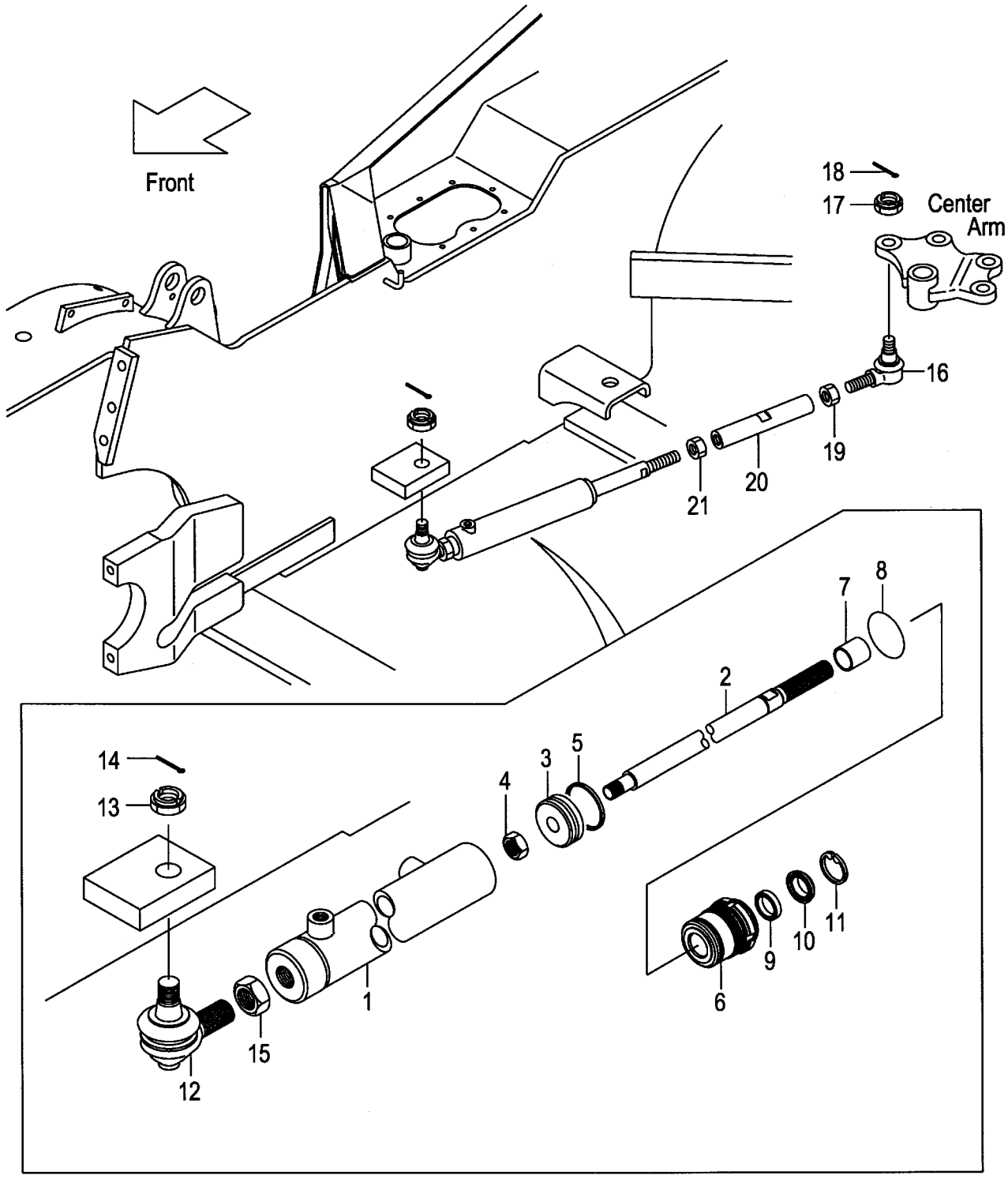

A:FG20C17 FG20T17 FG25C17 FG25T17 C:FD20C17 FD20T17 FD25C17 FD25T17
B:FG20C6 FG20T6 FG25C6 FG25T6 FG20W6 FG25W6 D:FD20C6 FD20T6 FD25C6 FD25T6 FD20W6 FD25W6

Item No	Part No.	Mark	Description		Req'd	Remarks : Serial No.
13	01412-10020		NUT,CASTLE	ﾅｯﾄ	1	A:1-11027 B:1-65592 C:1-11011 D:1-84216
-	01412-10016		NUT,CASTLE	ﾅｯﾄ	1	A:11028- B:65593- C:11012- D:84217-
14	02200-04040		PIN,COTTER	ﾋﾟﾝ	1	A:1-11027 B:1-65592 C:1-11011 D:1-84216
-	02200-32032		PIN,COTTER	ﾋﾟﾝ	1	A:11028- B:65593- C:11012- D:84217-
15	01402-00024		NUT	ﾅｯﾄ	1	A:1-11027 B:1-65592 C:1-11011 D:1-84216
-	01402-00022		NUT	ﾅｯﾄ	1	A:11028- B:65593- C:11012- D:84217-
A3	24234-30561		END-ASSY,ROD,LH	ｴﾝﾄﾞｱｯｾﾝ	1	INC.16-18
16	NO PART NO.	#	END,ROD,LH	ｴﾝﾄﾞ	1	
17	01412-10016		NUT,CASTLE	ﾅｯﾄ	1	
18	02200-32032		PIN,COTTER	ﾋﾟﾝ	1	
19	01407-00022		NUT,LH	ﾅｯﾄ	1	
20	214A4-52051		ROD,CONNECTING	ﾛｯﾄﾞ	1	A:1-11027 B:1-65592 C:1-11011 D:1-84216
-	238G4-52201		ROD,CONNECTING	ﾛｯﾄﾞ	1	A:11028- B:65593- C:11012- D:84217-
21	01402-00024		NUT	ﾅｯﾄ	1	

FIG.122 POWER CYLINDER [EXC][EXE][EXK][EXN][OBT]

(F5024520) ﾊﾟﾜｰｼﾘﾝﾀﾞ

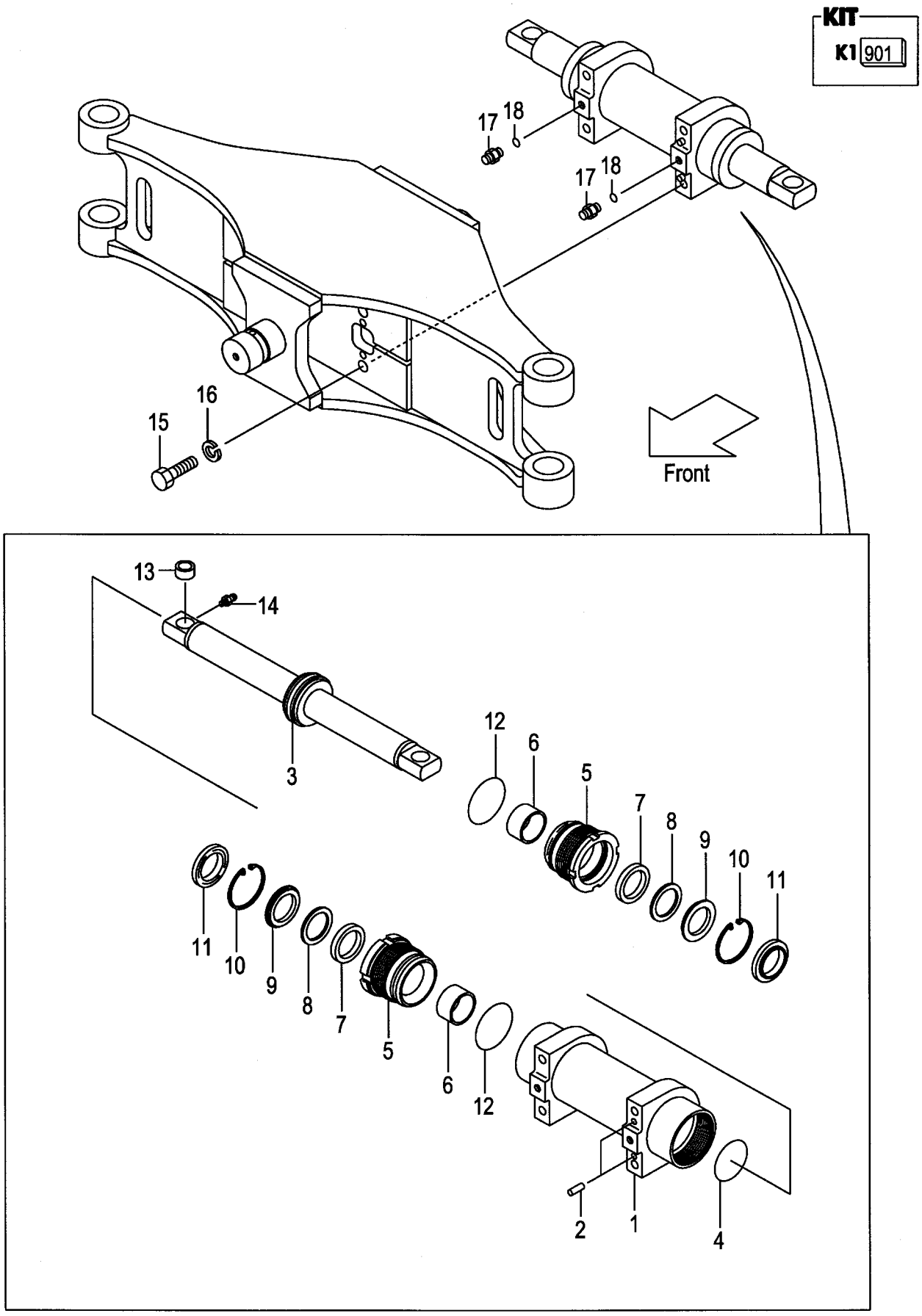

A:FG20C6 FG20T6 FG25C6 FG25T6
B:FD20C6 FD20T6 FD25C6 FD25T6

Item No	Part No.	Mark	Description		Req'd	Remarks : Serial No.
A1	533A2-40201		CYL-ASSY,PS	ﾊﾟﾜｽﾃｼﾘﾝﾀﾞｱｯｾﾝ	1	[EXC][EXE][EXK][EXN][OBT] [EXB/OBT] INC.1-14
901	514A2-49803	K1	KIT,REPAIR	ﾘﾍﾟｱｷｯﾄ	1	[EXC][EXE][EXK][EXN][OBT] [EXB/OBT] INC.4,7,8,10-12
1	514A2-40462		TUBE,CYL	ﾁｭｰﾌﾞ	1	[EXC][EXE][EXK][EXN][OBT] [EXB/OBT]
2	02212-10020		PIN,PARALLEL	ﾋﾟﾝ	2	[EXC][EXE][EXK][EXN][OBT] [EXB/OBT]
A2	533A2-40211		ROD-ASSY,PISTON	ﾋﾟｽﾄﾝﾛｯﾄﾞｱｯｾﾝ	1	[EXC][EXE][EXK][EXN][OBT] [EXB/OBT] INC.3,4
3	533A2-42001		ROD,PISTON	ﾛｯﾄﾞ	1	[EXC][EXE][EXK][EXN][OBT] [EXB/OBT]
4	25784-52342	*	SEAL	ｼｰﾙ	1	[EXC][EXE][EXK][EXN][OBT] [EXB/OBT]
5	215B4-52122		CAP,CYL	ｷｬｯﾌﾟ	2	[EXC][EXE][EXK][EXN][OBT] [EXB/OBT]
6	59595-55301		BUSHING	ﾌﾞｯｼﾝｸﾞ	2	[EXC][EXE][EXK][EXN][OBT] [EXB/OBT]
7	25958-52201	*	PACKING	ﾊﾟｯｷﾝｸﾞ	2	[EXC][EXE][EXK][EXN][OBT] [EXB/OBT]
8	25958-52211	*	RING,BACK-UP	ﾘﾝｸﾞ	2	[EXC][EXE][EXK][EXN][OBT] [EXB/OBT]
9	25958-52221		RETAINER	ﾘﾃｰﾅ	2	[EXC][EXE][EXK][EXN][OBT] [EXB/OBT]
10	02110-00062	*	RING,SNAP	ｽﾅｯﾌﾟﾘﾝｸﾞ	2	[EXC][EXE][EXK][EXN][OBT] [EXB/OBT]
11	24469-42701	*	SEAL,DUST	ｼｰﾙ	2	[EXC][EXE][EXK][EXN][OBT] [EXB/OBT]
12	214A8-52221	*	O-RING	Oﾘﾝｸﾞ	2	[EXC][EXE][EXK][EXN][OBT] [EXB/OBT]
13	533A2-42021		BUSH	ﾌﾞｯｼﾝｸﾞ	2	[EXC][EXE][EXK][EXN][OBT] [EXB/OBT]
14	214A8-52051		NIPPLE,GREASE	ﾆｯﾌﾟﾙ	2	[EXC][EXE][EXK][EXN][OBT] [EXB/OBT]
15	01100-14035		BOLT	ﾎﾞﾙﾄ	4	[EXC][EXE][EXK][EXN][OBT] [EXB/OBT]
16	02010-00014		WASHER	ﾜｯｼｬ	4	[EXC][EXE][EXK][EXN][OBT] [EXB/OBT]
A3	224W7-62701		NIPPLE-ASSY	ﾆｯﾌﾟﾙｱｯｾﾝ	2	[EXC][EXE][EXK][EXN][OBT] [EXB/OBT] INC.17,18
17	NO PART NO.	#	NIPPLE	ﾆｯﾌﾟﾙ	2	[EXC][EXE][EXK][EXN][OBT] [EXB/OBT]
18	03320-00110		O-RING	Oﾘﾝｸﾞ	2	[EXC][EXE][EXK][EXN][OBT] [EXB/OBT]

FIG.123 POWER CYLINDER [(EXC,EXE,EXK,EXN)/PSS]

(F5024530) ﾊﾟﾜｰｼﾘﾝﾀﾞ

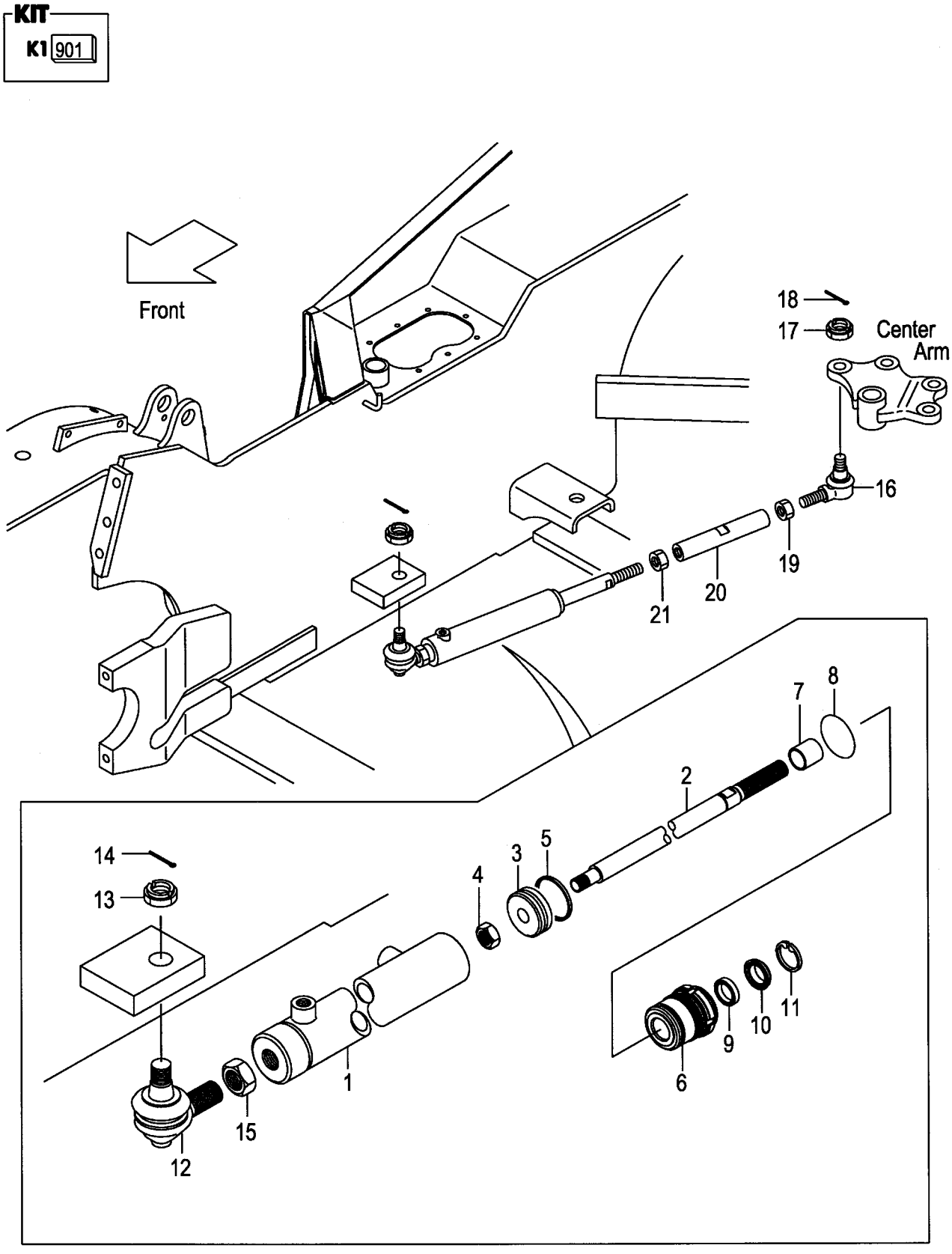

A:FG20C6 FG20T6 FG25C6 FG25T6
B:FD20C6 FD20T6 FD25C6 FD25T6

Item No	Part No.	Mark	Description		Req'd	Remarks : Serial No.
A1	239A4-50201		CYL-ASSY,PS	ﾊﾟﾜｽﾃｼﾘﾝﾀﾞｱｯｾﾝ	1	A:1-65592 B:1-84216 [EXC/PSS][EXE/PSS][EXK/PSS] [EXN/PSS] INC.1-15
-	238G4-50201		CYL-ASSY,PS	ﾊﾟﾜｽﾃｼﾘﾝﾀﾞｱｯｾﾝ	1	A:65593- B:84217- [EXC/PSS][EXE/PSS][EXK/PSS] [EXN/PSS] INC.1-15
901	214A4-59802	K1	KIT,REPAIR	ﾘﾍﾟｱｷｯﾄ	1	[EXC/PSS][EXE/PSS][EXK/PSS] [EXN/PSS] INC.5,8-11
1	214A4-50111		TUBE,CYL	ﾁｭｰﾌﾞ	1	A:1-65592 B:1-84216 [EXC/PSS][EXE/PSS][EXK/PSS] [EXN/PSS]
-	238G4-50211		TUBE,CYL	ﾁｭｰﾌﾞ	1	A:65593- B:84217- [EXC/PSS][EXE/PSS][EXK/PSS] [EXN/PSS]
2	214A4-52041		ROD,PISTON	ﾛｯﾄﾞ	1	[EXC/PSS][EXE/PSS][EXK/PSS] [EXN/PSS]
3	214A4-52031		PISTON	ﾋﾟｽﾄﾝ	1	[EXC/PSS][EXE/PSS][EXK/PSS] [EXN/PSS]
4	01402-10018		NUT	ﾅｯﾄ	1	[EXC/PSS][EXE/PSS][EXK/PSS] [EXN/PSS]
5	25594-52362	*	SEAL,SLIPPER	ｼｰﾙ	1	[EXC/PSS][EXE/PSS][EXK/PSS] [EXN/PSS]
6	214A4-52021		CAP,CYL	ｷｬｯﾌﾟ	1	[EXC/PSS][EXE/PSS][EXK/PSS] [EXN/PSS]
7	25954-52061		BUSHING	ﾌﾞｯｼﾝｸﾞ	1	[EXC/PSS][EXE/PSS][EXK/PSS] [EXN/PSS]
8	03350-00450	*	O-RING	Oﾘﾝｸﾞ	1	[EXC/PSS][EXE/PSS][EXK/PSS] [EXN/PSS]
9	25954-52071	*	PACKING	ﾊﾟｯｷﾝｸﾞ	1	[EXC/PSS][EXE/PSS][EXK/PSS] [EXN/PSS]
10	25954-52081	*	SEAL,DUST	ｼｰﾙ	1	[EXC/PSS][EXE/PSS][EXK/PSS] [EXN/PSS]
11	25954-52091	*	RING,SNAP	ｽﾅｯﾌﾟﾘﾝｸﾞ	1	[EXC/PSS][EXE/PSS][EXK/PSS] [EXN/PSS]
A2	224W4-30341		END-ASSY,ROD,RH	ｴﾝﾄﾞｱｯｾﾝ	1	A:1-65592 B:1-84216 [EXC/PSS][EXE/PSS][EXK/PSS] [EXN/PSS] INC.12-14
-	24234-30551		END-ASSY,ROD,RH	ｴﾝﾄﾞｱｯｾﾝ	1	A:65593- B:84217- [EXC/PSS][EXE/PSS][EXK/PSS] [EXN/PSS] INC.12-14
12	NO PART NO.	#	END,ROD,RH	ｴﾝﾄﾞ	1	A:1-65592 B:1-84216 [EXC/PSS][EXE/PSS][EXK/PSS] [EXN/PSS]

FIG.123 POWER CYLINDER [(EXC,EXE,EXK,EXN)/PSS]

(F5024530) ﾊﾟﾜｰｼﾘﾝﾀﾞ

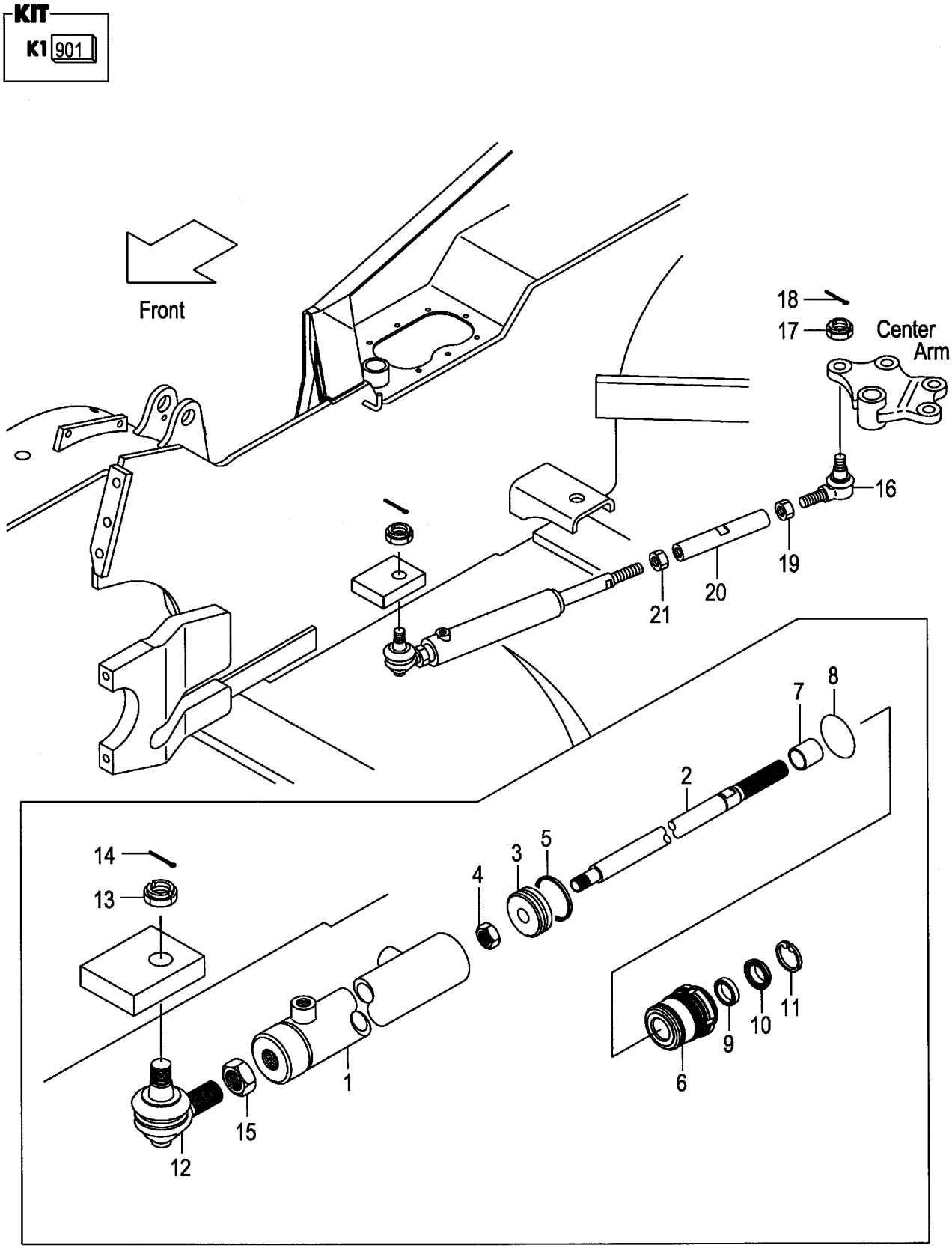

A:FG20C6 FG20T6 FG25C6 FG25T6
B:FD20C6 FD20T6 FD25C6 FD25T6

Item No	Part No.	Mark	Description		Req'd	Remarks : Serial No.
-	NO PART NO.	#	END,ROD,RH	ｴﾝﾄﾞ	1	A B:84217- [EXC/PSS][EXE/PSS][EXK/PSS] [EXN/PSS]
13	01412-10020		NUT,CASTLE	ﾅｯﾄ	1	A:1-65592 B:1-84216 [EXC/PSS][EXE/PSS][EXK/PSS] [EXN/PSS]
-	01412-10016		NUT,CASTLE	ﾅｯﾄ	1	A:65593- B:84217- [EXC/PSS][EXE/PSS][EXK/PSS] [EXN/PSS]
14	02200-04040		PIN,COTTER	ﾋﾟﾝ	1	A:1-65592 B:1-84216 [EXC/PSS][EXE/PSS][EXK/PSS] [EXN/PSS]
-	02200-32032		PIN,COTTER	ﾋﾟﾝ	1	A:65593- B:84217- [EXC/PSS][EXE/PSS][EXK/PSS] [EXN/PSS]
15	01402-00024		NUT	ﾅｯﾄ	1	A:1-65592 B:1-84216 [EXC/PSS][EXE/PSS][EXK/PSS] [EXN/PSS]
-	01402-00022		NUT	ﾅｯﾄ	1	A:65593- B:84217- [EXC/PSS][EXE/PSS][EXK/PSS] [EXN/PSS]
A3	24234-30561		END-ASSY,ROD,LH	ｴﾝﾄﾞｱｯｾﾝ	1	[EXC/PSS][EXE/PSS][EXK/PSS] [EXN/PSS] INC.16-18
16	NO PART NO.	#	END,ROD,LH	ｴﾝﾄﾞ	1	[EXC/PSS][EXE/PSS][EXK/PSS] [EXN/PSS]
17	01412-10016		NUT,CASTLE	ﾅｯﾄ	1	[EXC/PSS][EXE/PSS][EXK/PSS] [EXN/PSS]
18	02200-32032		PIN,COTTER	ﾋﾟﾝ	1	[EXC/PSS][EXE/PSS][EXK/PSS] [EXN/PSS]
19	01407-00022		NUT,LH	ﾅｯﾄ	1	[EXC/PSS][EXE/PSS][EXK/PSS] [EXN/PSS]
20	214A4-52051		ROD,CONNECTING	ﾛｯﾄﾞ	1	A:1-65592 B:1-84216 [EXC/PSS][EXE/PSS][EXK/PSS] [EXN/PSS]
-	238G4-52201		ROD,CONNECTING	ﾛｯﾄﾞ	1	A:65593- B:84217- [EXC/PSS][EXE/PSS][EXK/PSS] [EXN/PSS]
21	01402-00024		NUT	ﾅｯﾄ	1	[EXC/PSS][EXE/PSS][EXK/PSS] [EXN/PSS]

FIG.124 POWER CYLINDER BOOT [PSB][FC][RINFC]

(F5024540) ﾊﾟﾜｰｼﾘﾝﾀﾞﾌﾞｰﾂ

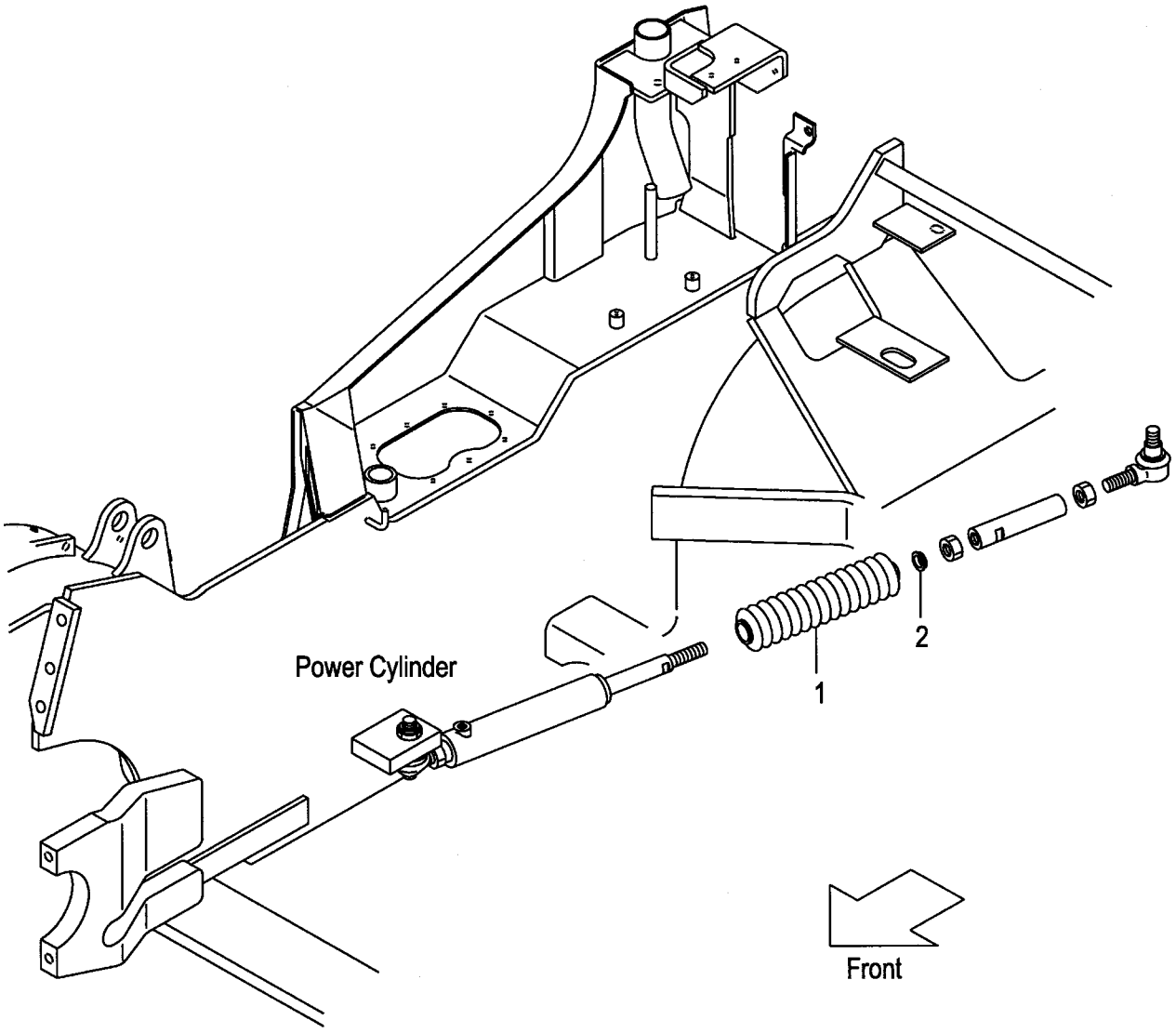

A:FG20C17 FG20T17 FG25C17 FG25T17 C:FD20C17 FD20T17 FD25C17 FD25T17
B:FG20C6 FG20T6 FG25C6 FG25T6 FG20W6 FG25W6 D:FD20C6 FD20T6 FD25C6 FD25T6 FD20W6 FD25W6

Item No	Part No.	Mark	Description	Req'd	Remarks : Serial No.
1	25594-52431		BOOT,POWER-CYL ﾌﾞｰﾂ	1	[PSB][FC][RINFC]
2	23654-52021		HANGER,BOOT ﾊﾝｶﾞ	1	[PSB][FC][RINFC]

FIG.125 OVERHEAD GUARD

(F5025110) オーバ゛ヘッド゛ガ゛ード゛

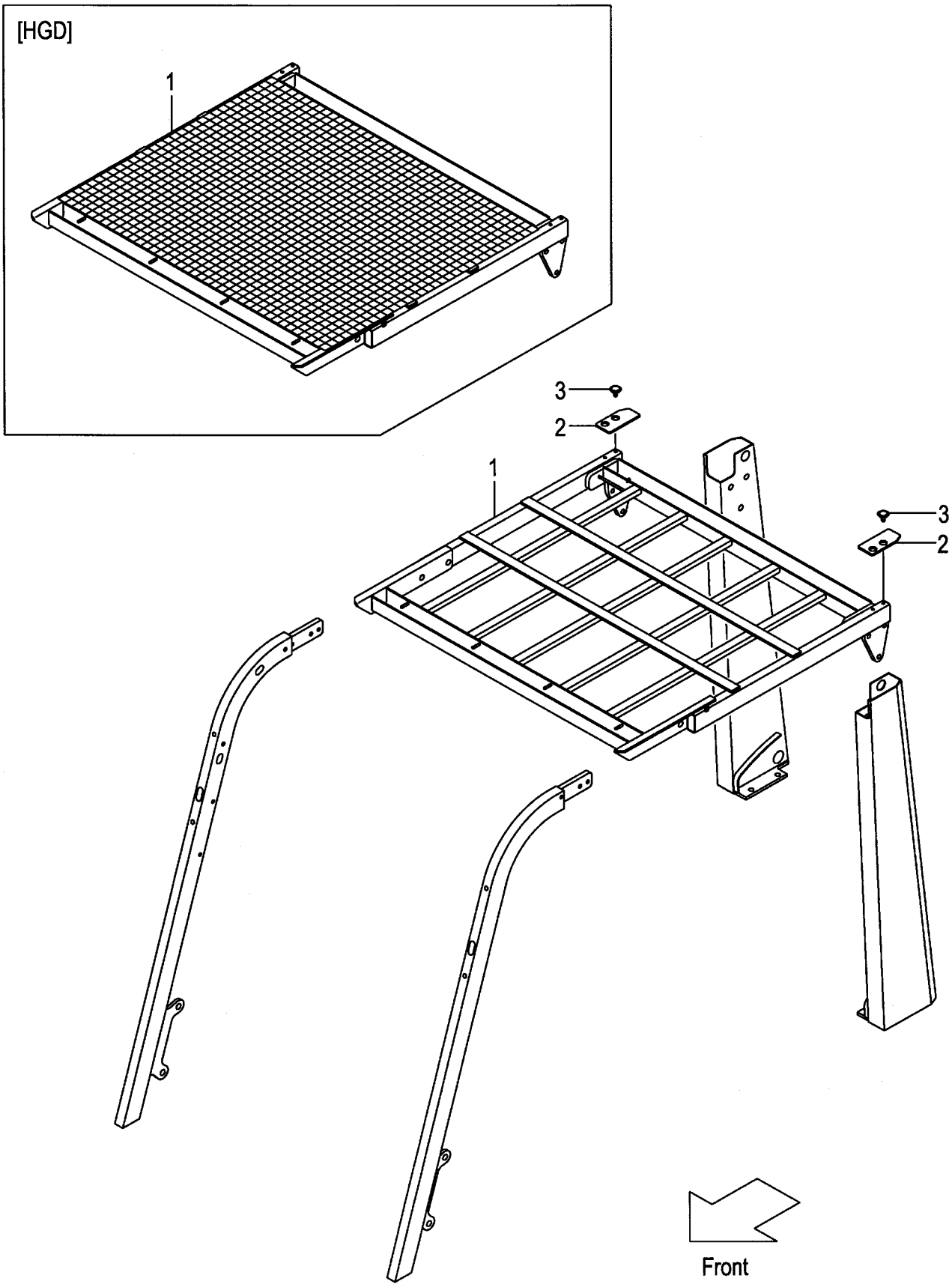

A:FG20C17 FG20T17 FG25C17 FG25T17 C:FD20C17 FD20T17 FD25C17 FD25T17
B:FG20C6 FG20T6 FG25C6 FG25T6 FG20W6 FG25W6 D:FD20C6 FD20T6 FD25C6 FD25T6 FD20W6 FD25W6

Item No	Part No.	Mark	Description		Req'd	Remarks : Serial No.
1	218M5-10401		GUARD,HEAD	ｶﾞｰﾄﾞ	1	
-	539A2-90201		GUARD,HEAD	ｶﾞｰﾄﾞ	1	[HGD]
-	539A5-00401		GUARD,HEAD	ｶﾞｰﾄﾞ	1	B,D [HGH060]
-	539A5-00701		GUARD,HEAD	ｶﾞｰﾄﾞ	1	B,D [HGH100]
-	539A5-00501		GUARD,HEAD	ｶﾞｰﾄﾞ	1	B,D [HGH150]
-	539A5-00601		GUARD,HEAD	ｶﾞｰﾄﾞ	1	B,D [HGH200]
2	218M5-12501		COVER	ｶﾊﾞｰ	2	
3	216G6-42541		CLIP	ｸﾘｯﾌﾟ	4	

FIG.126 OVERHEAD GUARD [EXB][EXC][EXE][EXK][EXN]

(F5025180) オーバヘッドガード

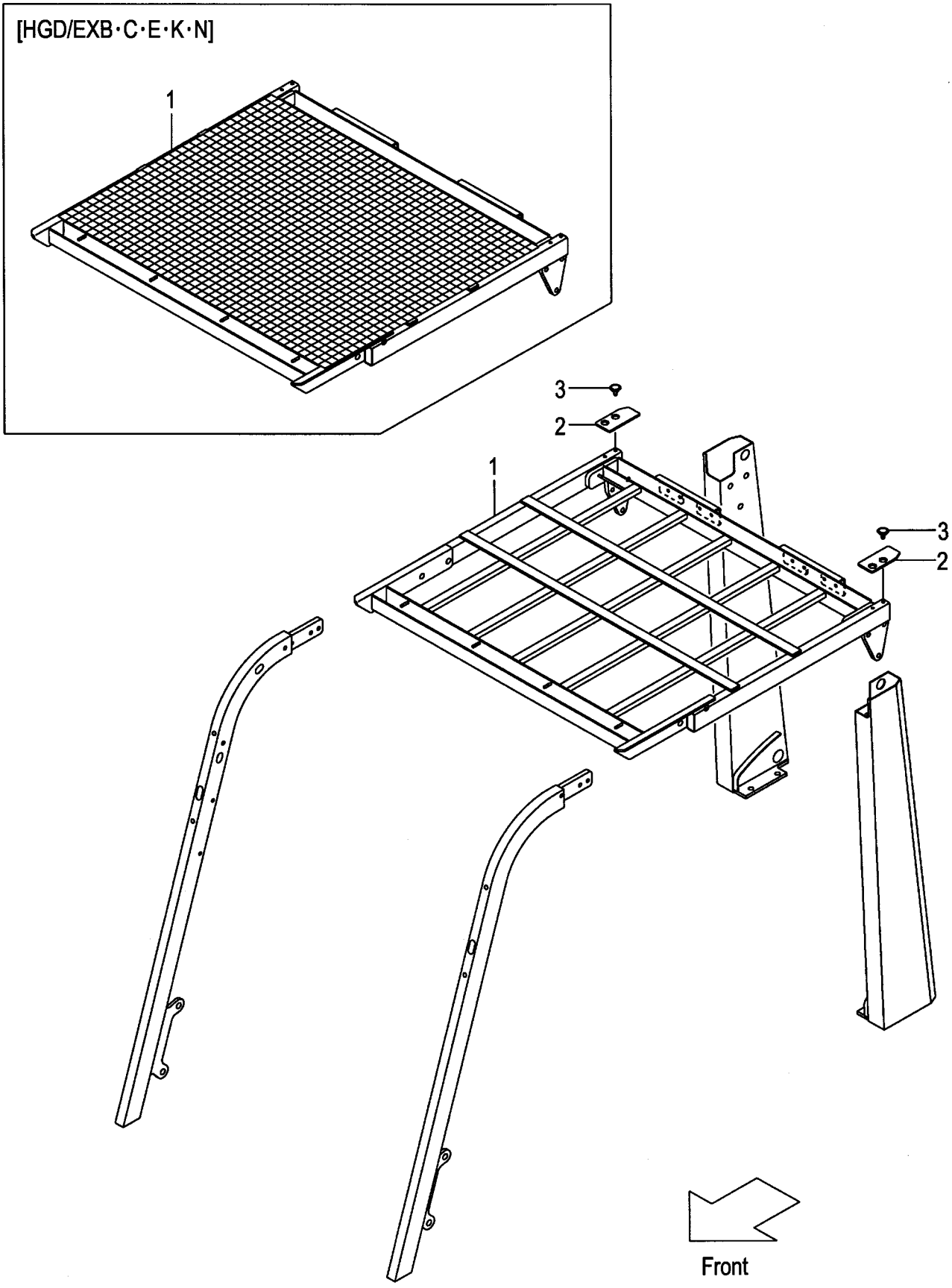

FIG.126

(F5025180)

A:FG20C6 FG20T6 FG25C6 FG25T6
B:FD20C6 FD20T6 FD25C6 FD25T6

Item No	Part No.	Mark	Description	Req'd	Remarks : Serial No.
1	518G2-80231		GUARD,HEAD ｶﾞｰﾄﾞ	1	[EXB][EXC][EXE][EXK]
-	539A2-60231		GUARD,HEAD ｶﾞｰﾄﾞ	1	[EXN]
-	539A2-90301		GUARD,HEAD ｶﾞｰﾄﾞ	1	[HGD/EXB&C&E&K]
-	539A2-90401		GUARD,HEAD ｶﾞｰﾄﾞ	1	[HGD/EXN]
-	539A2-80301		GUARD,HEAD ｶﾞｰﾄﾞ	1	[HGH100/EXB&C&E&N&K]
-	539A2-80501		GUARD,HEAD ｶﾞｰﾄﾞ	1	[HGH200/EXB&C&E&N&K]
2	218M5-12501		COVER ｶﾊﾞｰ	2	[EXB][EXC][EXE][EXK][EXN]
3	216G6-42541		CLIP ｸﾘｯﾌﾟ	4	[EXB][EXC][EXE][EXK][EXN]

FIG.127 FRONT PIPE

(F5025120) フロントパイプ

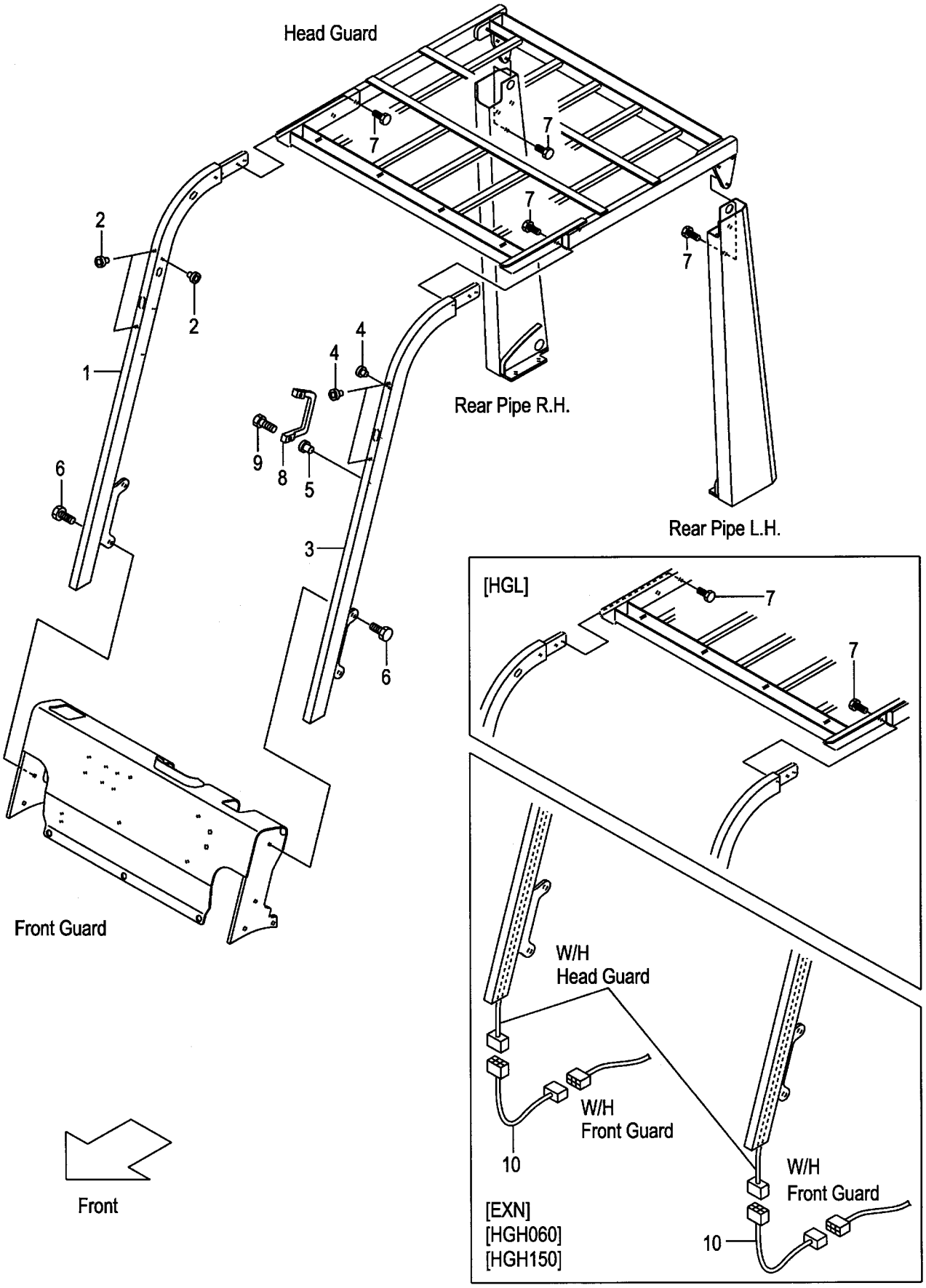

A:FG20C6 FG20T6 FG25C6 FG25T6 C:FD20C6 FD20T6 FD25C6 FD25T6
B:FG20W6 FG25W6 D:FD20W6 FD25W6

Item No	Part No.	Mark	Description		Req'd	Remarks : Serial No.
A1	239A5-10342		PIPE-ASSY,FRONT,RH	ﾌﾛﾝﾄﾊﾟｲﾌﾟｱｯｾﾝ	1	(WITHOUT SCB001,SCBCR) INC.1,2
-	539A5-00152		PIPE-ASSY,FRONT,RH	ﾌﾛﾝﾄﾊﾟｲﾌﾟｱｯｾﾝ	1	A,C
						[EXN] INC.1,2
-	236A5-10342		PIPE-ASSY,FRONT,RH	ﾌﾛﾝﾄﾊﾟｲﾌﾟｱｯｾﾝ	1	[HGL] INC.1,2
-	539A5-00152		PIPE-ASSY,FRONT,RH	ﾌﾛﾝﾄﾊﾟｲﾌﾟｱｯｾﾝ	1	[HGH060] INC.1,2
-	539A2-80172		PIPE-ASSY,FRONT,RH	ﾌﾛﾝﾄﾊﾟｲﾌﾟｱｯｾﾝ	1	[HGH100] INC.1,2
-	539A5-00172		PIPE-ASSY,FRONT,RH	ﾌﾛﾝﾄﾊﾟｲﾌﾟｱｯｾﾝ	1	[HGH150] INC.1,2
-	539A2-80192		PIPE-ASSY,FRONT,RH	ﾌﾛﾝﾄﾊﾟｲﾌﾟｱｯｾﾝ	1	[HGH200] INC.1,2
-	236A5-10342		PIPE-ASSY,FRONT,RH	ﾌﾛﾝﾄﾊﾟｲﾌﾟｱｯｾﾝ	1	A,C
						[HGL/EXB&C&E&K&N] INC.1,2
-	539A2-80172		PIPE-ASSY,FRONT,RH	ﾌﾛﾝﾄﾊﾟｲﾌﾟｱｯｾﾝ	1	A,C
						[HGH100/EXB&C&E&K&N] INC.1,2
-	539A2-80192		PIPE-ASSY,FRONT,RH	ﾌﾛﾝﾄﾊﾟｲﾌﾟｱｯｾﾝ	1	A,C
						[HGH200/EXB&C&E&K&N] INC.1,2
1	NO PART NO.	#	PIPE,FRONT,RH	ﾊﾟｲﾌﾟ	1	(WITHOUT SCB001,SCBCR)
-	NO PART NO.	#	PIPE,FRONT,RH	ﾊﾟｲﾌﾟ	1	A,C
						[EXN]
-	NO PART NO.	#	PIPE,FRONT,RH	ﾊﾟｲﾌﾟ	1	[HGL]
-	NO PART NO.	#	PIPE,FRONT,RH	ﾊﾟｲﾌﾟ	1	[HGH060]
-	NO PART NO.	#	PIPE,FRONT,RH	ﾊﾟｲﾌﾟ	1	[HGH100]
-	NO PART NO.	#	PIPE,FRONT,RH	ﾊﾟｲﾌﾟ	1	[HGH150]
-	NO PART NO.	#	PIPE,FRONT,RH	ﾊﾟｲﾌﾟ	1	[HGH200]
-	NO PART NO.	#	PIPE,FRONT,RH	ﾊﾟｲﾌﾟ	1	A,C
						[HGL/EXB&C&E&K&N]
-	NO PART NO.	#	PIPE,FRONT,RH	ﾊﾟｲﾌﾟ	1	A,C
						[HGH100/EXB&C&E&K&N]
-	NO PART NO.	#	PIPE,FRONT,RH	ﾊﾟｲﾌﾟ	1	A,C
						[HGH200/EXB&C&E&K&N]
2	514A5-12011		RIVET,POP	ﾘﾍﾞｯﾄ	3	(WITHOUT SCB001,SCBCR)
A2	239A5-10352		PIPE-ASSY,FRONT,LH	ﾌﾛﾝﾄﾊﾟｲﾌﾟｱｯｾﾝ	1	(WITHOUT SCB001,SCBCR) INC.3-5
-	539A5-00162		PIPE-ASSY,FRONT,LH	ﾌﾛﾝﾄﾊﾟｲﾌﾟｱｯｾﾝ	1	A,C
						[EXN] INC.3-5
-	236A5-10352		PIPE-ASSY,FRONT,LH	ﾌﾛﾝﾄﾊﾟｲﾌﾟｱｯｾﾝ	1	[HGL] INC.3-5
-	539A5-00162		PIPE-ASSY,FRONT,LH	ﾌﾛﾝﾄﾊﾟｲﾌﾟｱｯｾﾝ	1	[HGH060] INC.3-5
-	539A2-80182		PIPE-ASSY,FRONT,LH	ﾌﾛﾝﾄﾊﾟｲﾌﾟｱｯｾﾝ	1	[HGH100] INC.3-5
-	539A5-00182		PIPE-ASSY,FRONT,LH	ﾌﾛﾝﾄﾊﾟｲﾌﾟｱｯｾﾝ	1	[HGH150] INC.3-5
-	539A2-80202		PIPE-ASSY,FRONT,LH	ﾌﾛﾝﾄﾊﾟｲﾌﾟｱｯｾﾝ	1	[HGH200] INC.3-5
-	236A5-10352		PIPE-ASSY,FRONT,LH	ﾌﾛﾝﾄﾊﾟｲﾌﾟｱｯｾﾝ	1	A,C
						[HGL/EXB&C&E&K&N] INC.3-5
-	539A2-80182		PIPE-ASSY,FRONT,LH	ﾌﾛﾝﾄﾊﾟｲﾌﾟｱｯｾﾝ	1	A,C
						[HGH100/EXB&C&E&K&N] INC.3-5
-	539A2-80202		PIPE-ASSY,FRONT,LH	ﾌﾛﾝﾄﾊﾟｲﾌﾟｱｯｾﾝ	1	A,C
						[HGH200/EXB&C&E&K&N] INC.3-5
3	NO PART NO.	#	PIPE,FRONT,LH	ﾊﾟｲﾌﾟ	1	(WITHOUT SCB001,SCBCR)
-	NO PART NO.	#	PIPE,FRONT,LH	ﾊﾟｲﾌﾟ	1	A,C
						[EXN]
-	NO PART NO.	#	PIPE,FRONT,LH	ﾊﾟｲﾌﾟ	1	[HGL]
-	NO PART NO.	#	PIPE,FRONT,LH	ﾊﾟｲﾌﾟ	1	[HGH060]
-	NO PART NO.	#	PIPE,FRONT,LH	ﾊﾟｲﾌﾟ	1	[HGH100]
-	NO PART NO.	#	PIPE,FRONT,LH	ﾊﾟｲﾌﾟ	1	[HGH150]

FIG.127 FRONT PIPE

(F5025120) フロントパイプ

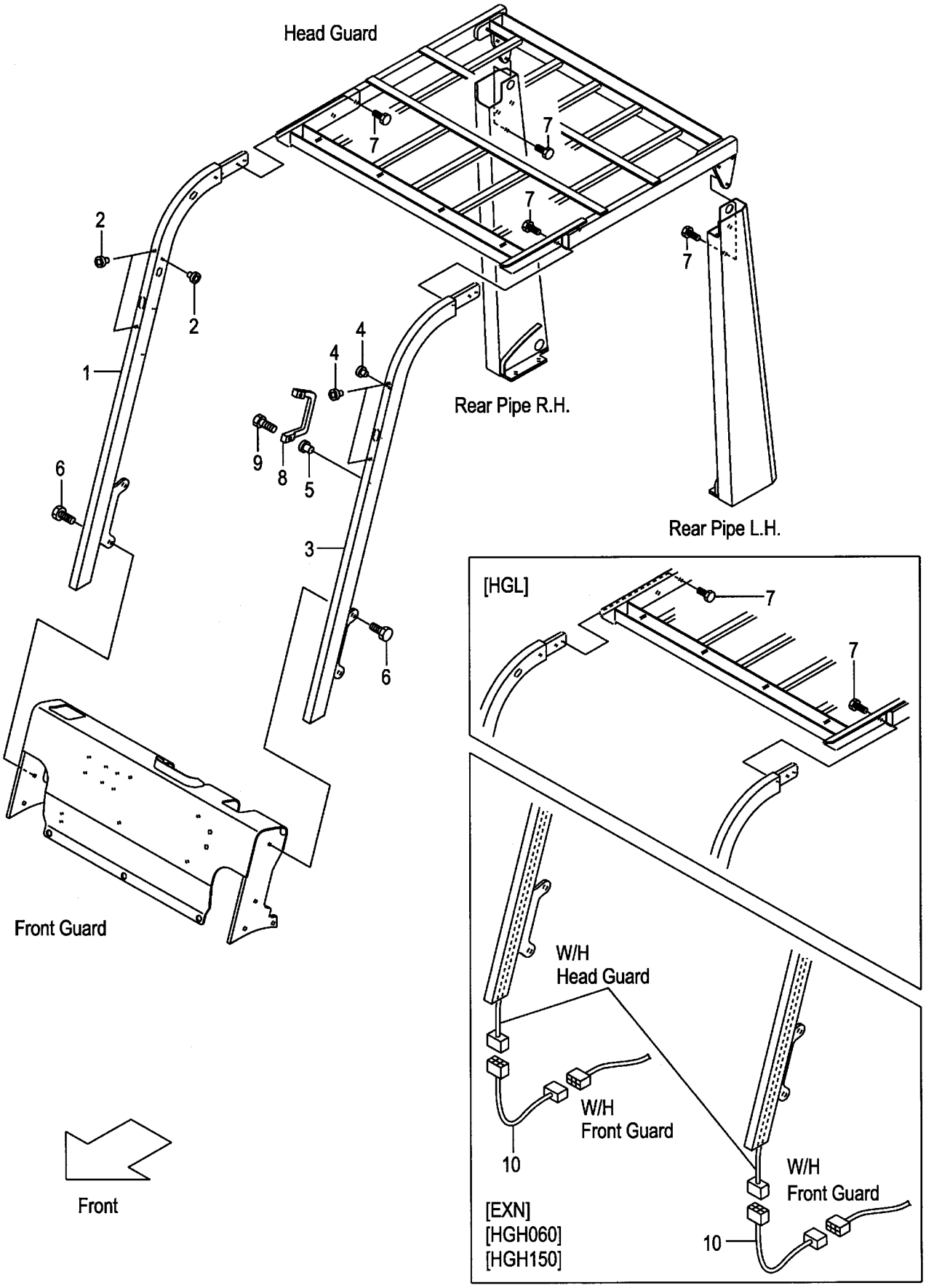

A:FG20C6 FG20T6 FG25C6 FG25T6 C:FD20C6 FD20T6 FD25C6 FD25T6
B:FG20W6 FG25W6 D:FD20W6 FD25W6

Item No	Part No.	Mark	Description		Req'd	Remarks : Serial No.
-	NO PART NO.	#	PIPE,FRONT,LH	ﾊﾟｲﾌﾟ	1	[HGH200]
-	NO PART NO.	#	PIPE,FRONT,LH	ﾊﾟｲﾌﾟ	1	A,C [HGL/EXB&C&E&K&N]
-	NO PART NO.	#	PIPE,FRONT,LH	ﾊﾟｲﾌﾟ	1	A,C [HGH100/EXB&C&E&K&N]
-	NO PART NO.	#	PIPE,FRONT,LH	ﾊﾟｲﾌﾟ	1	A,C [HGH200/EXB&C&E&K&N]
4	514A5-12011		RIVET,POP	ﾘﾍﾞｯﾄ	3	(WITHOUT SCB001,SCBCR)
5	516G5-13151		RIVET,POP	ﾘﾍﾞｯﾄ	2	(WITHOUT SCB001,SCBCR)
6	01186-12025		BOLT	ﾎﾞﾙﾄ	4	(WITHOUT SCB001,SCBCR)
7	01186-12035		BOLT	ﾎﾞﾙﾄ	10	(WITHOUT SCB001,SCBCR)
8	516G5-13051		GRIP	ｸﾞﾘｯﾌﾟ	1	(WITHOUT SCB001,SCBCR)
9	01171-06025		BOLT	ﾎﾞﾙﾄ	2	(WITHOUT SCB001,SCBCR)
10	229F2-42141		WIRE-HARNESS,R-COMB.	ﾜｲﾔﾊｰﾈｽ	2	A,C [EXN]
-	229F2-42141		WIRE-HARNESS,R-COMB.	ﾜｲﾔﾊｰﾈｽ	2	[HGH060][HGH150]

FIG.128 FRONT PIPE

(F5025190) フロントパイプ

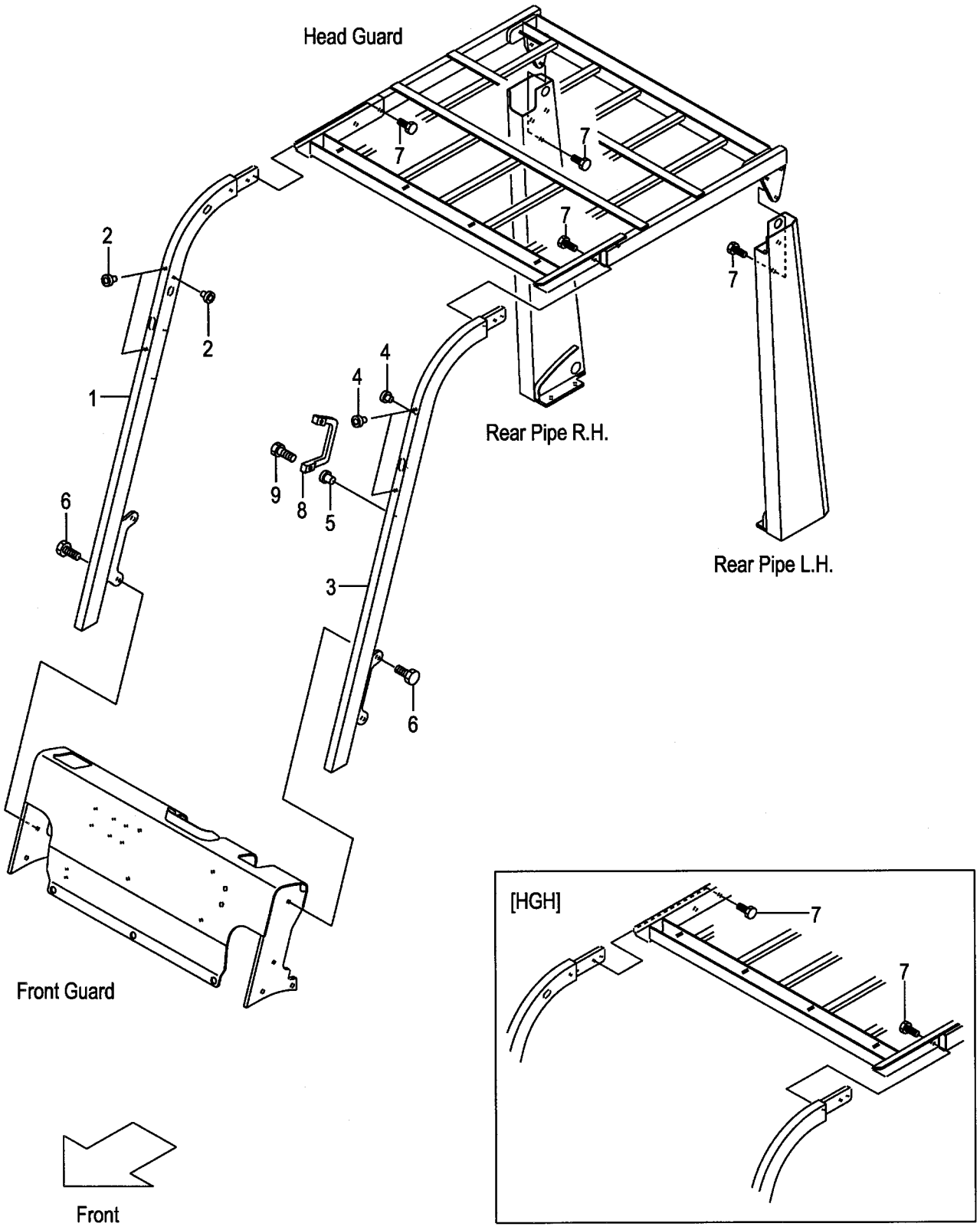

A:FG20C17 FG20T17 FG25C17 FG25T17
B:FD20C17 FD20T17 FD25C17 FD25T17

Item No	Part No.	Mark	Description		Req'd	Remarks : Serial No.
A1	236A5-10342		PIPE-ASSY,FRONT,RH	ﾌﾛﾝﾄﾊﾟｲﾌﾟｱｯｾﾝ	1	INC.1,2
-	239A5-10342		PIPE-ASSY,FRONT,RH	ﾌﾛﾝﾄﾊﾟｲﾌﾟｱｯｾﾝ	1	[HGH] INC.1,2
1	NO PART NO.	#	PIPE,FRONT,RH	ﾊﾟｲﾌﾟ	1	
-	NO PART NO.	#	PIPE,FRONT,RH	ﾊﾟｲﾌﾟ	1	[HGH]
2	514A5-12011		RIVET,POP	ﾘﾍﾞｯﾄ	3	
A2	236A5-10352		PIPE-ASSY,FRONT,LH	ﾌﾛﾝﾄﾊﾟｲﾌﾟｱｯｾﾝ	1	INC.3-5
-	239A5-10352		PIPE-ASSY,FRONT,LH	ﾌﾛﾝﾄﾊﾟｲﾌﾟｱｯｾﾝ	1	[HGH] INC.3-5
3	NO PART NO.	#	PIPE,FRONT,LH	ﾊﾟｲﾌﾟ	1	
-	NO PART NO.	#	PIPE,FRONT,LH	ﾊﾟｲﾌﾟ	1	[HGH]
4	514A5-12011		RIVET,POP	ﾘﾍﾞｯﾄ	3	
5	516G5-13151		RIVET,POP	ﾘﾍﾞｯﾄ	2	
6	01186-12025		BOLT	ﾎﾞﾙﾄ	4	
7	01186-12035		BOLT	ﾎﾞﾙﾄ	10	
8	516G5-13051		GRIP	ｸﾞﾘｯﾌﾟ	1	
9	01171-06025		BOLT	ﾎﾞﾙﾄ	2	

FIG.129 REAR PIPE

(F5025130) リヤーパイプ

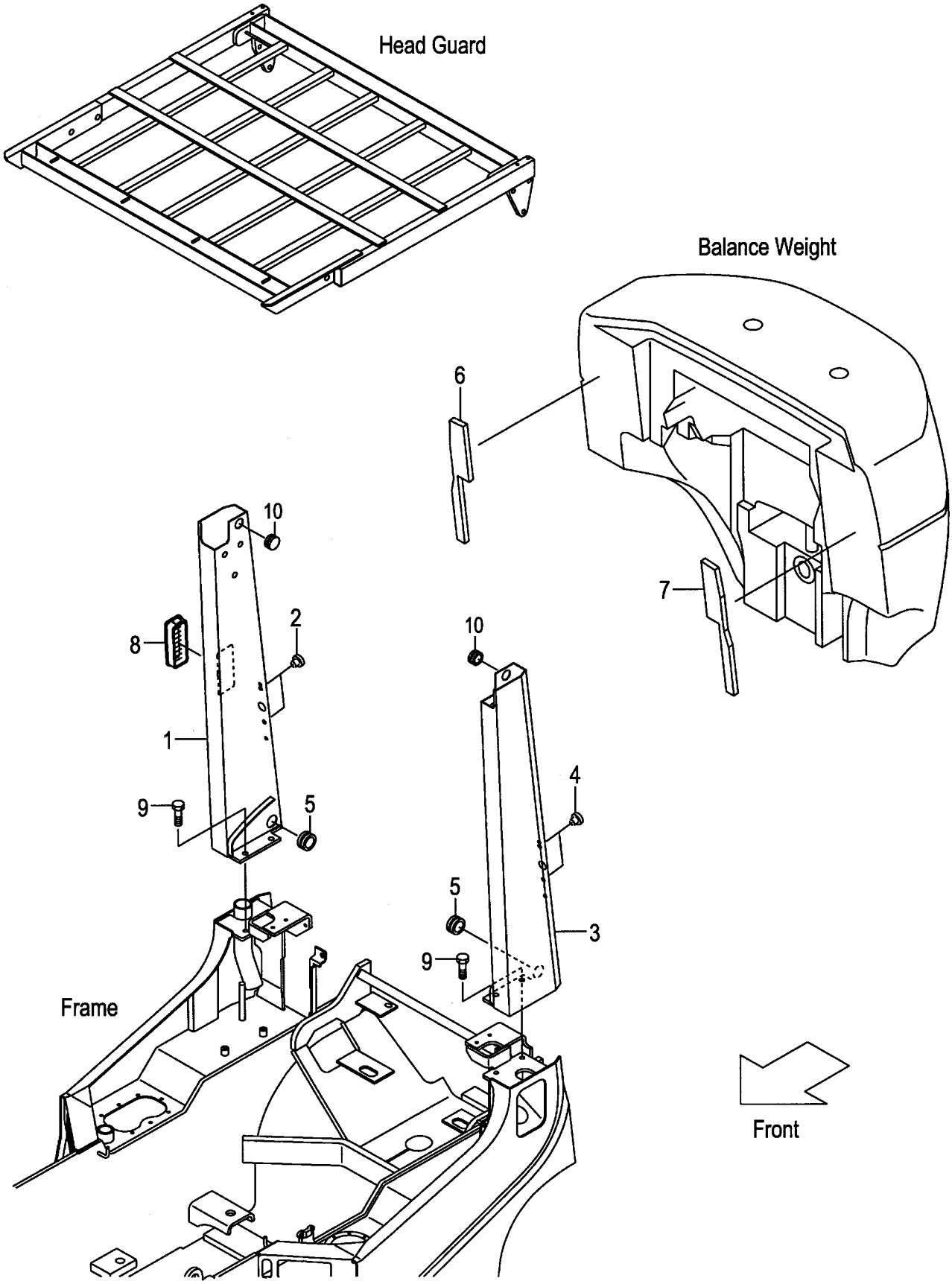

A:FG20C17 FG20T17 FG25C17 FG25T17 D:FD20C17 FD20T17 FD25C17 FD25T17
B:FG20C6 FG20T6 FG20W6 E:FD20C6 FD20T6 FD20W6
C:FG25C6 FG25T6 FG25W6 F:FD25C6 FD25T6 FD25W6

FIG.129
(F5025130)

Item No	Part No.	Mark	Description		Req'd	Remarks : Serial No.
A1	218G5-10111		PIPE-ASSY,REAR,RH	ﾘﾔｰﾊﾟｲﾌﾟｱｯｾﾝ	1	A,D (WITHOUT SCB001,SCBCR) INC.1,2
-	239A5-10111		PIPE-ASSY,REAR,RH	ﾘﾔｰﾊﾟｲﾌﾟｱｯｾﾝ	1	B,C,E,F (WITHOUT SCB001,SCBCR) INC.1,2
-	218G5-10111		PIPE-ASSY,REAR,RH	ﾘﾔｰﾊﾟｲﾌﾟｱｯｾﾝ	1	B,C,E,F [HGL] INC.1,2
-	239A5-10111		PIPE-ASSY,REAR,RH	ﾘﾔｰﾊﾟｲﾌﾟｱｯｾﾝ	1	A,D [HGH] INC.1,2
-	539A5-00111		PIPE-ASSY,REAR,RH	ﾘﾔｰﾊﾟｲﾌﾟｱｯｾﾝ	1	B,C,E,F [HGH060] INC.1,2
-	539A5-00351		PIPE-ASSY,REAR,RH	ﾘﾔｰﾊﾟｲﾌﾟｱｯｾﾝ	1	B,C,E,F [HGH100] INC.1,2
-	539A5-00131		PIPE-ASSY,REAR,RH	ﾘﾔｰﾊﾟｲﾌﾟｱｯｾﾝ	1	B,C,E,F [HGH150] INC.1,2
-	539A5-00371		PIPE-ASSY,REAR,RH	ﾘﾔｰﾊﾟｲﾌﾟｱｯｾﾝ	1	B,C,E,F [HGH200] INC.1,2
-	518G0-90111		PIPE-ASSY,REAR,RH	ﾘﾔｰﾊﾟｲﾌﾟｱｯｾﾝ	1	A,D [CAKB] INC.1,2
-	539A0-90111		PIPE-ASSY,REAR,RH	ﾘﾔｰﾊﾟｲﾌﾟｱｯｾﾝ	1	B,C,E,F [CAKB] INC.1,2 (WITHOUT CAKB/SCB001, CAKB/SCBCR)
-	518G0-90111		PIPE-ASSY,REAR,RH	ﾘﾔｰﾊﾟｲﾌﾟｱｯｾﾝ	1	B,C,E,F [CAKB/HGL] INC.1,2
1	NO PART NO.	#	PIPE,REAR,RH	ﾊﾟｲﾌﾟ	1	A,D (WITHOUT SCB001,SCBCR)
-	NO PART NO.	#	PIPE,REAR,RH	ﾊﾟｲﾌﾟ	1	B,C,E,F (WITHOUT SCB001,SCBCR)
-	NO PART NO.	#	PIPE,REAR,RH	ﾊﾟｲﾌﾟ	1	B,C,E,F [HGL]
-	NO PART NO.	#	PIPE,REAR,RH	ﾊﾟｲﾌﾟ	1	A,D [HGH]
-	NO PART NO.	#	PIPE,REAR,RH	ﾊﾟｲﾌﾟ	1	B,C,E,F [HGH060]
-	NO PART NO.	#	PIPE,REAR,RH	ﾊﾟｲﾌﾟ	1	B,C,E,F [HGH100]
-	NO PART NO.	#	PIPE,REAR,RH	ﾊﾟｲﾌﾟ	1	B,C,E,F [HGH150]
-	NO PART NO.	#	PIPE,REAR,RH	ﾊﾟｲﾌﾟ	1	B,C,E,F [HGH200]
-	NO PART NO.	#	PIPE,REAR,RH	ﾊﾟｲﾌﾟ	1	A,D [CAKB]
-	NO PART NO.	#	PIPE,REAR,RH	ﾊﾟｲﾌﾟ	1	B,C,E,F [CAKB] (WITHOUT CAKB/SCB001, CAKB/SCBCR)
-	NO PART NO.	#	PIPE,REAR,RH	ﾊﾟｲﾌﾟ	1	B,C,E,F [CAKB/HGL]
2	514A5-12011		RIVET,POP	ﾘﾍﾞｯﾄ	2	(WITHOUT SCB001,SCBCR)

FIG.129 REAR PIPE

(F5025130) リヤーパイプ

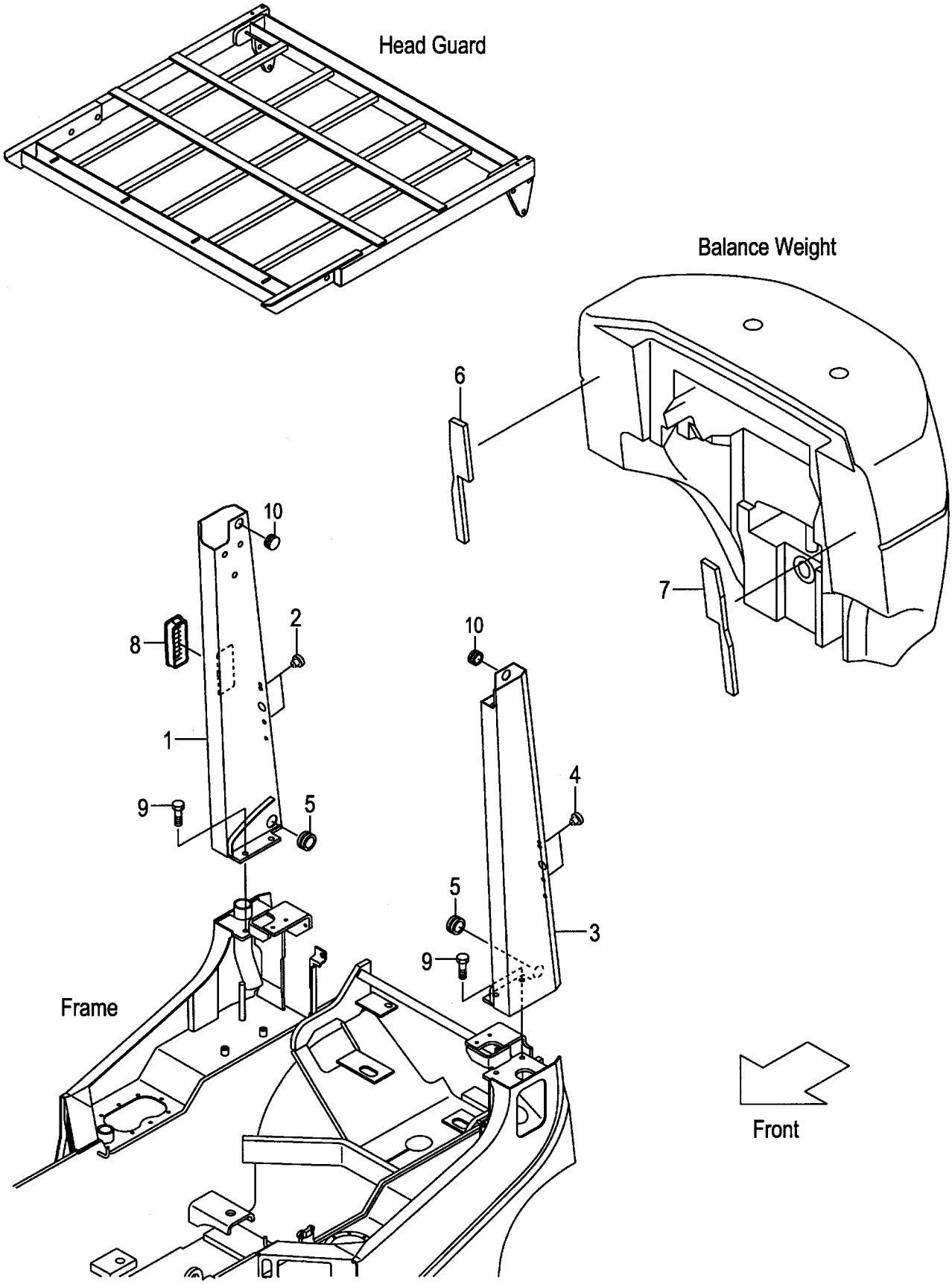

A:FG20C17 FG20T17 FG25C17 FG25T17 D:FD20C17 FD20T17 FD25C17 FD25T17
B:FG20C6 FG20T6 FG20W6 E:FD20C6 FD20T6 FD20W6
C:FG25C6 FG25T6 FG25W6 F:FD25C6 FD25T6 FD25W6

FIG.129
(F5025130)

Item No	Part No.	Mark	Description		Req'd	Remarks : Serial No.
A2	218G5-10121		PIPE-ASSY,REAR,LH	ﾘﾔｰﾊﾟｲﾌﾟｱｯｾﾝ	1	A,D (WITHOUT SCB001,SCBCR) INC.3,4
-	239A5-10121		PIPE-ASSY,REAR,LH	ﾘﾔｰﾊﾟｲﾌﾟｱｯｾﾝ	1	B,C,E,F (WITHOUT SCB001,SCBCR) INC.3,4
-	218G5-10121		PIPE-ASSY,REAR,LH	ﾘﾔｰﾊﾟｲﾌﾟｱｯｾﾝ	1	B,C,E,F [HGL] INC.3,4
-	239A5-10121		PIPE-ASSY,REAR,LH	ﾘﾔｰﾊﾟｲﾌﾟｱｯｾﾝ	1	A,D [HGH] INC.3,4
-	539A5-00121		PIPE-ASSY,REAR,LH	ﾘﾔｰﾊﾟｲﾌﾟｱｯｾﾝ	1	B,C,E,F [HGH060] INC.3,4
-	539A5-00361		PIPE-ASSY,REAR,LH	ﾘﾔｰﾊﾟｲﾌﾟｱｯｾﾝ	1	B,C,E,F [HGH100] INC.3,4
-	539A5-00141		PIPE-ASSY,REAR,LH	ﾘﾔｰﾊﾟｲﾌﾟｱｯｾﾝ	1	B,C,E,F [HGH150] INC.3,4
-	539A5-00381		PIPE-ASSY,REAR,LH	ﾘﾔｰﾊﾟｲﾌﾟｱｯｾﾝ	1	B,C,E,F [HGH200] INC.3,4
-	218G5-10121		PIPE-ASSY,REAR,LH	ﾘﾔｰﾊﾟｲﾌﾟｱｯｾﾝ	1	B,C,E,F [CAKB/HGL] INC.3,4
3	NO PART NO.	#	PIPE,REAR,LH	ﾊﾟｲﾌﾟ	1	A,D (WITHOUT SCB001,SCBCR)
-	NO PART NO.	#	PIPE,REAR,LH	ﾊﾟｲﾌﾟ	1	B,C,E,F (WITHOUT SCB001,SCBCR)
-	NO PART NO.	#	PIPE,REAR,LH	ﾊﾟｲﾌﾟ	1	B,C,E,F [HGL]
-	NO PART NO.	#	PIPE,REAR,LH	ﾊﾟｲﾌﾟ	1	A,D [HGH]
-	NO PART NO.	#	PIPE,REAR,LH	ﾊﾟｲﾌﾟ	1	B,C,E,F [HGH060]
-	NO PART NO.	#	PIPE,REAR,LH	ﾊﾟｲﾌﾟ	1	B,C,E,F [HGH100]
-	NO PART NO.	#	PIPE,REAR,LH	ﾊﾟｲﾌﾟ	1	B,C,E,F [HGH150]
-	NO PART NO.	#	PIPE,REAR,LH	ﾊﾟｲﾌﾟ	1	B,C,E,F [HGH200]
-	NO PART NO.	#	PIPE,REAR,LH	ﾊﾟｲﾌﾟ	1	B,C,E,F [CAKB/HGL]
4	514A5-12011		RIVET,POP	ﾘﾍﾞｯﾄ	2	(WITHOUT SCB001,SCBCR)
5	524W5-12091		GROMMET	ｸﾞﾛﾒｯﾄ	2	(WITHOUT SCB001,SCBCR)
6	239A5-12401		RUBBER,WEIGHT,RH	ﾗﾊﾞｰ	1	(WITHOUT SCB001,SCBCR)
7	239A5-12411		RUBBER,WEIGHT,LH	ﾗﾊﾞｰ	1	(WITHOUT SCB001,SCBCR)
8	230C1-02041		COVER,AIR-INTAKE	ｶﾊﾞｰ	1	(WITHOUT CAKB,SCB001,SCBCR)
9	01186-12025		BOLT	ﾎﾞﾙﾄ	4	(WITHOUT SCB001,SCBCR)
10	27662-62721		GROMMET	ｸﾞﾛﾒｯﾄ	2	A:11005- B,C:65038- D:11003- E,F:83105- (WITHOUT SCB001,SCBCR)

FIG.130 REAR PIPE [EXB][EXC][EXE][EXK][EXN]

(F5025140) ﾘﾔｰﾊﾟｲﾌﾟ

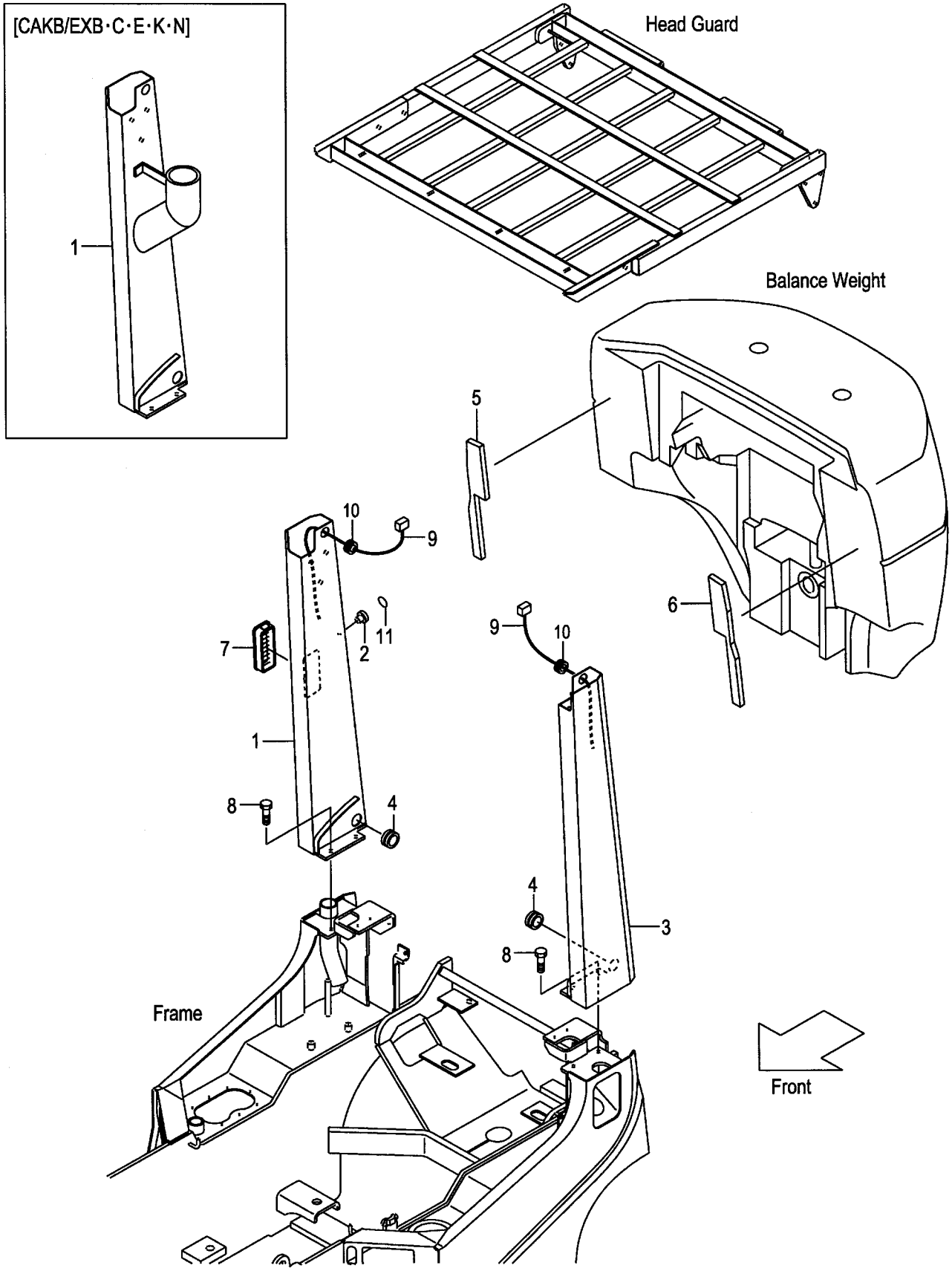

A:FG20C6 FG20T6 FG25C6 FG25T6
B:FD20C6 FD20T6 FD25C6 FD25T6

Item No	Part No.	Mark	Description		Req'd	Remarks : Serial No.
A1	539A2-80111		PIPE-ASSY,REAR,RH	ﾘﾔｰﾊﾟｲﾌﾟｱｯｾﾝ	1	[EXB][EXC][EXE][EXK] INC.1,2
-	539A2-60111		PIPE-ASSY,REAR,RH	ﾘﾔｰﾊﾟｲﾌﾟｱｯｾﾝ	1	[EXN] INC.1,2
-	518G2-80101		PIPE-ASSY,REAR,RH	ﾘﾔｰﾊﾟｲﾌﾟｱｯｾﾝ	1	[HGL/EXB&C&E&K&N] INC.1,2
-	539A2-80151		PIPE-ASSY,REAR,RH	ﾘﾔｰﾊﾟｲﾌﾟｱｯｾﾝ	1	[HGH100/EXB&C&E&K&N] INC.1,2
-	539A2-80161		PIPE-ASSY,REAR,RH	ﾘﾔｰﾊﾟｲﾌﾟｱｯｾﾝ	1	[HGH200/EXB&C&E&K&N] INC.1,2
-	539C0-90051		PIPE-ASSY,REAR,RH	ﾘﾔｰﾊﾟｲﾌﾟｱｯｾﾝ	1	[CAKB/HGL/EXB&C&E&K&N] INC.1,2
-	539C0-90061		PIPE-ASSY,REAR,RH	ﾘﾔｰﾊﾟｲﾌﾟｱｯｾﾝ	1	[CAKB/EXN] INC.1,2
-	518G0-90211		PIPE-ASSY,REAR,RH	ﾘﾔｰﾊﾟｲﾌﾟｱｯｾﾝ	1	[CAKB/HGL/EXB&C&E&K&N] INC.1,2
1	NO PART NO.	#	PIPE,REAR,RH	ﾊﾟｲﾌﾟ	1	[EXB][EXC][EXE][EXK]
-	NO PART NO.	#	PIPE,REAR,RH	ﾊﾟｲﾌﾟ	1	[EXN]
-	NO PART NO.	#	PIPE,REAR,RH	ﾊﾟｲﾌﾟ	1	[HGL/EXB&C&E&K&N]
-	NO PART NO.	#	PIPE,REAR,RH	ﾊﾟｲﾌﾟ	1	[HGH100/EXB&C&E&K&N]
-	NO PART NO.	#	PIPE,REAR,RH	ﾊﾟｲﾌﾟ	1	[HGH200/EXB&C&E&K&N]
-	NO PART NO.	#	PIPE,REAR,RH	ﾊﾟｲﾌﾟ	1	[CAKB/HGL/EXB&C&E&K&N]
-	NO PART NO.	#	PIPE,REAR,RH	ﾊﾟｲﾌﾟ	1	[CAKB/EXN]
-	NO PART NO.	#	PIPE,REAR,RH	ﾊﾟｲﾌﾟ	1	[CAKB/HGL/EXB&C&E&K&N]
2	514A5-12011		RIVET,POP	ﾘﾍﾞｯﾄ	1	[EXB][EXC][EXE][EXK][EXN]
3	539A2-80221		PIPE,REAR,LH	ﾊﾟｲﾌﾟ	1	[EXB][EXC][EXE][EXK]
-	539A2-60221		PIPE,REAR,LH	ﾊﾟｲﾌﾟ	1	[EXN]
-	518G2-80121		PIPE,REAR,LH	ﾊﾟｲﾌﾟ	1	[HGL/EXB&C&E&K&N]
-	539A2-80371		PIPE,REAR,LH	ﾊﾟｲﾌﾟ	1	[HGH100/EXB&C&E&K&N]
-	539A2-80571		PIPE,REAR,LH	ﾊﾟｲﾌﾟ	1	[HGH200/EXB&C&E&K&N]
-	518G2-80121		PIPE,REAR,LH	ﾊﾟｲﾌﾟ	1	[CAKB/HGL/EXB&C&E&K&N]
4	524W5-12091		GROMMET	ｸﾞﾛﾒｯﾄ	2	[EXB][EXC][EXE][EXK][EXN]
5	239A5-12401		RUBBER,WEIGHT,RH	ﾗﾊﾞｰ	1	[EXB][EXC][EXE][EXK][EXN]
6	239A5-12411		RUBBER,WEIGHT,LH	ﾗﾊﾞｰ	1	[EXB][EXC][EXE][EXK][EXN]
7	230C1-02041		COVER,AIR-INTAKE	ｶﾊﾞｰ	1	[EXB][EXC][EXE][EXK][EXN] (WITHOUT CAKB/EX)
8	01186-12025		BOLT	ﾎﾞﾙﾄ	4	[EXB][EXC][EXE][EXK][EXN]
9	514T2-72061		WIRE-HARNESS,R-COMB.	ﾜｲﾔﾊｰﾈｽ	2	[EXB][EXC][EXE][EXK][EXN]
10	22679-47301		GROMMET	ｸﾞﾛﾒｯﾄ	2	[EXB][EXC][EXE][EXK][EXN]
11	539A2-82251		SEAL,COVER	ｼｰﾙ	1	[EXB][EXC][EXE][EXK][EXN]

FIG.131 REAR PIPE [RW]

(F50251A0) リヤーパイプ

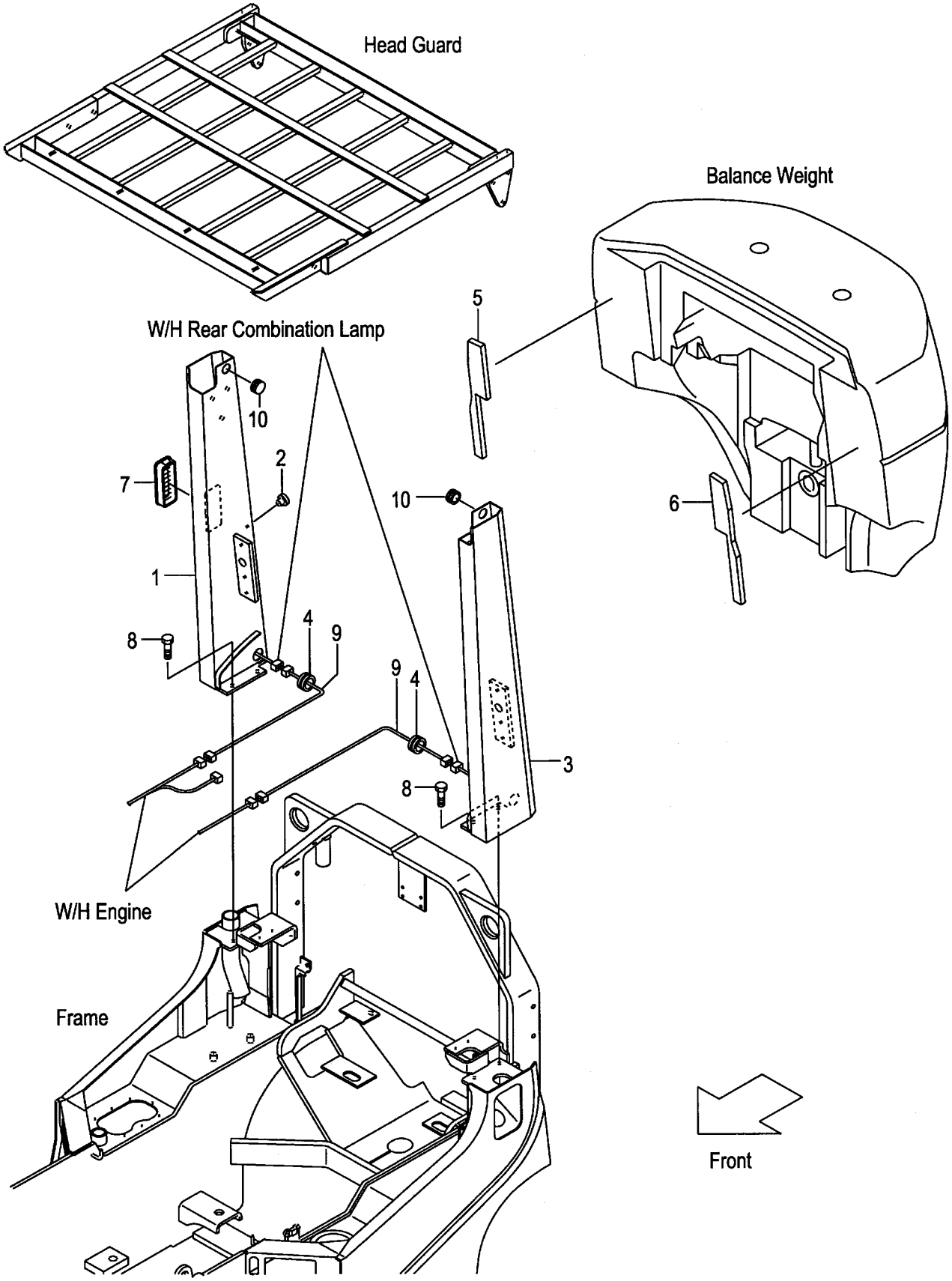

A:FG25C6 FG25T6 FG25W6
B:FD25C6 FD25T6 FD25W6

Item No	Part No.	Mark	Description		Req'd	Remarks : Serial No.
A1	539C1-90101		PIPE-ASSY,REAR,RH	ﾘﾔｰﾊﾟｲﾌﾟｱｯｾﾝ	1	[RW] INC.1,2
1	NO PART NO.	#	PIPE,REAR,RH	ﾊﾟｲﾌﾟ	1	[RW]
2	514A5-12011		RIVET,POP	ﾘﾍﾞｯﾄ	1	[RW]
3	539C1-90211		PIPE,REAR,LH	ﾊﾟｲﾌﾟ	1	[RW]
4	524W5-12091		GROMMET	ｸﾞﾛﾒｯﾄ	2	[RW]
5	239A5-12401		RUBBER,WEIGHT,RH	ﾗﾊﾞｰ	1	[RW]
6	239A5-12411		RUBBER,WEIGHT,LH	ﾗﾊﾞｰ	1	[RW]
7	230C1-02041		COVER,AIR-INTAKE	ｶﾊﾞｰ	1	[RW]
8	01186-12025		BOLT	ﾎﾞﾙﾄ	4	[RW]
9	229F2-42141		WIRE-HARNESS,R-COMB.	ﾜｲﾔﾊｰﾈｽ	2	[RW]
10	27662-62721		GROMMET	ｸﾞﾛﾒｯﾄ	2	A:65038- B:83105- [RW]

FIG.132 FRONT LAMP BRACKET

(F5025150) フロントランプブラケット

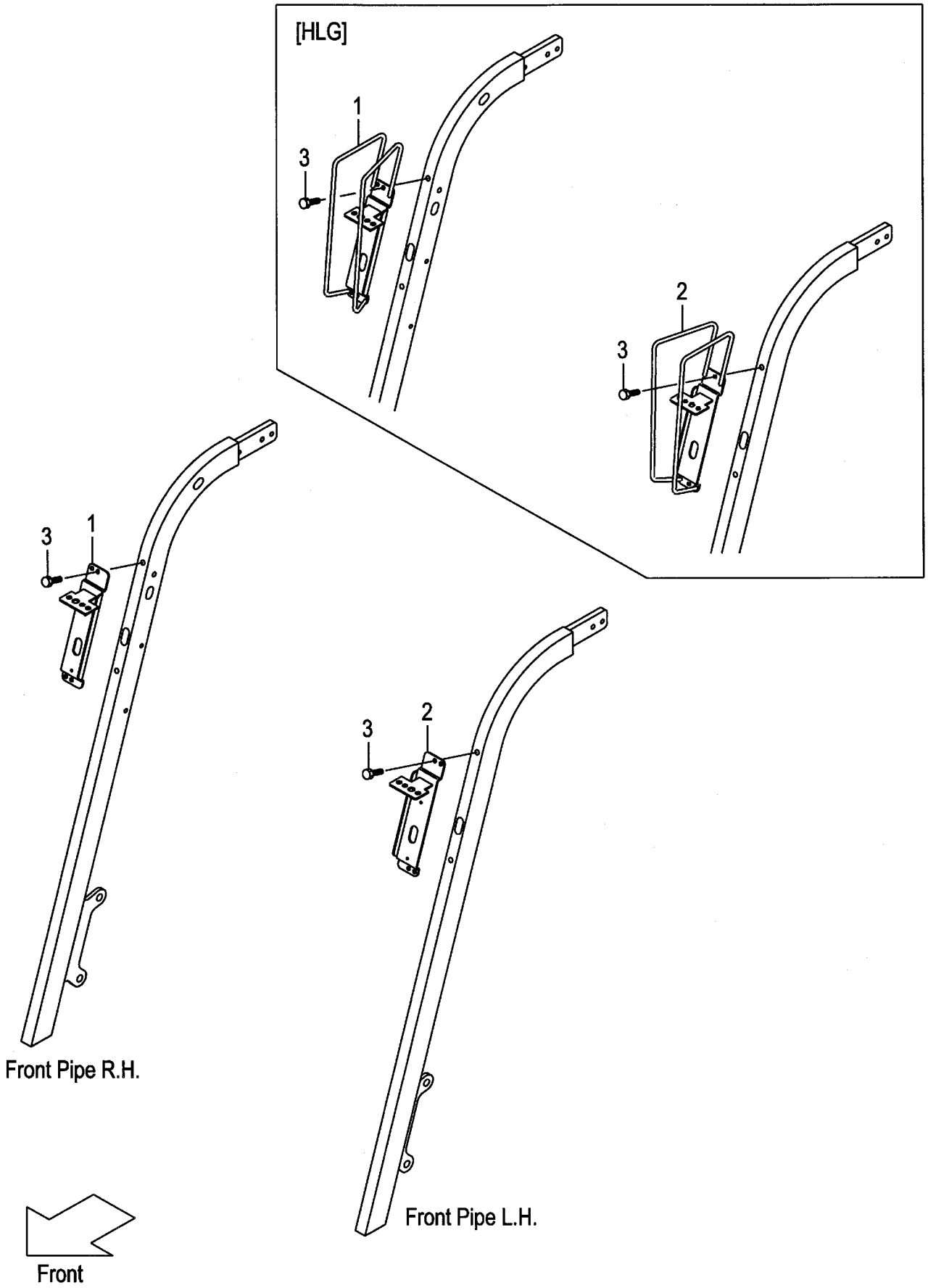

A:FG20C17 FG20T17 FG25C17 FG25T17 C:FD20C17 FD20T17 FD25C17 FD25T17
B:FG20C6 FG20T6 FG25C6 FG25T6 FG20W6 FG25W6 D:FD20C6 FD20T6 FD25C6 FD25T6 FD20W6 FD25W6

Item No	Part No.	Mark	Description	Req'd	Remarks : Serial No.
1	239A5-12501		BRACKET,HEAD-LAMP,RH ﾌﾞﾗｹｯﾄ	1	
-	539A5-12041		BRACKET,HEAD-LAMP,RH ﾌﾞﾗｹｯﾄ	1	[HLG]
2	239A5-12521		BRACKET,HEAD-LAMP,LH ﾌﾞﾗｹｯﾄ	1	
-	539A5-12011		BRACKET,HEAD-LAMP,LH ﾌﾞﾗｹｯﾄ	1	[HLG]
3	01183-08016		BOLT ﾎﾞﾙﾄ	4	

FIG.133 FRONT LAMP BRACKET [HL][BKH]

(F50251B0) フロントランプブラケット

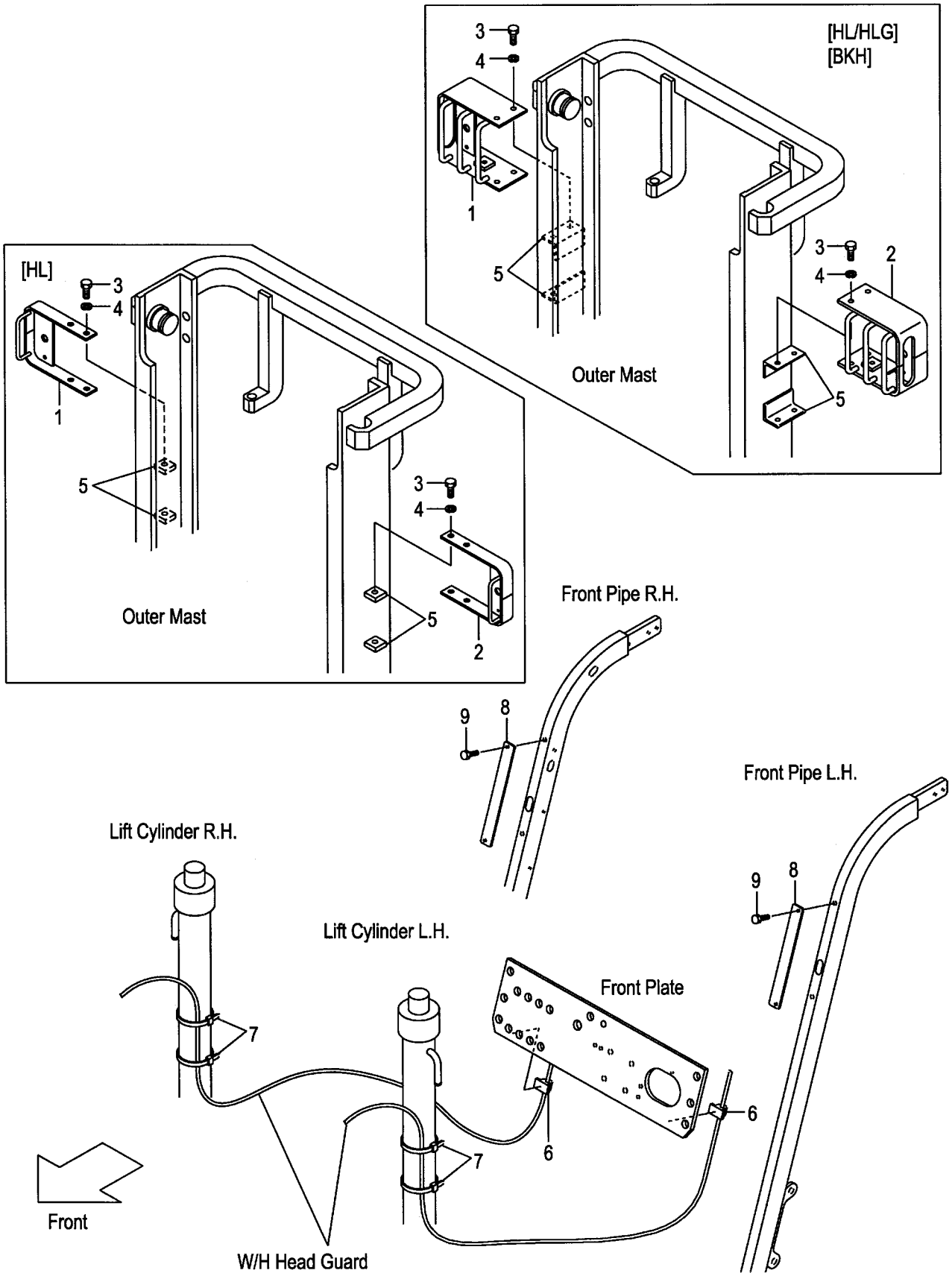

A:FG20C17 FG20T17 FG25C17 FG25T17 C:FD20C17 FD20T17 FD25C17 FD25T17 (F50251B0)
B:FG20C6 FG20T6 FG25C6 FG25T6 FG20W6 FG25W6 D:FD20C6 FD20T6 FD25C6 FD25T6 FD20W6 FD25W6

Item No	Part No.	Mark	Description	Req'd	Remarks : Serial No.
1	534A9-22001		BRACKET,HEAD-LAMP,RH ﾌﾞﾗｹｯﾄ	1	[HL]
-	534A4-22001		BRACKET,HEAD-LAMP,RH ﾌﾞﾗｹｯﾄ	1	[HL/HLG][BKH]
2	534A9-22011		BRACKET,HEAD-LAMP,LH ﾌﾞﾗｹｯﾄ	1	[HL]
-	534A4-22011		BRACKET,HEAD-LAMP,LH ﾌﾞﾗｹｯﾄ	1	[HL/HLG][BKH]
3	01100-12020		BOLT ﾎﾞﾙﾄ	4	[HL][HL/HLG][BKH]
4	02010-00012		WASHER ﾜｯｼｬ	4	[HL][HL/HLG][BKH]
5	534A9-22101		PLATE,TAPPED ﾌﾟﾚｰﾄ	4	[HL]
-	534A4-22101		BRACKET ﾌﾞﾗｹｯﾄ	4	[HL/HLG][BKH]
6	27732-42221		CLAMP,HARNESS ｸﾗﾝﾌﾟ	2	[HL][HL/HLG][BKH]
7	04913-11380		BAND,INSHULOCK ﾊﾞﾝﾄﾞ	4	[HL][HL/HLG][BKH]
8	534A9-22301		PLATE ﾌﾟﾚｰﾄ	2	[HL][HL/HLG][BKH]
9	01183-08016		BOLT ﾎﾞﾙﾄ	4	[HL][HL/HLG][BKH]

FIG.134 REAR LAMP BRACKET

(F5025160) リヤーランプブラケット

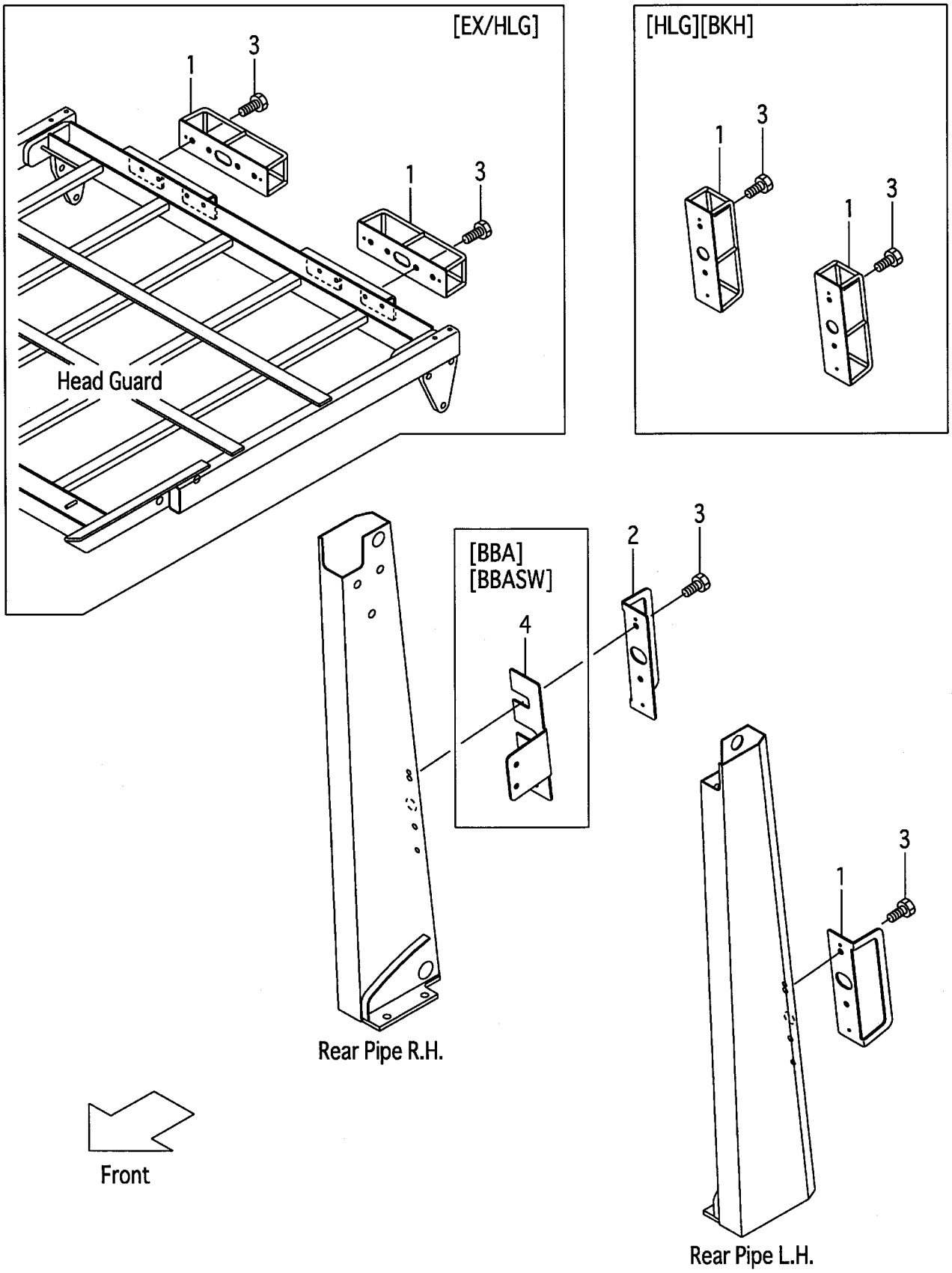

A:FG20C17 FG20T17 FG25C17 FG25T17 D:FD20C17 FD20T17 FD25C17 FD25T17
B:FG20C6 FG20T6 FG25C6 FG25T6 E:FD20C6 FD20T6 FD25C6 FD25T6
C:FG20W6 FG25W6 F:FD20W6 FD25W6

FIG.134
(F5025160)

Item No	Part No.	Mark	Description		Req'd	Remarks : Serial No.
1	534A5-12321		GUARD,REAR-LAMP,LH	ｶﾞｰﾄﾞ	1	(WITHOUT EX)
-	524W5-13351		GUARD,REAR-LAMP	ｶﾞｰﾄﾞ	2	[HLG][BKH]
-	539A5-12101		GUARD,REAR-LAMP	ｶﾞｰﾄﾞ	2	B:65420- E:83846- [EX/HLG]
2	534A5-12331		GUARD,REAR-LAMP,RH	ｶﾞｰﾄﾞ	1	(WITHOUT EX,HLG,BKH)
3	01183-08016		BOLT	ﾎﾞﾙﾄ	4	(WITHOUT EX)
-	01183-08016		BOLT	ﾎﾞﾙﾄ	8	B:65420- E:83846- [EX/HLG]
4	539A1-32001		BRACKET	ﾌﾞﾗｹｯﾄ	1	[BBA][BBASW]

FIG.135 HEAD GUARD PARTS

(F5025170) ﾍｯﾄﾞｶﾞｰﾄﾞﾊﾟｰﾂ

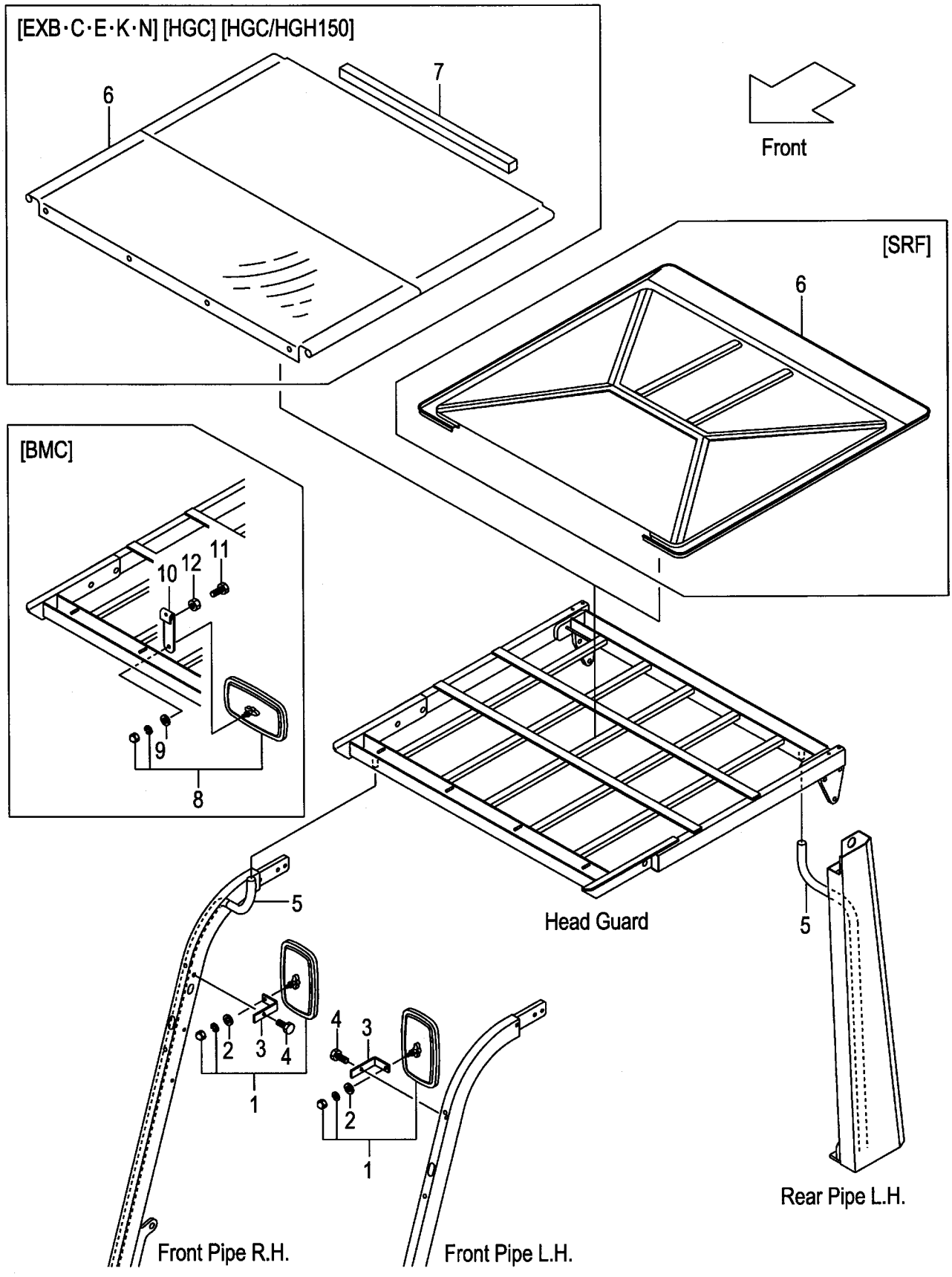

A:FG20C17 FG20T17 FG25C17 FG25T17 D:FD20C17 FD20T17 FD25C17 FD25T17
B:FG20C6 FG20T6 FG25C6 FG25T6 E:FD20C6 FD20T6 FD25C6 FD25T6
C:FG20W6 FG25W6 F:FD20W6 FD25W6

FIG.135
(F5025170)

Item No	Part No.	Mark	Description		Req'd	Remarks : Serial No.
1	239A9-92001		MIRROR	ミラー	2	
2	222A9-32011		WASHER	ワッシャ	2	
3	534A5-12571		BRACKET,BACK-MIRROR	ブラケット	2	
4	514A5-12021		BOLT	ボルト	2	
5	516G5-12511		HOSE,VINYL	ホース	2	A,D
-	534A5-00401		HOSE,VINYL	ホース	2	B,C,E,F
-	516M5-12311		HOSE,VINYL	ホース	2	B,E
						[EXN]
-	516G5-12511		HOSE,VINYL	ホース	2	B,C,E,F
						[HGL]
-	534A5-00401		HOSE,VINYL	ホース	2	A,D
						[HGH]
-	516M5-12311		HOSE,VINYL	ホース	2	B,C,E,F
						[HGH060]
-	534A5-00411		HOSE,VINYL	ホース	2	B,C,E,F
						[HGH150]
6	539A5-12001		CANVAS	キャンバス	1	B,E
						[EXB][EXC][EXE][EXK][EXN]
						(WITHOUT HGCZZZ/EX)
-	539A5-10501		ROOF,SUN	ルーフ	1	[SRF]
-	539A5-12001		CANVAS	キャンバス	1	[HGC]
-	539A5-00261		CANVAS	キャンバス	1	B,C,E,F
						[HGC/HGH150]
7	516G5-13511		SUPPORTER	サポータ	1	B,E
						[EXB][EXC][EXE][EXK][EXN]
						(WITHOUT HGCZZZ/EX)
-	516G5-13511		SUPPORTER	サポータ	1	[HGC]
-	516G5-13511		SUPPORTER	サポータ	1	B,C,E,F
						[HGC/HGH150]
8	239A9-92001		MIRROR	ミラー	1	[BMC]
9	222A9-32011		WASHER	ワッシャ	1	[BMC]
10	539A9-32001		BRACKET,BACK-MIRROR	ブラケット	1	[BMC]
11	01100-08025		BOLT	ボルト	2	[BMC]
12	01402-00008		NUT	ナット	2	[BMC]

FIG.136 ACCEL PEDAL (GASOLINE)

(F5025210) アクセルペダル

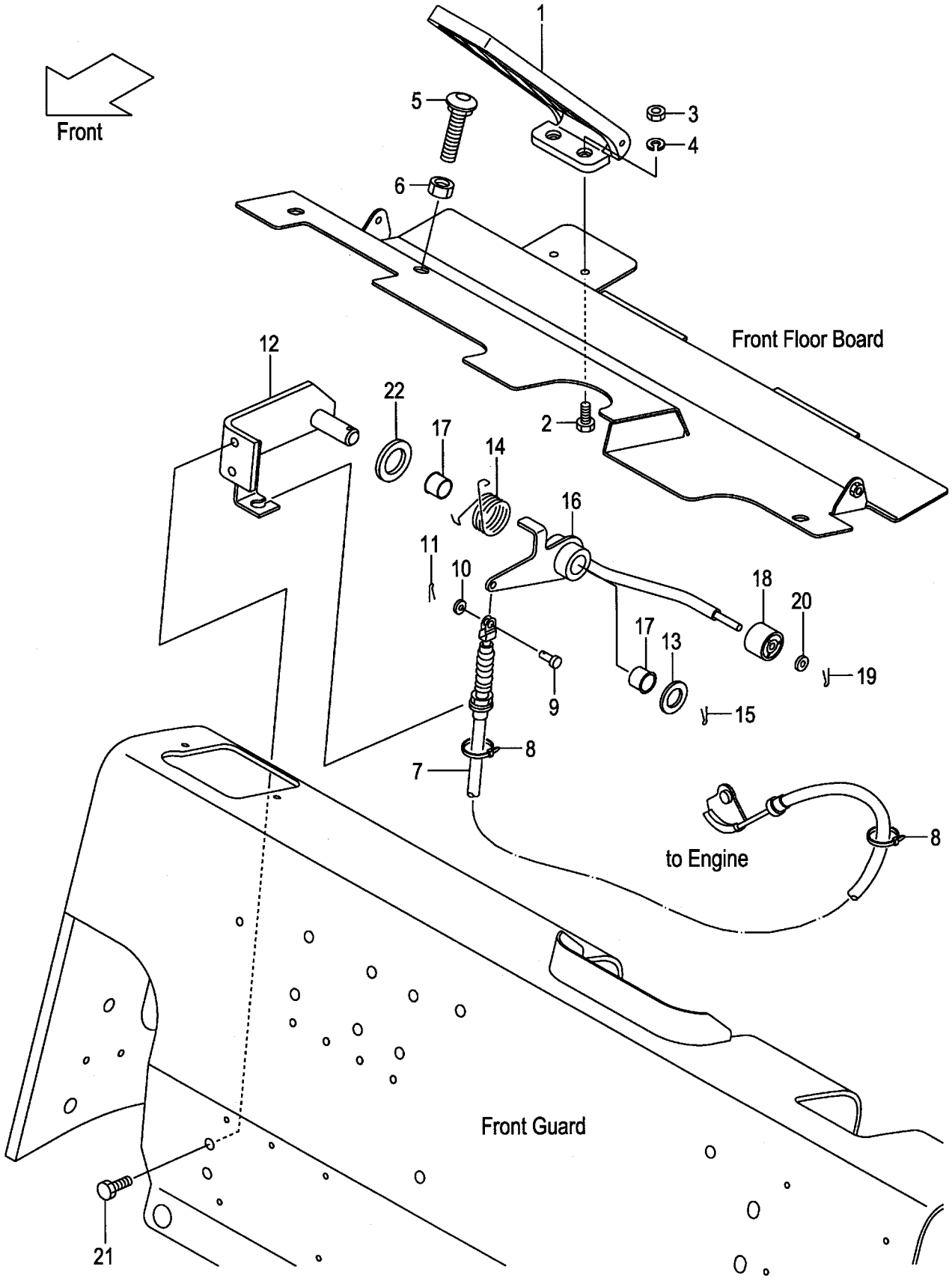

A:FG20C17 FG20T17 FG25C17 FG25T17
B:FG20C6 FG20T6 FG25C6 FG25T6 FG20W6 FG25W6

Item No	Part No.	Mark	Description		Req'd	Remarks : Serial No.
1	214A5-22051		PEDAL,ACCEL	ﾍﾟﾀﾞﾙ	1	
2	01100-06012		BOLT	ﾎﾞﾙﾄ	2	
3	01400-00006		NUT	ﾅｯﾄ	2	
4	02010-00006		WASHER	ﾜｯｼｬ	2	
5	27455-22011		BOLT,CAP-SQUARE-NECK	ﾎﾞﾙﾄ	1	
6	01400-00012		NUT	ﾅｯﾄ	1	
7	237A5-22101		WIRE,ACCEL	ﾜｲﾔ	1	
8	27042-42312		BAND,CABLE	ﾊﾞﾝﾄﾞ	2	
9	02262-06015		PIN,CLEVIS	ﾋﾟﾝ	1	
10	02000-00006		WASHER	ﾜｯｼｬ	1	
11	02200-16015		PIN,COTTER	ﾋﾟﾝ	1	
12	239A5-20402		BRACKET,ACCEL-LINK	ﾌﾞﾗｹｯﾄ	1	
13	02000-00016		WASHER	ﾜｯｼｬ	1	
14	239A5-22253		SPRING	ｽﾌﾟﾘﾝｸﾞ	1	
15	02200-04025		PIN,COTTER	ﾋﾟﾝ	1	
A1	239A5-20302		LINK-ASSY,ACCEL	ｱｸｾﾙﾘﾝｸｱｯｾﾝ	1	INC.16-20
16	NO PART NO.	#	LINK,ACCEL	ﾘﾝｸ	1	
17	214A7-42071		BUSHING	ﾌﾞｯｼﾝｸﾞ	2	
18	214A5-22001		ROLLER	ﾛｰﾗ	1	
19	02200-16010		PIN,COTTER	ﾋﾟﾝ	1	
20	02000-00006		WASHER	ﾜｯｼｬ	1	
21	01183-08016		BOLT	ﾎﾞﾙﾄ	2	
22	239A5-22151		WASHER	ﾜｯｼｬ	1	

FIG.137 ACCEL PEDAL (DIESEL)

(F5025220) アクセルペダル

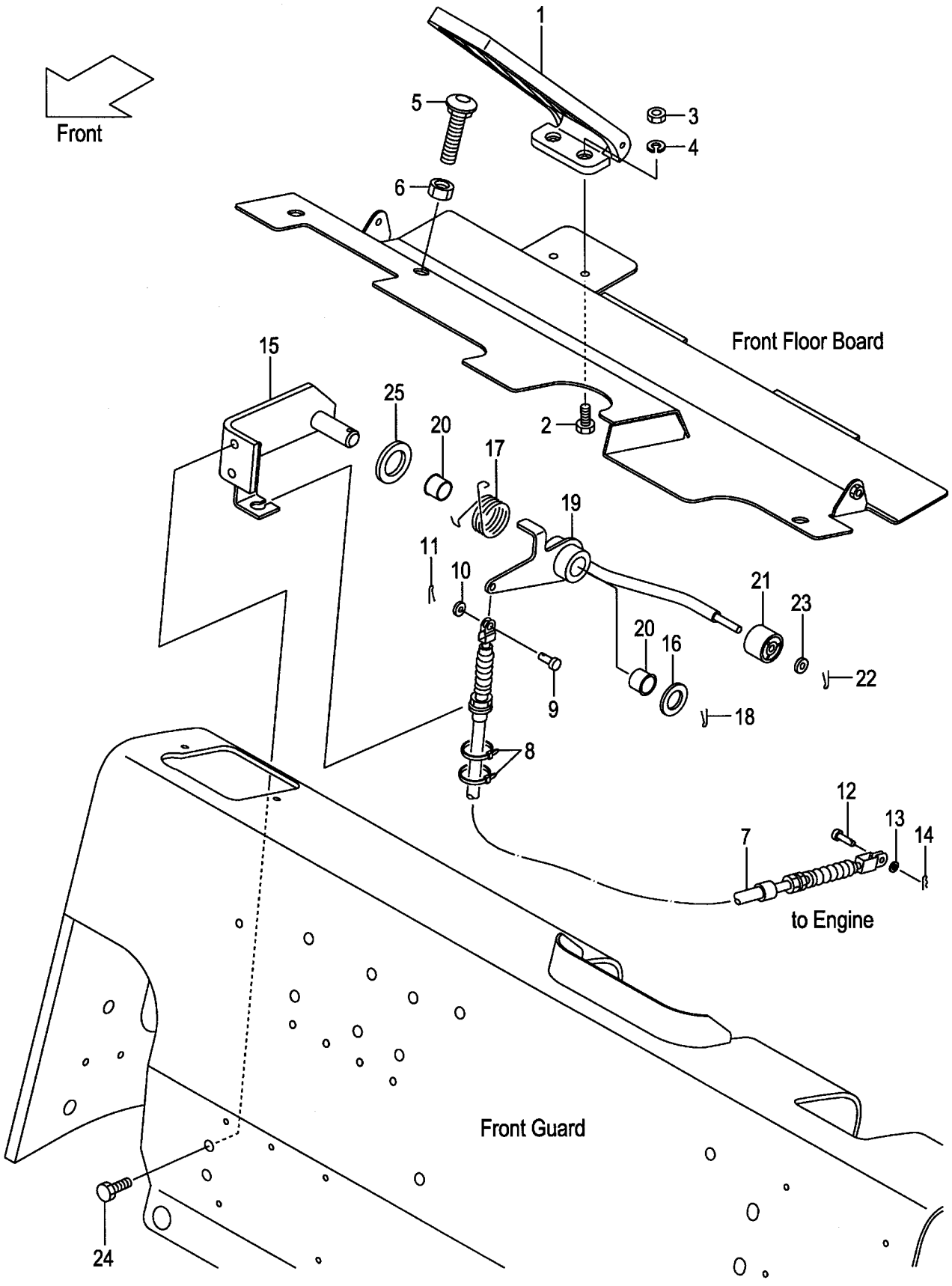

A:FD20C17 FD20T17 FD25C17 FD25T17
B:FD20C6 FD20T6 FD25C6 FD25T6 FD20W6 FD25W6

Item No	Part No.	Mark	Description		Req'd	Remarks : Serial No.
1	214A5-22051		PEDAL,ACCEL	ﾍﾟﾀﾞﾙ	1	
2	01100-06012		BOLT	ﾎﾞﾙﾄ	2	
3	01400-00006		NUT	ﾅｯﾄ	2	
4	02010-00006		WASHER	ﾜｯｼｬ	2	
5	216G5-22101		BOLT,CAP-SQUARE-NECK	ﾎﾞﾙﾄ	1	
6	01400-00012		NUT	ﾅｯﾄ	1	
7	238F5-22101		WIRE,ACCEL	ﾜｲﾔ	1	
8	27042-42312		BAND,CABLE	ﾊﾞﾝﾄﾞ	2	
9	02262-06015		PIN,CLEVIS	ﾋﾟﾝ	1	
10	02000-00006		WASHER	ﾜｯｼｬ	1	
11	02200-16015		PIN,COTTER	ﾋﾟﾝ	1	
12	22717-40061		PIN,CLEVIS	ﾋﾟﾝ	1	
13	02000-00005		WASHER	ﾜｯｼｬ	1	
14	216G7-42161		PIN,SNAP	ﾋﾟﾝ	1	
15	239A5-20402		BRACKET,ACCEL-LINK	ﾌﾞﾗｹｯﾄ	1	
16	02000-00016		WASHER	ﾜｯｼｬ	1	
17	239A5-22253		SPRING	ｽﾌﾟﾘﾝｸﾞ	1	
18	02200-04025		PIN,COTTER	ﾋﾟﾝ	1	
A1	239A5-20302		LINK-ASSY,ACCEL	ｱｸｾﾙﾘﾝｸｱｯｾﾝ	1	INC.19-23
19	NO PART NO.	#	LINK,ACCEL	ﾘﾝｸ	1	
20	214A7-42071		BUSHING	ﾌﾞｯｼﾝｸﾞ	2	
21	214A5-22001		ROLLER	ﾛｰﾗ	1	
22	02200-16010		PIN,COTTER	ﾋﾟﾝ	1	
23	02000-00006		WASHER	ﾜｯｼｬ	1	
24	01183-08016		BOLT	ﾎﾞﾙﾄ	2	
25	239A5-22151		WASHER	ﾜｯｼｬ	1	

FIG.138 FOOT PEDAL (CLUTCH)

(F5025410) ﾌｯﾄﾍﾟﾀﾞﾙ

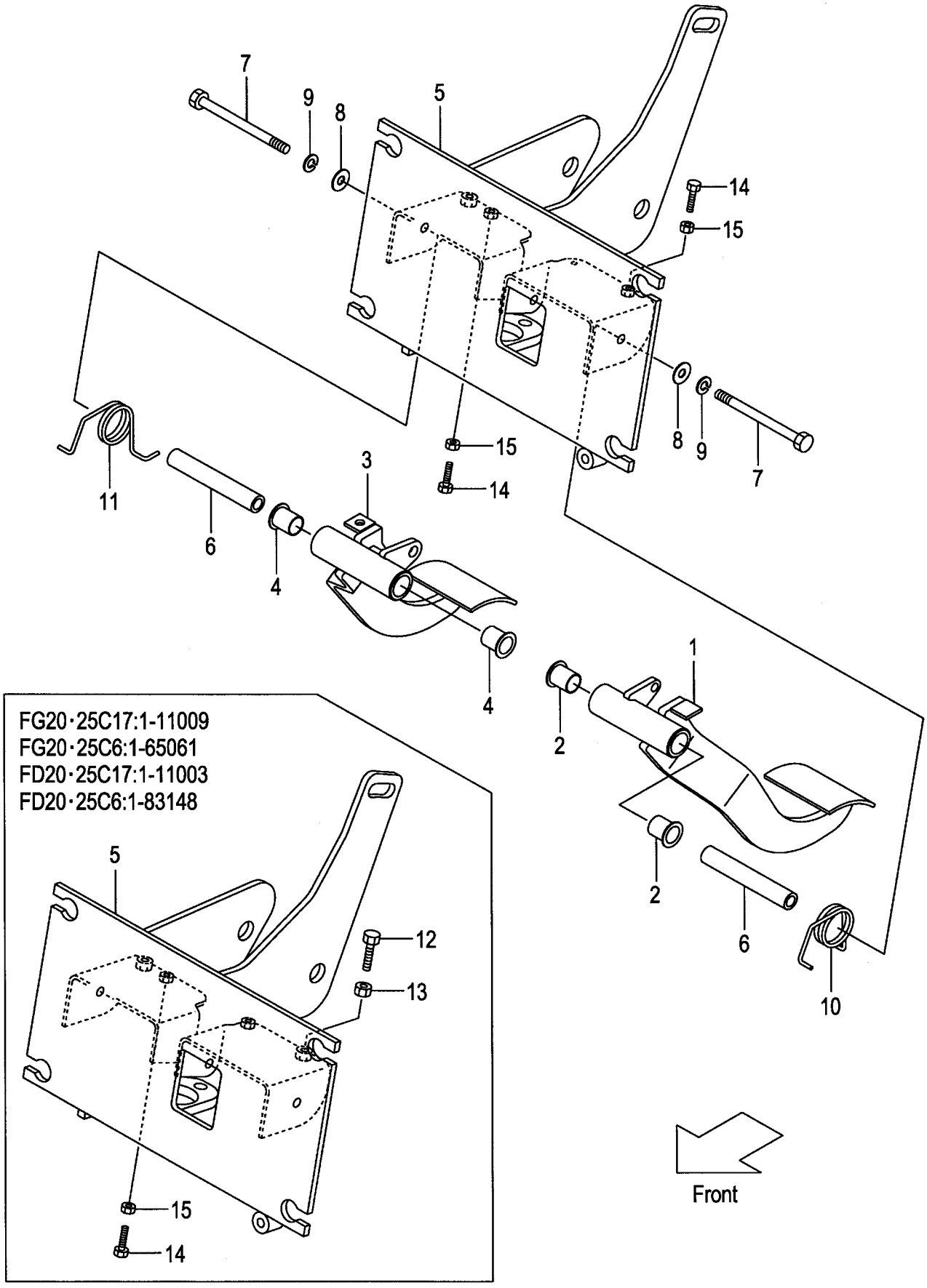

A:FG20C17 FG25C17:1-11027 C:FD20C17 FD25C17:1-11011
B:FG20C6 FG25C6:1-65658 D:FD20C6 FD25C6:1-84368

Item No	Part No.	Mark	Description		Req'd	Remarks : Serial No.
A1	239A5-40071		PEDAL-ASSY,CLUTCH	ｸﾗｯﾁﾍﾟﾀﾞﾙｱｯｾﾝ	1	INC.1,2
1	NO PART NO.	#	PEDAL,CLUTCH	ﾍﾟﾀﾞﾙ	1	
2	239B5-42221		BUSHING	ﾌﾞｯｼﾝｸﾞ	2	
A2	239A5-40061		PEDAL-ASSY,BRAKE	ﾌﾞﾚｰｷﾍﾟﾀﾞﾙｱｯｾﾝ	1	INC.3,4
3	NO PART NO.	#	PEDAL,BRAKE	ﾍﾟﾀﾞﾙ	1	
4	239B5-42221		BUSHING	ﾌﾞｯｼﾝｸﾞ	2	
5	239A5-40201		BRACKET,PEDAL	ﾌﾞﾗｹｯﾄ	1	
6	239B5-42231		SPACER	ｽﾍﾟｰｻ	2	
7	01103-10120		BOLT	ﾎﾞﾙﾄ	2	
8	02002-00010		WASHER	ﾜｯｼｬ	2	
9	02011-00010		WASHER	ﾜｯｼｬ	2	
10	239B5-42201		SPRING	ｽﾌﾟﾘﾝｸﾞ	1	
11	239B5-42211		SPRING	ｽﾌﾟﾘﾝｸﾞ	1	
12	01120-10035		BOLT	ﾎﾞﾙﾄ	1	A:1-11009 B:1-65061 C:1-11003 D:1-83148
13	01402-00010		NUT	ﾅｯﾄ	1	A:1-11009 B:1-65061 C:1-11003 D:1-83148
14	01120-08035		BOLT	ﾎﾞﾙﾄ	1	A:1-11009 B:1-65061 C:1-11003 D:1-83148
-	01120-08035		BOLT	ﾎﾞﾙﾄ	2	A:11010- B:65062- C:11004- D:83149-
15	01402-00008		NUT	ﾅｯﾄ	1	A:1-11009 B:1-65061 C:1-11003 D:1-83148
-	01402-00008		NUT	ﾅｯﾄ	2	A:11010- B:65062- C:11004- D:83149-

FIG.138A FOOT PEDAL (CLUTCH)

(F5025411) ﾌｯﾄﾍﾟﾀﾞﾙ

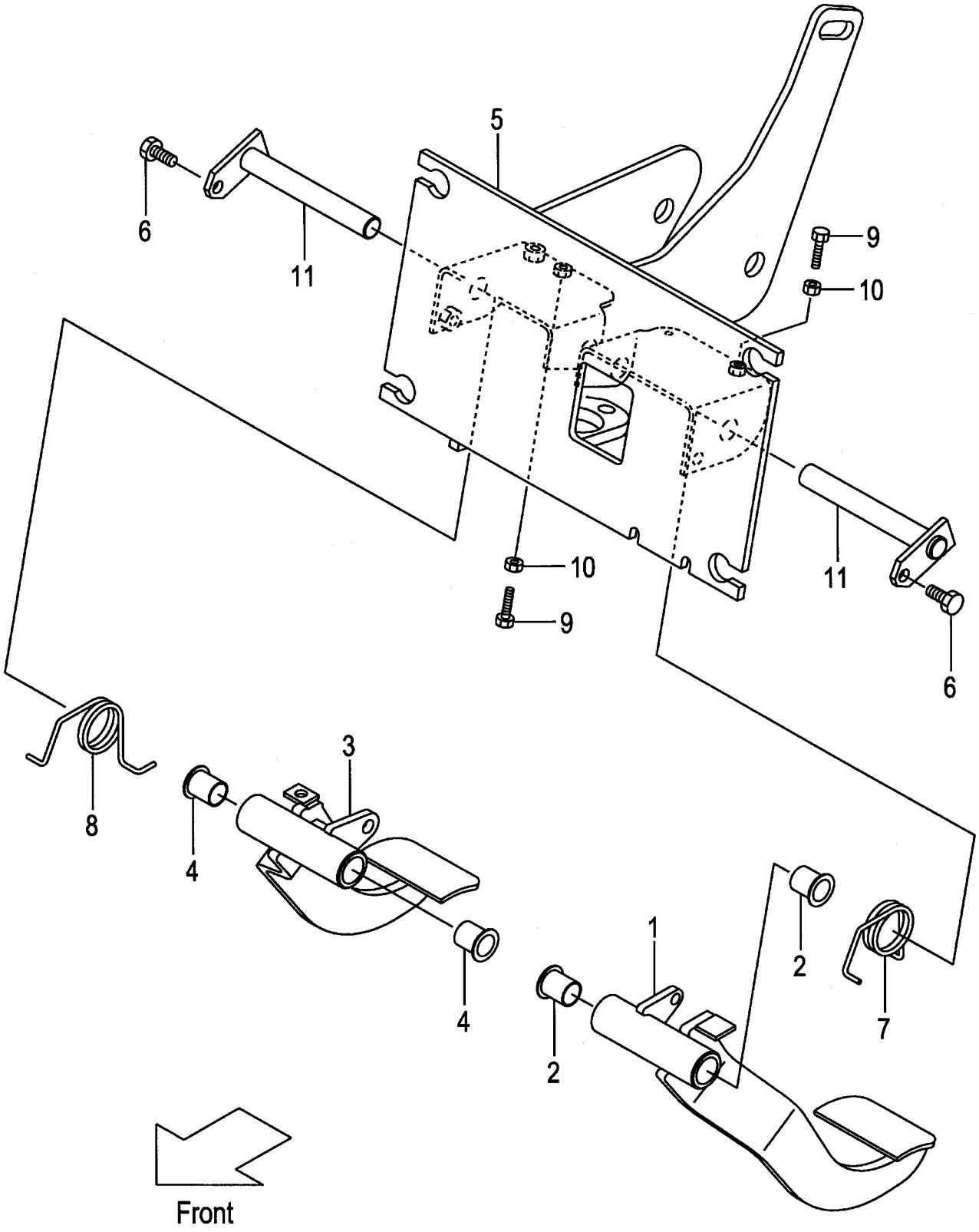

A:FG20C17 FG25C17:11028- C:FD20C17 FD25C17:11012-
B:FG20C6 FG25C6:65659- D:FD20C6 FD25C6:84369-

Item No	Part No.	Mark	Description		Req'd	Remarks : Serial No.
A1	238F5-40071		PEDAL-ASSY,CLUTCH	ｸﾗｯﾁﾍﾟﾀﾞﾙｱｯｾﾝ	1	INC.1,2
1	NO PART NO.	#	PEDAL,CLUTCH	ﾍﾟﾀﾞﾙ	1	
2	239B5-42221		BUSHING	ﾌﾞｯｼﾝｸﾞ	2	
A2	238F5-40061		PEDAL-ASSY,BRAKE	ﾌﾞﾚｰｷﾍﾟﾀﾞﾙｱｯｾﾝ	1	INC.3,4
3	NO PART NO.	#	PEDAL,BRAKE	ﾍﾟﾀﾞﾙ	1	
4	239B5-42221		BUSHING	ﾌﾞｯｼﾝｸﾞ	2	
5	238F5-40201		BRACKET,PEDAL	ﾌﾞﾗｹｯﾄ	1	A:11028-11039
						B:65659-66056
						C:11012-11018
						D:84369-84952
-	238F5-40202		BRACKET,PEDAL	ﾌﾞﾗｹｯﾄ	1	A:11040-
						B:66057-
						C:11019-
						D:84953-
6	01186-08016		BOLT	ﾎﾞﾙﾄ	2	
7	239B5-42201		SPRING	ｽﾌﾟﾘﾝｸﾞ	1	
8	239B5-42211		SPRING	ｽﾌﾟﾘﾝｸﾞ	1	
9	01120-08035		BOLT	ﾎﾞﾙﾄ	2	
10	01402-00008		NUT	ﾅｯﾄ	2	
11	238F5-40501		SHAFT	ｼｬﾌﾄ	2	

FIG.139 FOOT PEDAL (CLUTCH):[PC][EXB/PC/OBT]

(F5025450) ﾌｯﾄﾍﾟﾀﾞﾙ

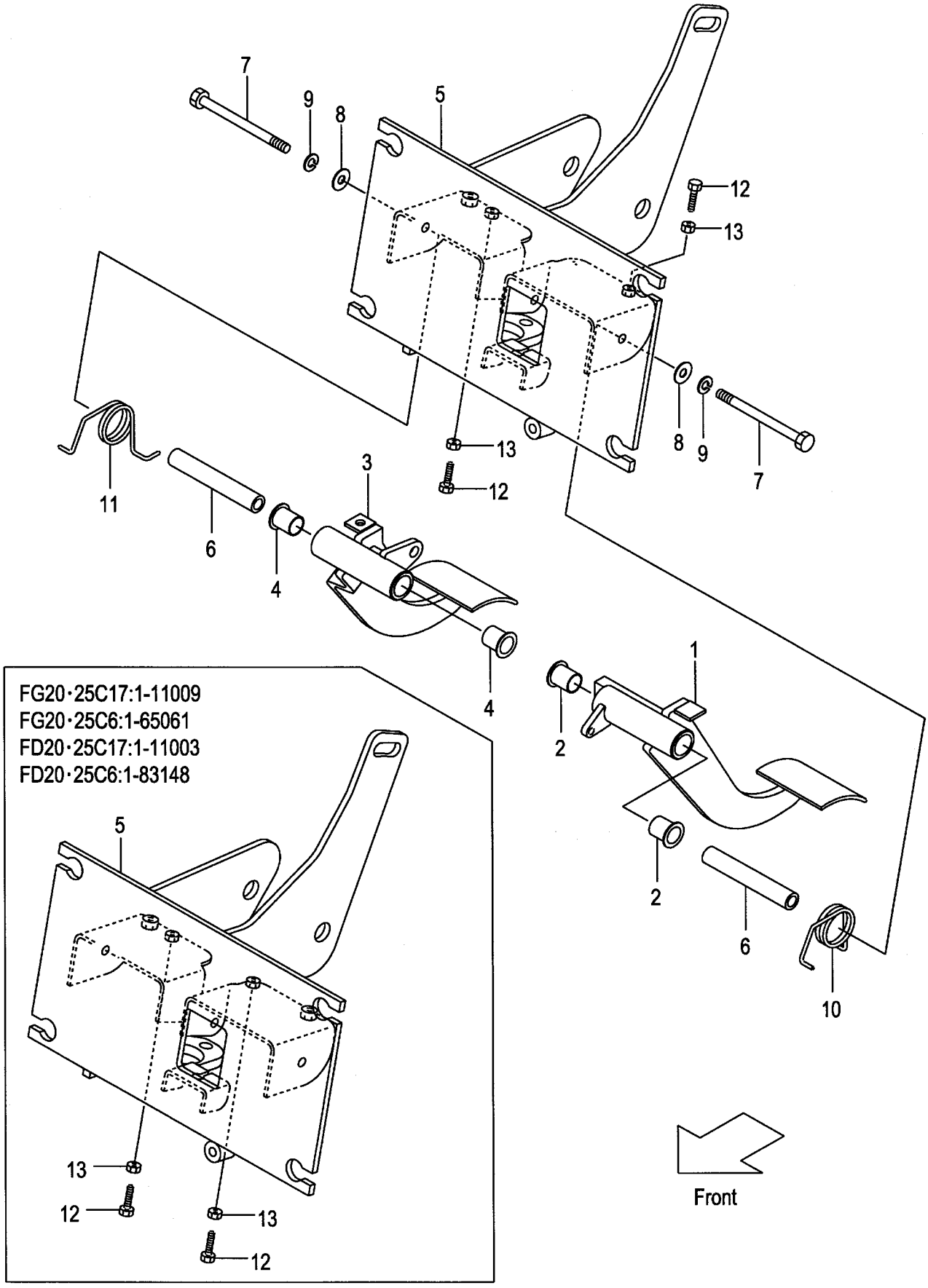

A:FG20C17 FG25C17:1-11027 C:FD20C17 FD25C17:1-11011
B:FG20C6 FG25C6:1-65658 D:FD20C6 FD25C6:1-84368

Item No	Part No.	Mark	Description		Req'd	Remarks : Serial No.
A1	239H5-40411		PEDAL-ASSY,INCHING	ｲﾝﾁﾝｸﾞﾍﾟﾀﾞﾙｱｯｾﾝ	1	[PC] INC.1,2
-	239H5-40411		PEDAL-ASSY,INCHING	ｲﾝﾁﾝｸﾞﾍﾟﾀﾞﾙｱｯｾﾝ	1	B,D
						[EXB/PC/OBT] INC.1,2
1	NO PART NO.	#	PEDAL,INCHING	ﾍﾟﾀﾞﾙ	1	[PC]
-	NO PART NO.	#	PEDAL,INCHING	ﾍﾟﾀﾞﾙ	1	B,D
						[EXB/PC/OBT]
2	239B5-42221		BUSHING	ﾌﾞｯｼﾝｸﾞ	2	[PC]
-	239B5-42221		BUSHING	ﾌﾞｯｼﾝｸﾞ	2	B,D
						[EXB/PC/OBT]
A2	239A5-40061		PEDAL-ASSY,BRAKE	ﾌﾞﾚｰｷﾍﾟﾀﾞﾙｱｯｾﾝ	1	[PC] INC.3,4
-	239A5-40061		PEDAL-ASSY,BRAKE	ﾌﾞﾚｰｷﾍﾟﾀﾞﾙｱｯｾﾝ	1	B,D
						[EXB/PC/OBT] INC.3,4
3	NO PART NO.	#	PEDAL,BRAKE	ﾍﾟﾀﾞﾙ	1	[PC]
-	NO PART NO.	#	PEDAL,BRAKE	ﾍﾟﾀﾞﾙ	1	B,D
						[EXB/PC/OBT]
4	239B5-42221		BUSHING	ﾌﾞｯｼﾝｸﾞ	2	[PC]
-	239B5-42221		BUSHING	ﾌﾞｯｼﾝｸﾞ	2	B,D
						[EXB/PC/OBT]
5	239H5-40221		BRACKET,PEDAL	ﾌﾞﾗｹｯﾄ	1	[PC]
-	239H5-40221		BRACKET,PEDAL	ﾌﾞﾗｹｯﾄ	1	B,D
						[EXB/PC/OBT]
6	239B5-42231		SPACER	ｽﾍﾟｰｻ	2	[PC]
-	239B5-42231		SPACER	ｽﾍﾟｰｻ	2	B,D
						[EXB/PC/OBT]
7	01103-10120		BOLT	ﾎﾞﾙﾄ	2	[PC]
-	01103-10120		BOLT	ﾎﾞﾙﾄ	2	B,D
						[EXB/PC/OBT]
8	02002-00010		WASHER	ﾜｯｼｬ	2	[PC]
-	02002-00010		WASHER	ﾜｯｼｬ	2	B,D
						[EXB/PC/OBT]
9	02011-00010		WASHER	ﾜｯｼｬ	2	[PC]
-	02011-00010		WASHER	ﾜｯｼｬ	2	B,D
						[EXB/PC/OBT]
10	239B5-42201		SPRING	ｽﾌﾟﾘﾝｸﾞ	1	[PC]
-	239B5-42201		SPRING	ｽﾌﾟﾘﾝｸﾞ	1	B,D
						[EXB/PC/OBT]
11	239B5-42211		SPRING	ｽﾌﾟﾘﾝｸﾞ	1	[PC]
-	239B5-42211		SPRING	ｽﾌﾟﾘﾝｸﾞ	1	B,D
						[EXB/PC/OBT]
12	01120-08035		BOLT	ﾎﾞﾙﾄ	2	[PC]
-	01120-08035		BOLT	ﾎﾞﾙﾄ	2	B,D
						[EXB/PC/OBT]
13	01402-00008		NUT	ﾅｯﾄ	2	[PC]
-	01402-00008		NUT	ﾅｯﾄ	2	B,D
						[EXB/PC/OBT]

FIG.139A FOOT PEDAL (CLUTCH):[PC][EXB/PC/OBT]

(F5025451) ﾌｯﾄﾍﾟﾀﾞﾙ

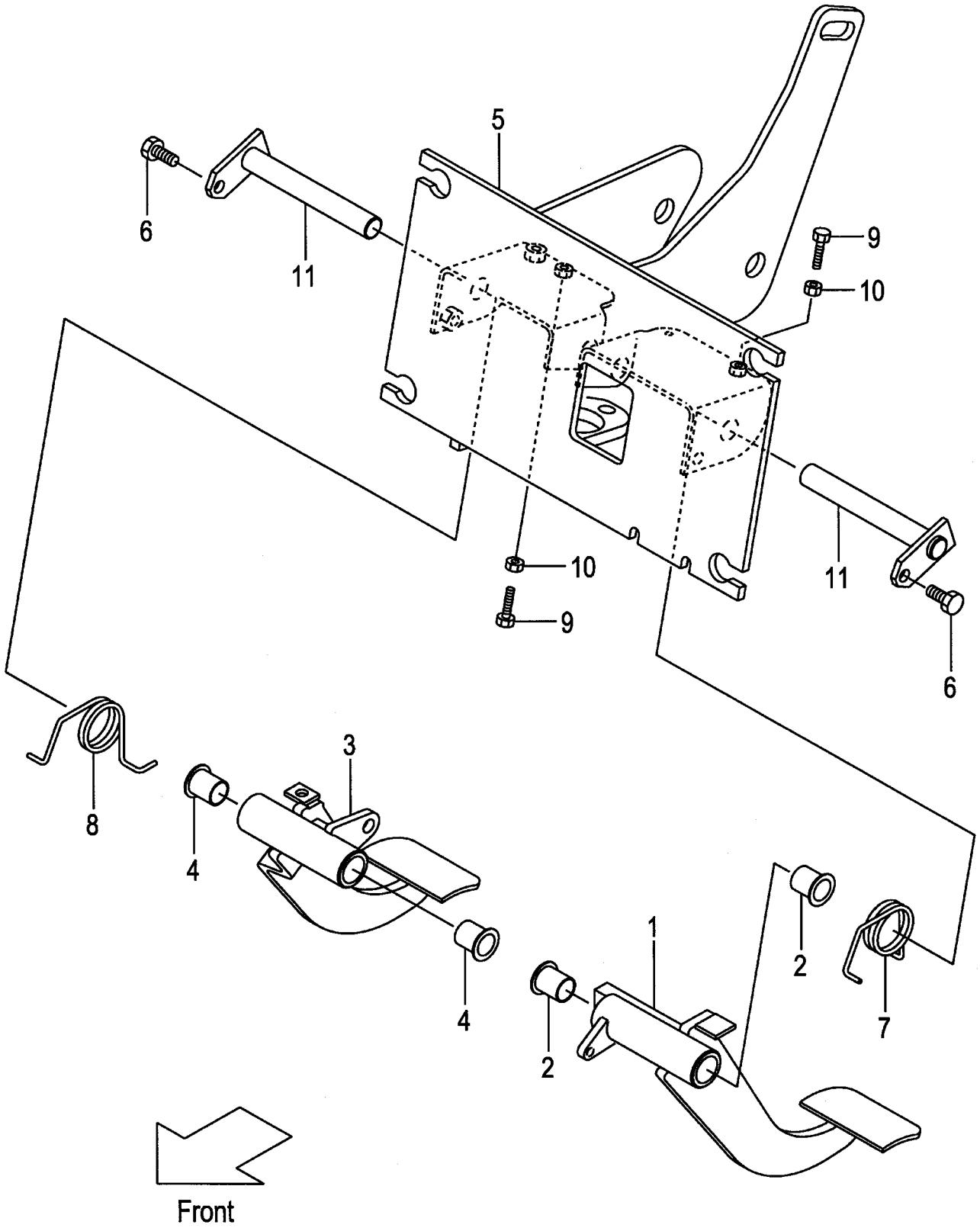

A:FG20C17 FG25C17:11028- C:FD20C17 FD25C17:11012-
B:FG20C6 FG25C6:65659- D:FD20C6 FD25C6:84369-

Item No	Part No.	Mark	Description		Req'd	Remarks : Serial No.
A1	239H5-40411		PEDAL-ASSY,INCHING	ｲﾝﾁﾝｸﾞﾍﾟﾀﾞﾙｱｯｾﾝ	1	[PC] INC.1,2
-	239H5-40411		PEDAL-ASSY,INCHING	ｲﾝﾁﾝｸﾞﾍﾟﾀﾞﾙｱｯｾﾝ	1	B,D [EXB/PC/OBT] INC.1,2
1	NO PART NO.	#	PEDAL,INCHING	ﾍﾟﾀﾞﾙ	1	[PC]
-	NO PART NO.	#	PEDAL,INCHING	ﾍﾟﾀﾞﾙ	1	B,D [EXB/PC/OBT]
2	239B5-42221		BUSHING	ﾌﾞｯｼﾝｸﾞ	2	[PC]
-	239B5-42221		BUSHING	ﾌﾞｯｼﾝｸﾞ	2	B,D [EXB/PC/OBT]
A2	238F5-40061		PEDAL-ASSY,BRAKE	ﾌﾞﾚｰｷﾍﾟﾀﾞﾙｱｯｾﾝ	1	[PC] INC.3,4
-	238F5-40061		PEDAL-ASSY,BRAKE	ﾌﾞﾚｰｷﾍﾟﾀﾞﾙｱｯｾﾝ	1	B,D [EXB/PC/OBT] INC.3,4
3	NO PART NO.	#	PEDAL,BRAKE	ﾍﾟﾀﾞﾙ	1	[PC]
-	NO PART NO.	#	PEDAL,BRAKE	ﾍﾟﾀﾞﾙ	1	B,D [EXB/PC/OBT]
4	239B5-42221		BUSHING	ﾌﾞｯｼﾝｸﾞ	2	[PC]
-	239B5-42221		BUSHING	ﾌﾞｯｼﾝｸﾞ	2	B,D [EXB/PC/OBT]
5	238S5-40201		BRACKET,PEDAL	ﾌﾞﾗｹｯﾄ	1	A:11028-11039 B:65659-66056 C:11012-11018 D:84369-84952 [PC]
-	238S5-40202		BRACKET,PEDAL	ﾌﾞﾗｹｯﾄ	1	A:11040- B:66057- C:11019- D:84953- [PC]
-	238S5-40201		BRACKET,PEDAL	ﾌﾞﾗｹｯﾄ	1	B:65659-66056 D:84369-84952 [EXB/PC/OBT]
-	238S5-40202		BRACKET,PEDAL	ﾌﾞﾗｹｯﾄ	1	B:66057- D:84953- [EXB/PC/OBT]
6	01186-08016		BOLT	ﾎﾞﾙﾄ	2	[PC]
-	01186-08016		BOLT	ﾎﾞﾙﾄ	2	B,D [EXB/PC/OBT]
7	239B5-42201		SPRING	ｽﾌﾟﾘﾝｸﾞ	1	[PC]
-	239B5-42201		SPRING	ｽﾌﾟﾘﾝｸﾞ	1	B,D [EXB/PC/OBT]
8	239B5-42211		SPRING	ｽﾌﾟﾘﾝｸﾞ	1	[PC]
-	239B5-42211		SPRING	ｽﾌﾟﾘﾝｸﾞ	1	B,D [EXB/PC/OBT]
9	01120-08035		BOLT	ﾎﾞﾙﾄ	2	[PC]
-	01120-08035		BOLT	ﾎﾞﾙﾄ	2	B,D [EXB/PC/OBT]
10	01402-00008		NUT	ﾅｯﾄ	2	[PC]
-	01402-00008		NUT	ﾅｯﾄ	2	B,D [EXB/PC/OBT]
11	238F5-40501		SHAFT	ｼｬﾌﾄ	2	[PC]

FIG.139A FOOT PEDAL (CLUTCH):[PC][EXB/PC/OBT]

(F5025451) ﾌｯﾄﾍﾟﾀﾞﾙ

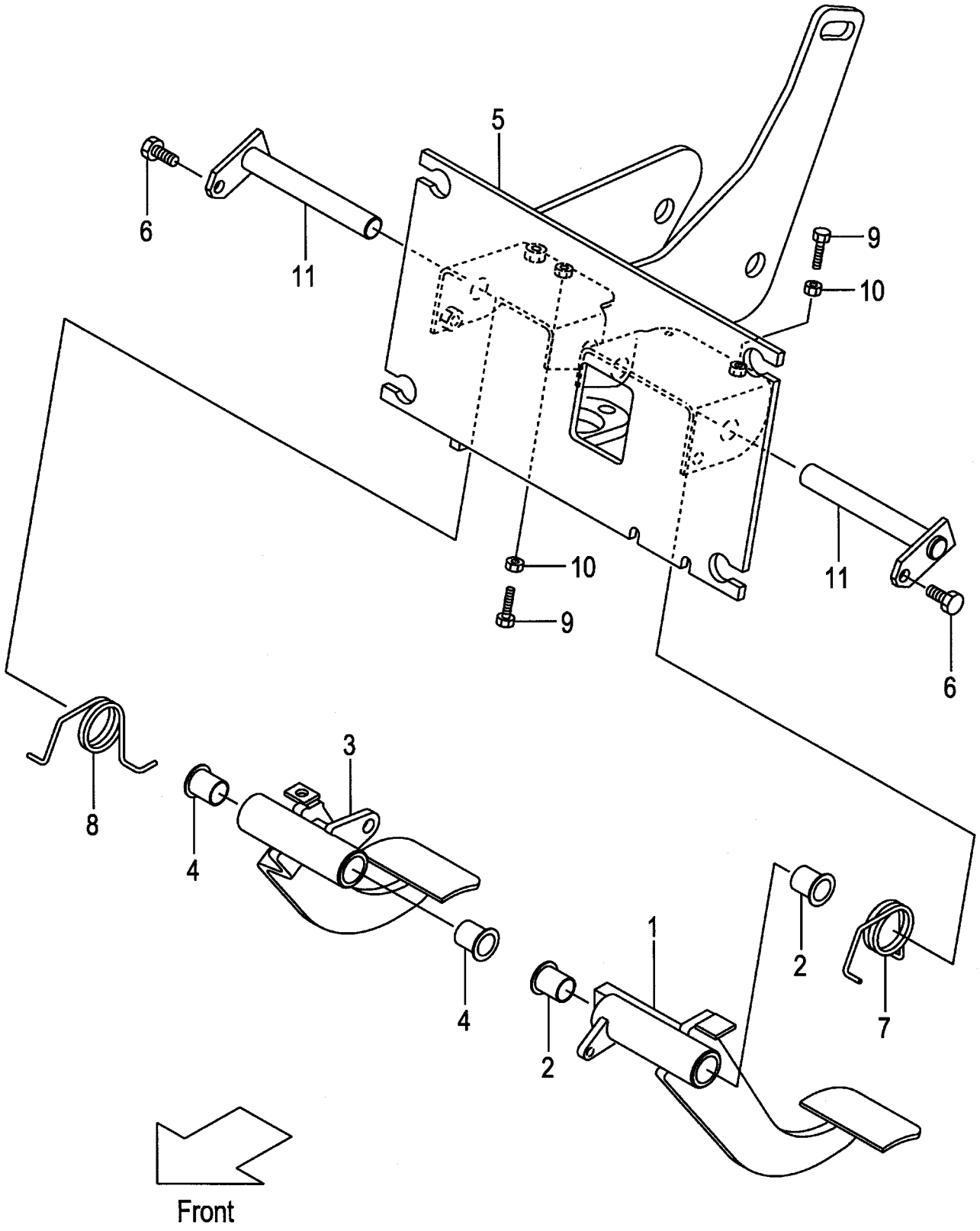

A:FG20C17 FG25C17:11028- C:FD20C17 FD25C17:11012-
B:FG20C6 FG25C6:65659- D:FD20C6 FD25C6:84369-

Item No	Part No.	Mark	Description	Req'd	Remarks : Serial No.
-	238F5-40501		SHAFT シャフト	2	B,D [EXB/PC/OBT]

FIG.140 FOOT PEDAL (TOR-CON)

(F50254A0) ﾌｯﾄﾍﾟﾀﾞﾙ

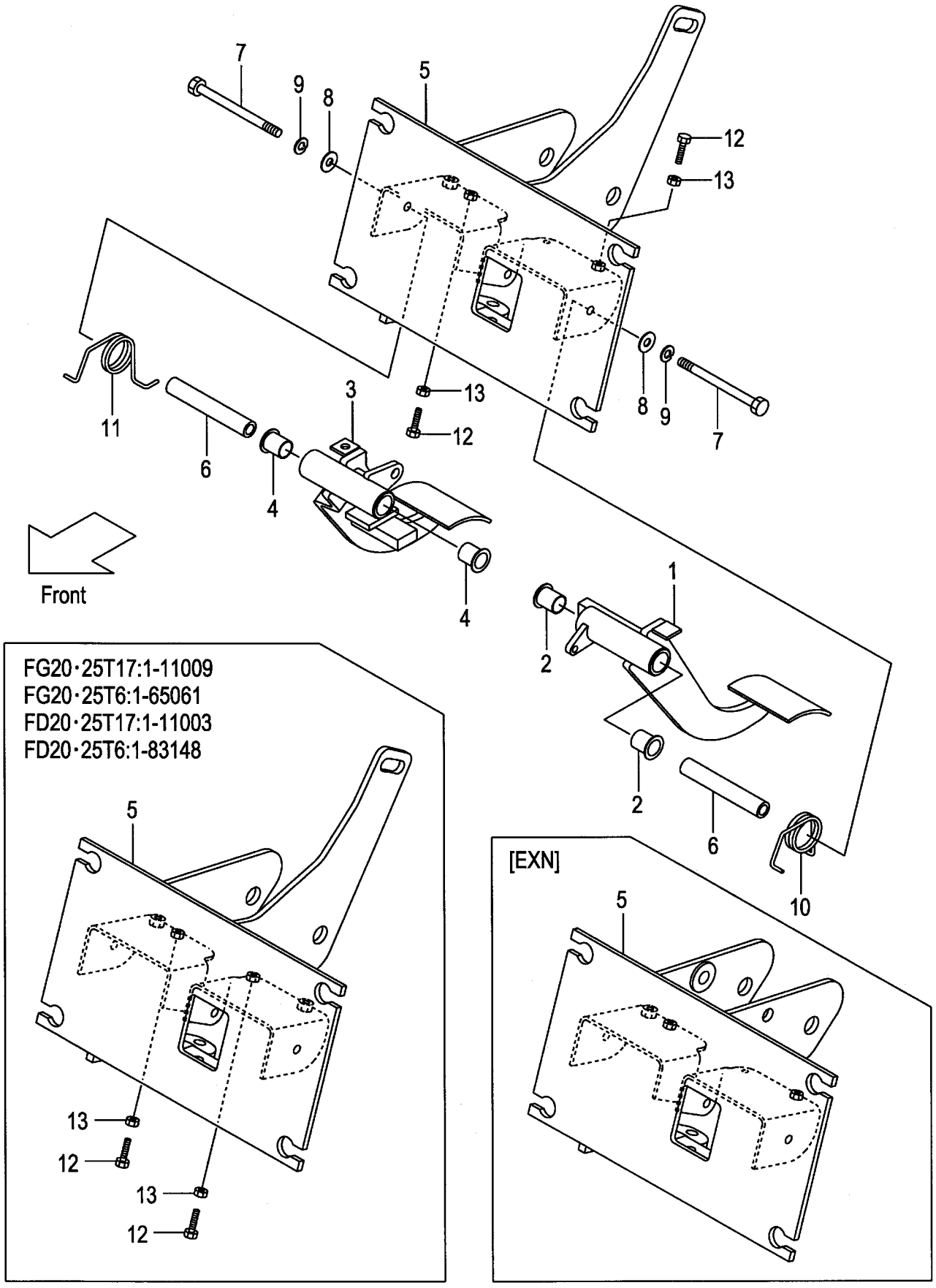

A:FG20T17 FG25T17:1-11027 C:FD20T17 FD25T17:1-11011
B:FG20T6 FG25T6:1-65658 D:FD20T6 FD25T6:1-84368

Item No	Part No.	Mark	Description		Req'd	Remarks : Serial No.
A1	239B5-40031		PEDAL-ASSY,INCHING	ｲﾝﾁﾝｸﾞﾍﾟﾀﾞﾙｱｯｾﾝ	1	INC.1,2
1	NO PART NO.	#	PEDAL,INCHING	ﾍﾟﾀﾞﾙ	1	
2	239B5-42221		BUSHING	ﾌﾞｯｼﾝｸﾞ	2	
A2	239B5-40021		PEDAL-ASSY,BRAKE	ﾌﾞﾚｰｷﾍﾟﾀﾞﾙｱｯｾﾝ	1	INC.3,4
3	NO PART NO.	#	PEDAL,BRAKE	ﾍﾟﾀﾞﾙ	1	
4	239B5-42221		BUSHING	ﾌﾞｯｼﾝｸﾞ	2	
5	239B5-40201		BRACKET,PEDAL	ﾌﾞﾗｹｯﾄ	1	
-	539B2-60201		BRACKET,PEDAL	ﾌﾞﾗｹｯﾄ	1	B,D [EXN]
6	239B5-42231		SPACER	ｽﾍﾟｰｻ	2	
7	01103-10120		BOLT	ﾎﾞﾙﾄ	2	
8	02002-00010		WASHER	ﾜｯｼｬ	2	
9	02011-00010		WASHER	ﾜｯｼｬ	2	
10	239B5-42201		SPRING	ｽﾌﾟﾘﾝｸﾞ	1	
11	239B5-42211		SPRING	ｽﾌﾟﾘﾝｸﾞ	1	
12	01120-08035		BOLT	ﾎﾞﾙﾄ	2	
13	01402-00008		NUT	ﾅｯﾄ	2	

FIG.140A FOOT PEDAL (TOR-CON)

(F50254A1) ﾌｯﾄﾍﾟﾀﾞﾙ

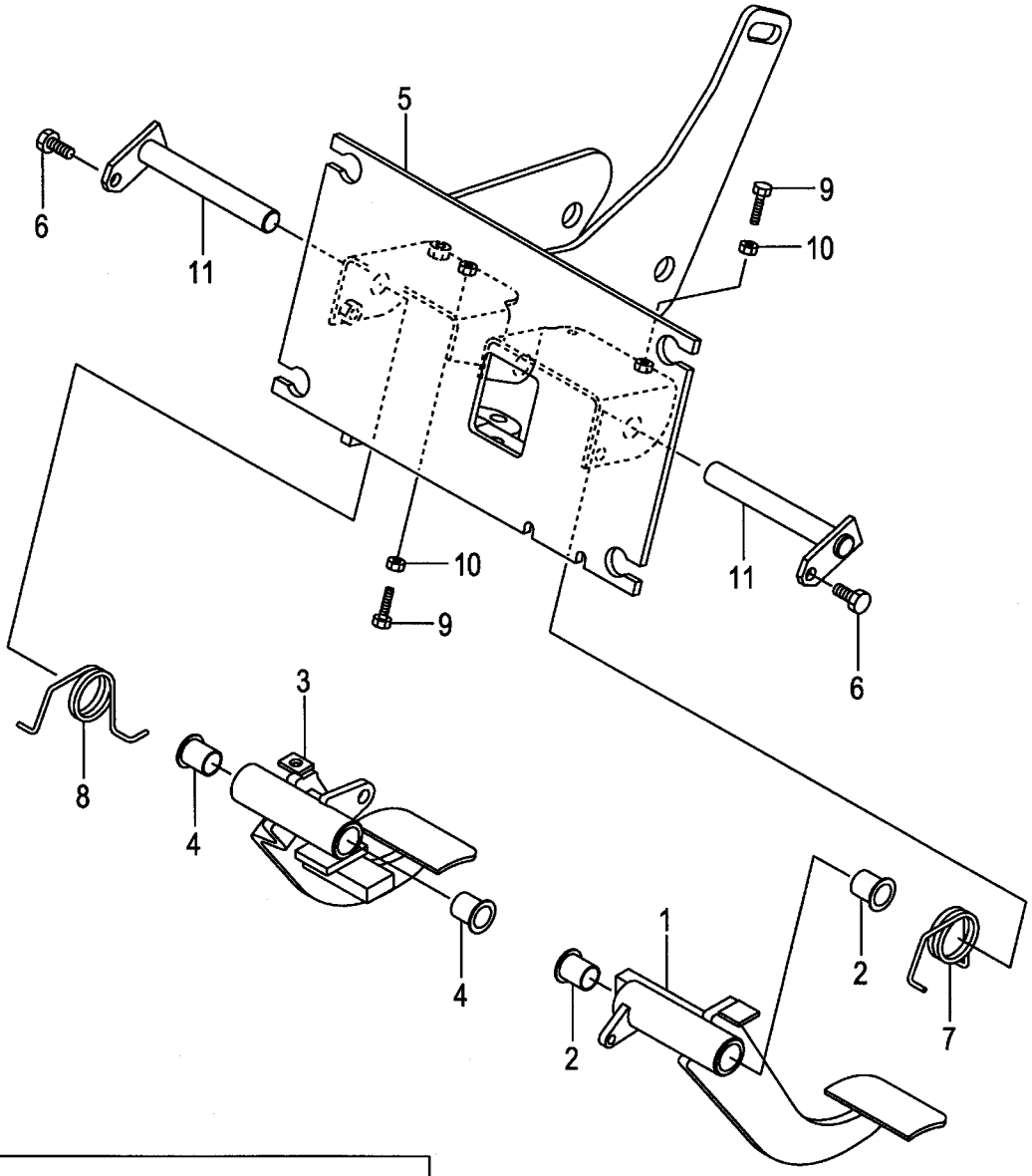

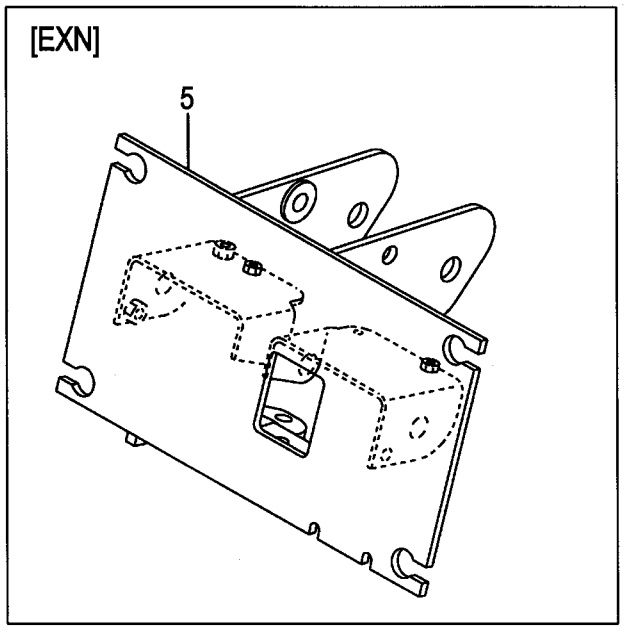

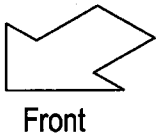

A:FG20T17 FG25T17:11028- C:FD20T17 FD25T17:11012-
B:FG20T6 FG25T6:65659- D:FD20T6 FD25T6:84369-

Item No	Part No.	Mark	Description		Req'd	Remarks : Serial No.
A1	238G5-40031		PEDAL-ASSY,INCHING	ｲﾝﾁﾝｸﾞﾍﾟﾀﾞﾙｱｯｾﾝ	1	INC.1,2
1	NO PART NO.	#	PEDAL,INCHING	ﾍﾟﾀﾞﾙ	1	
2	239B5-42221		BUSHING	ﾌﾞｯｼﾝｸﾞ	2	
A2	238G5-40021		PEDAL-ASSY,BRAKE	ﾌﾞﾚｰｷﾍﾟﾀﾞﾙｱｯｾﾝ	1	INC.3,4
3	NO PART NO.	#	PEDAL,BRAKE	ﾍﾟﾀﾞﾙ	1	
4	239B5-42221		BUSHING	ﾌﾞｯｼﾝｸﾞ	2	
5	238G5-40201		BRACKET,PEDAL	ﾌﾞﾗｹｯﾄ	1	A:11028-11039 B:65659-66056 C:11012-11018 D:84369-84952
-	238G5-40202		BRACKET,PEDAL	ﾌﾞﾗｹｯﾄ	1	A:11040- B:66057- C:11019- D:84953-
-	538G2-60201		BRACKET,PEDAL	ﾌﾞﾗｹｯﾄ	1	B:65659-66056 D:84369-84952 [EXN]
-	538G2-60202		BRACKET,PEDAL	ﾌﾞﾗｹｯﾄ	1	B:66057- D:84953- [EXN]
6	01186-08016		BOLT	ﾎﾞﾙﾄ	2	
7	239B5-42201		SPRING	ｽﾌﾟﾘﾝｸﾞ	1	
8	239B5-42211		SPRING	ｽﾌﾟﾘﾝｸﾞ	1	
9	01120-08035		BOLT	ﾎﾞﾙﾄ	2	
10	01402-00008		NUT	ﾅｯﾄ	2	
11	238F5-40501		SHAFT	ｼｬﾌﾄ	2	

FIG.141 FOOT PEDAL (OIL CLUTCH)

(F50254C0) ﾌｯﾄﾍﾟﾀﾞﾙ

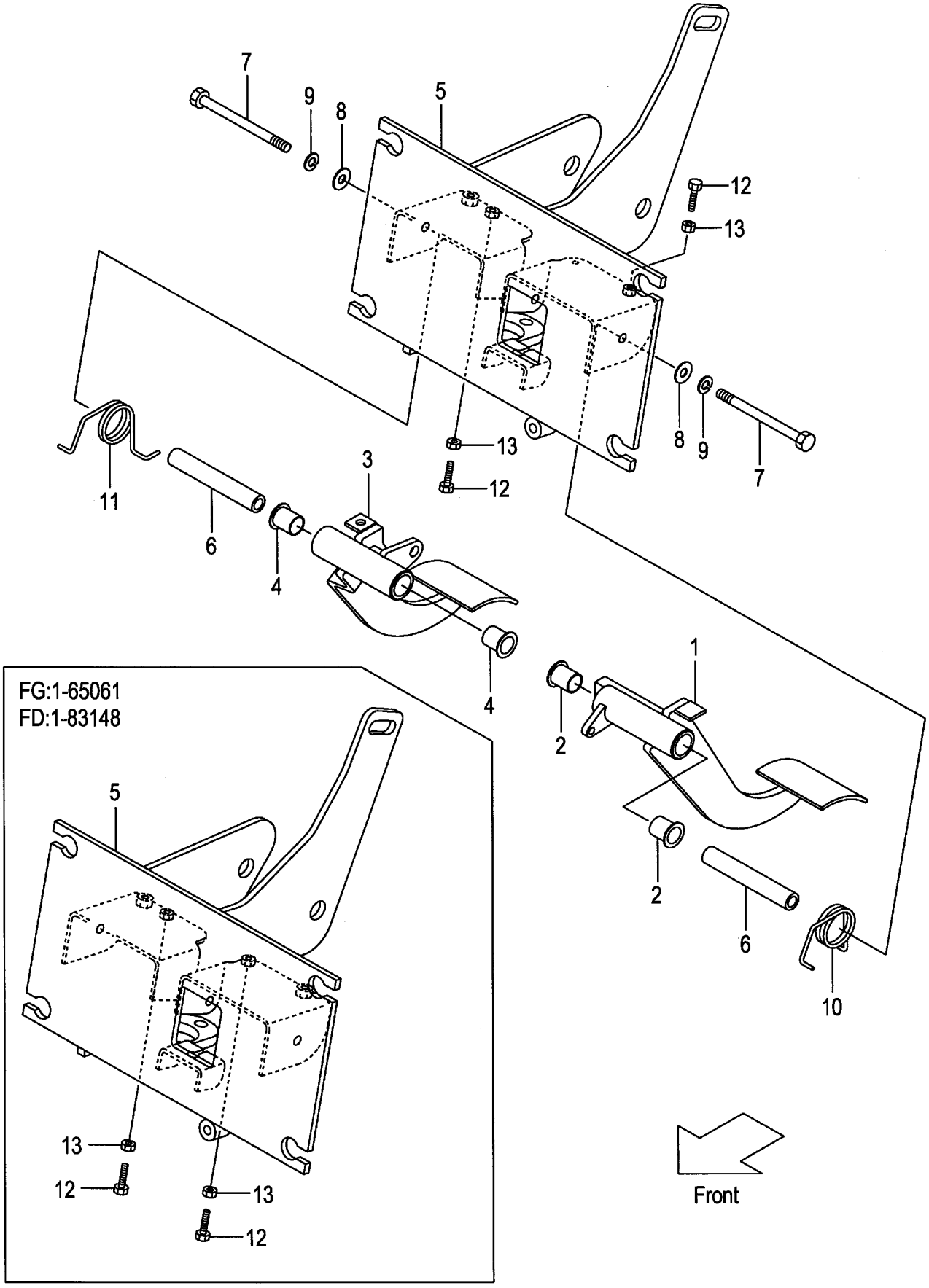

A:FG20W6 FG25W6:1-65658
B:FD20W6 FD25W6:1-84368

Item No	Part No.	Mark	Description		Req'd	Remarks : Serial No.
A1	239H5-40411		PEDAL-ASSY,INCHING	ｲﾝﾁﾝｸﾞﾍﾟﾀﾞﾙｱｯｾﾝ	1	INC.1,2
1	NO PART NO.	#	PEDAL,INCHING	ﾍﾟﾀﾞﾙ	1	
2	239B5-42221		BUSHING	ﾌﾞｯｼﾝｸﾞ	2	
A2	239A5-40061		PEDAL-ASSY,BRAKE	ﾌﾞﾚｰｷﾍﾟﾀﾞﾙｱｯｾﾝ	1	INC.3,4
3	NO PART NO.	#	PEDAL,BRAKE	ﾍﾟﾀﾞﾙ	1	
4	239B5-42221		BUSHING	ﾌﾞｯｼﾝｸﾞ	2	
5	239H5-40221		BRACKET,PEDAL	ﾌﾞﾗｹｯﾄ	1	
6	239B5-42231		SPACER	ｽﾍﾟｰｻ	2	
7	01103-10120		BOLT	ﾎﾞﾙﾄ	2	
8	02002-00010		WASHER	ﾜｯｼｬ	2	
9	02011-00010		WASHER	ﾜｯｼｬ	2	
10	239B5-42201		SPRING	ｽﾌﾟﾘﾝｸﾞ	1	
11	239B5-42211		SPRING	ｽﾌﾟﾘﾝｸﾞ	1	
12	01120-08035		BOLT	ﾎﾞﾙﾄ	2	
13	01402-00008		NUT	ﾅｯﾄ	2	

FIG.141A FOOT PEDAL (OIL CLUTCH)

(F50254C1) ﾌｯﾄﾍﾟﾀﾞﾙ

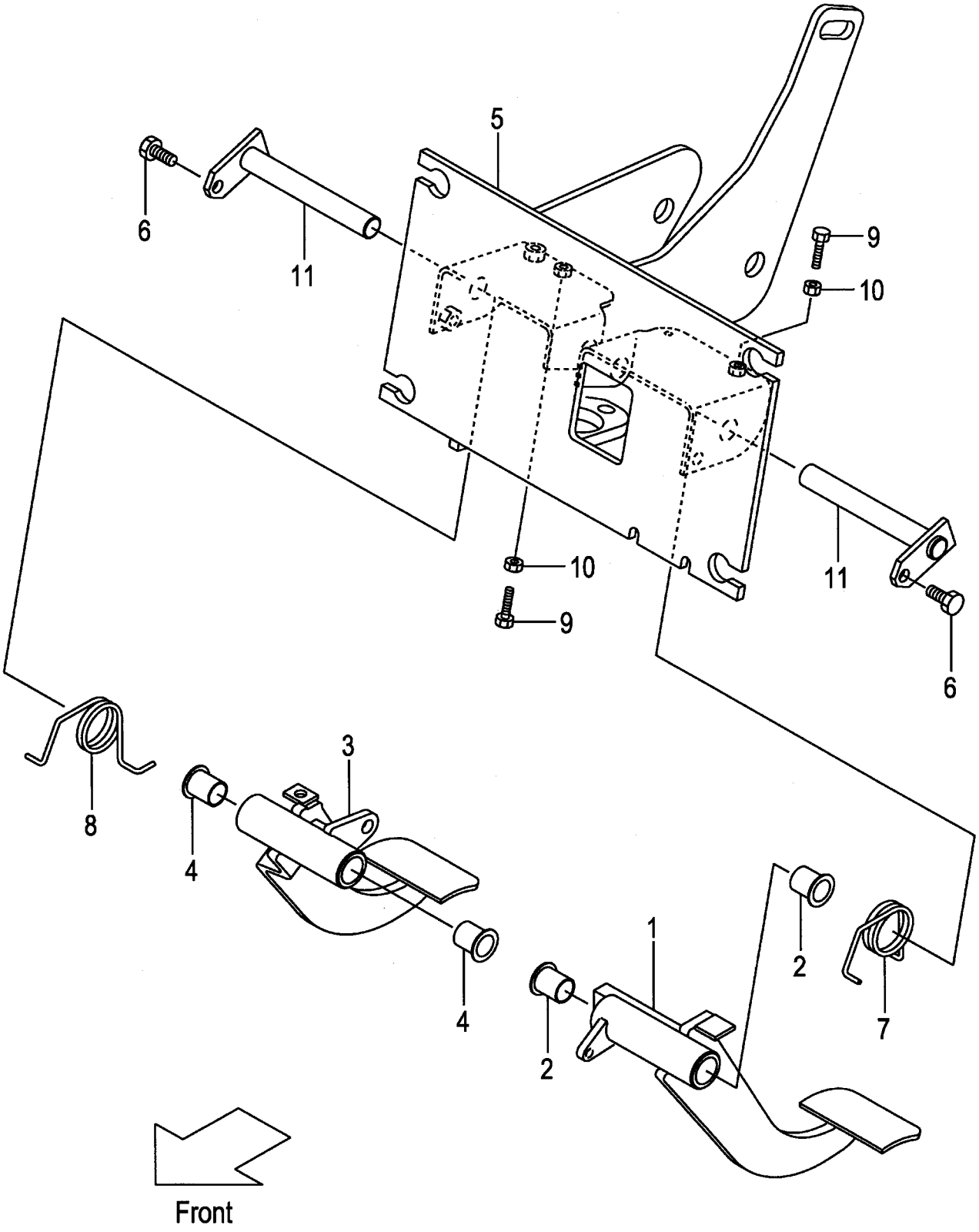

A:FG20W6 FG25W6:65659-
B:FD20W6 FD25W6:84369-

Item No	Part No.	Mark	Description		Req'd	Remarks : Serial No.
A1	239H5-40411		PEDAL-ASSY,INCHING	ｲﾝﾁﾝｸﾞﾍﾟﾀﾞﾙｱｯｾﾝ	1	INC.1,2
1	NO PART NO.	#	PEDAL,INCHING	ﾍﾟﾀﾞﾙ	1	
2	239B5-42221		BUSHING	ﾌﾞｯｼﾝｸﾞ	2	
A2	238F5-40061		PEDAL-ASSY,BRAKE	ﾌﾞﾚｰｷﾍﾟﾀﾞﾙｱｯｾﾝ	1	INC.3,4
3	NO PART NO.	#	PEDAL,BRAKE	ﾍﾟﾀﾞﾙ	1	
4	239B5-42221		BUSHING	ﾌﾞｯｼﾝｸﾞ	2	
5	238S5-40201		BRACKET,PEDAL	ﾌﾞﾗｹｯﾄ	1	A:65659-66056 B:84369-84952
-	238S5-40202		BRACKET,PEDAL	ﾌﾞﾗｹｯﾄ	1	A:66057- B:84953-
6	01186-08016		BOLT	ﾎﾞﾙﾄ	2	
7	239B5-42201		SPRING	ｽﾌﾟﾘﾝｸﾞ	1	
8	239B5-42211		SPRING	ｽﾌﾟﾘﾝｸﾞ	1	
9	01120-08035		BOLT	ﾎﾞﾙﾄ	2	
10	01402-00008		NUT	ﾅｯﾄ	2	
11	238F5-40501		SHAFT	ｼｬﾌﾄ	2	

FIG.142 FOOT PEDAL (CLUTCH):[EXB/PC]

(F50254H0) ﾌｯﾄﾍﾟﾀﾞﾙ

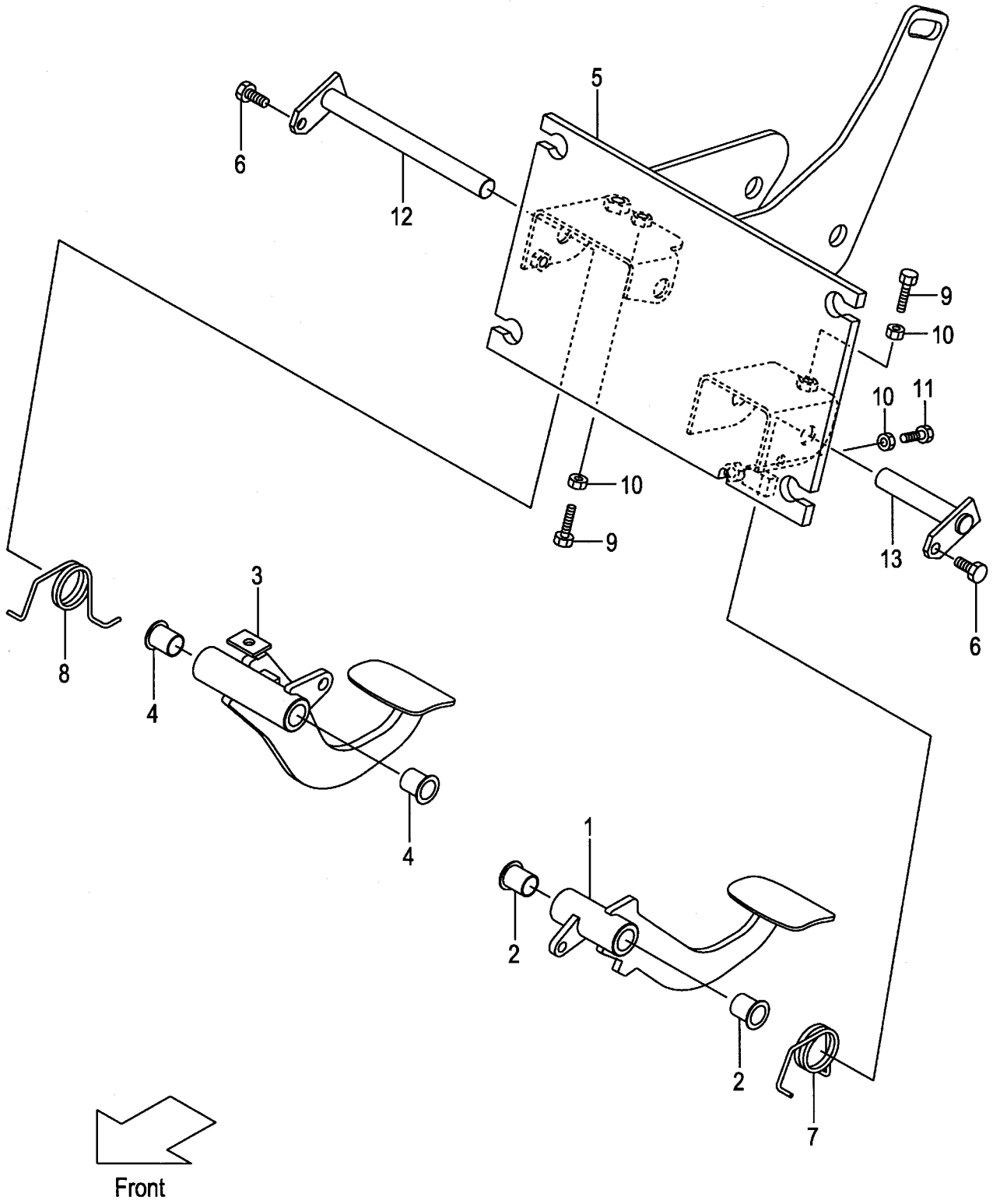

A:FG20C6 FG25C6
B:FD20C6 FD25C6

Item No	Part No.	Mark	Description		Req'd	Remarks : Serial No.
A1	239H5-40331		PEDAL-ASSY,INCHING	ｲﾝﾁﾝｸﾞﾍﾟﾀﾞﾙｱｯｾﾝ	1	[EXB/PC] INC.1,2
1	NO PART NO.	#	PEDAL,INCHING	ﾍﾟﾀﾞﾙ	1	[EXB/PC]
2	239B5-42221		BUSHING	ﾌﾞｯｼﾝｸﾞ	2	[EXB/PC]
A2	238K5-40251		PEDAL-ASSY,BRAKE	ﾌﾞﾚｰｷﾍﾟﾀﾞﾙｱｯｾﾝ	1	[EXB/PC] INC.3,4
3	NO PART NO.	#	PEDAL,BRAKE	ﾍﾟﾀﾞﾙ	1	[EXB/PC]
4	239B5-42221		BUSHING	ﾌﾞｯｼﾝｸﾞ	2	[EXB/PC]
5	239H5-40351		BRACKET,PEDAL	ﾌﾞﾗｹｯﾄ	1	[EXB/PC]
6	01186-08016		BOLT	ﾎﾞﾙﾄ	2	[EXB/PC]
7	239B5-42201		SPRING	ｽﾌﾟﾘﾝｸﾞ	1	[EXB/PC]
8	239B5-42211		SPRING	ｽﾌﾟﾘﾝｸﾞ	1	[EXB/PC]
9	01120-08035		BOLT	ﾎﾞﾙﾄ	2	[EXB/PC]
10	01402-00008		NUT	ﾅｯﾄ	3	[EXB/PC]
11	01120-08020		BOLT	ﾎﾞﾙﾄ	1	[EXB/PC]
12	238F5-40501		SHAFT	ｼｬﾌﾄ	1	[EXB/PC]
13	239H5-40361		SHAFT	ｼｬﾌﾄ	1	[EXB/PC]

FIG.143 FOOT PEDAL CYLINDER (CLUTCH)

(F5025420) フットペダルシリンダ

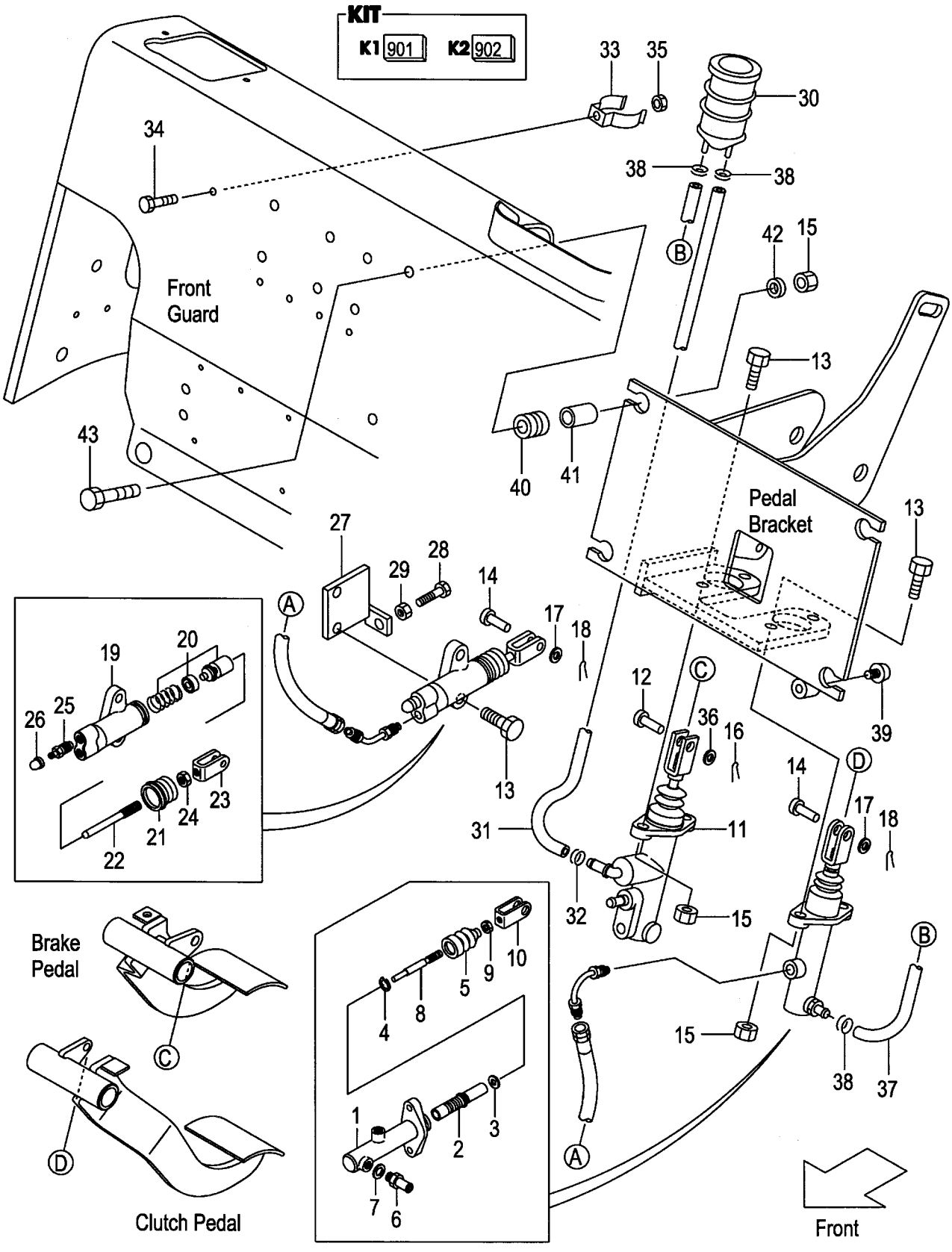

A:FG20C17 FG25C17 C:FD20C17 FD25C17
B:FG20C6 FG25C6 D:FD20C6 FD25C6

Item No	Part No.	Mark	Description		Req'd	Remarks : Serial No.
A1	239A5-40501		CYL-ASSY,CLUTCH-MASTER	ｼﾘﾝﾀﾞｱｯｾﾝ	1	INC.1-10
901	216G5-32201	K1	KIT,REPAIR	ﾘﾍﾟｱｷｯﾄ	1	INC.2-5
1	NO PART NO.	#	BODY,CYL	ﾎﾞﾃﾞｨ	1	
2	NO PART NO.	#*	PISTON	ﾋﾟｽﾄﾝ	1	
3	216G5-32311	*	PLATE,PISTON-STOPPER	ﾌﾟﾚｰﾄ	1	
4	25595-42311	*	RING,SNAP	ｽﾅｯﾌﾟﾘﾝｸﾞ	1	
5	216G5-32321	*	BOOT	ﾌﾞｰﾂ	1	
6	216G5-32331		UNION	ﾕﾆｵﾝ	1	
7	216G5-32341		GASKET	ｶﾞｽｹｯﾄ	1	
8	NO PART NO.	#	ROD,PUSH	ﾛｯﾄﾞ	1	
9	01402-00008		NUT	ﾅｯﾄ	1	
10	25595-42452		CLEVIS	ｸﾚﾋﾞｽ	1	
11	239A5-40101		CYL,BRAKE-MASTER	ｼﾘﾝﾀﾞ	1	A:1-11012
						B:1-65130
						C:1-11005
						D:1-83265
						SEE FIG.153
-	239A5-40102		CYL,BRAKE-MASTER	ｼﾘﾝﾀﾞ	1	A:11013-
						B:65131-
						C:11006-
						D:83266-
						SEE FIG.153A
12	02262-10030		PIN,CLEVIS	ﾋﾟﾝ	1	
13	01184-10030		BOLT	ﾎﾞﾙﾄ	6	
14	02262-08025		PIN,CLEVIS	ﾋﾟﾝ	2	
15	01400-00010		NUT	ﾅｯﾄ	8	
16	02200-32025		PIN,COTTER	ﾋﾟﾝ	1	
17	02000-00008		WASHER	ﾜｯｼｬ	2	
18	02200-02020		PIN,COTTER	ﾋﾟﾝ	2	
A2	214A5-32312		CYL-ASSY,CLUTCH-RELEASE	ｼﾘﾝﾀﾞｱｯｾﾝ	1	INC.19-26
902	214A5-33012	K2	KIT,REPAIR	ﾘﾍﾟｱｷｯﾄ	1	INC.20,21
19	NO PART NO.	#	BODY,CYL	ﾎﾞﾃﾞｨ	1	
20	NO PART NO.	#*	PISTON	ﾋﾟｽﾄﾝ	1	
21	NO PART NO.	#*	BOOT	ﾌﾞｰﾂ	1	
A3	214A5-33052		ROD-ASSY,PUSH	ﾌﾟｯｼｭﾛｯﾄﾞｱｯｾﾝ	1	INC.22-24
22	214A5-33062		ROD,PUSH	ﾛｯﾄﾞ	1	
23	25595-42452		CLEVIS	ｸﾚﾋﾞｽ	1	
24	01402-00008		NUT	ﾅｯﾄ	1	
25	214A5-33031		VALVE,BLEEDER	ﾊﾞﾙﾌﾞ	1	
26	214A5-33041		CAP,BLEEDER	ｷｬｯﾌﾟ	1	
27	214A5-32101		BRACKET,RELEASE-CYL	ﾌﾞﾗｹｯﾄ	1	
28	01100-10030		BOLT	ﾎﾞﾙﾄ	1	
29	01402-00010		NUT	ﾅｯﾄ	1	
30	216G5-42011		TANK,RESERVE	ﾀﾝｸ	1	
31	239A5-42411		HOSE,RESERVE	ﾎｰｽ	1	
32	25595-42491		CLIP,HOSE	ｸﾘｯﾌﾟ	1	
33	224G5-42061		CLIP,RESERVE-TANK	ｸﾘｯﾌﾟ	1	
34	239A5-42381		BOLT	ﾎﾞﾙﾄ	1	
35	01400-00006		NUT	ﾅｯﾄ	1	
36	02000-00010		WASHER	ﾜｯｼｬ	1	

FIG.143 FOOT PEDAL CYLINDER (CLUTCH)

(F5025420) フットペダルシリンダ

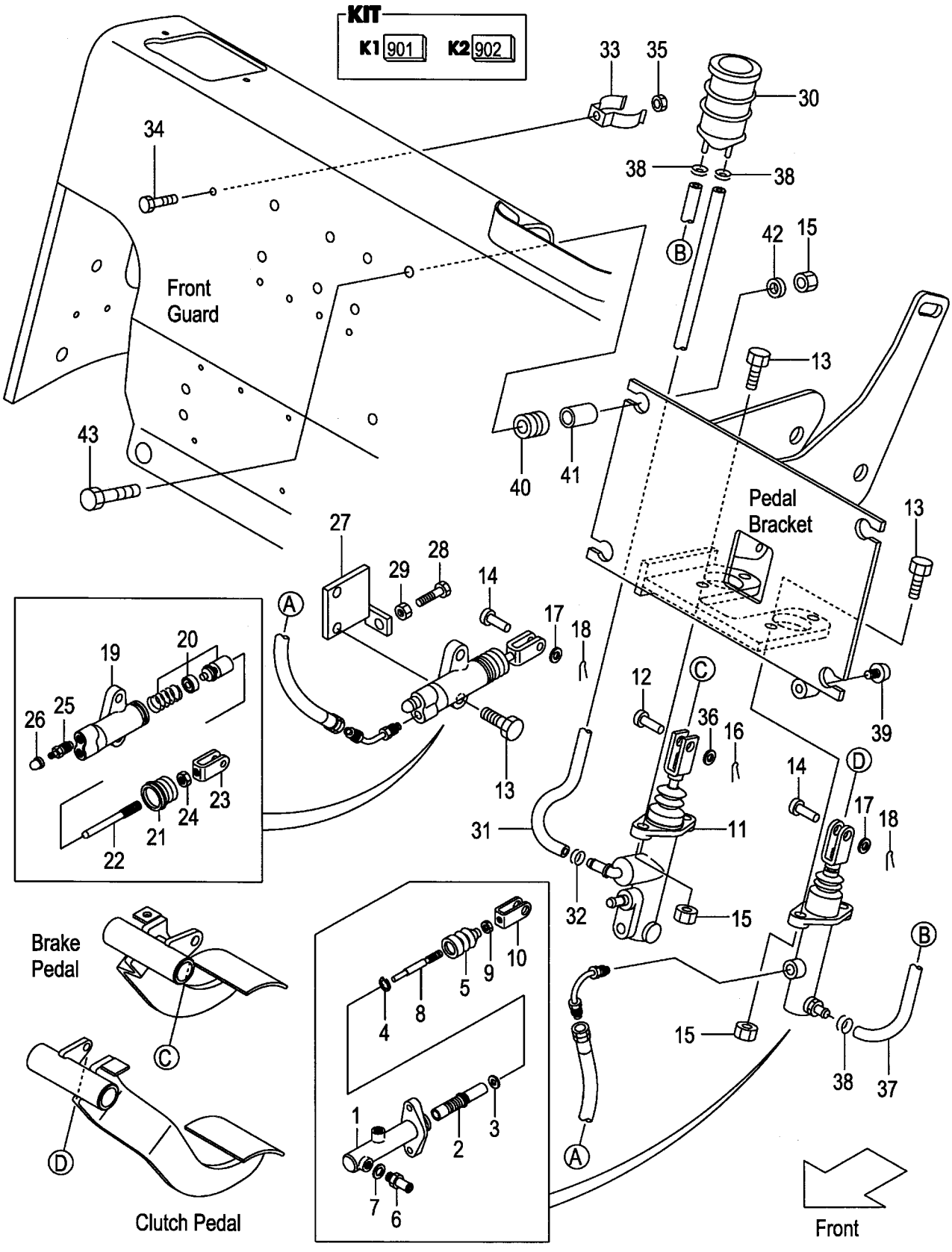

A:FG20C17 FG25C17 C:FD20C17 FD25C17
B:FG20C6 FG25C6 D:FD20C6 FD25C6

Item No	Part No.	Mark	Description		Req'd	Remarks : Serial No.
37	239A5-42401		HOSE,RESERVE	ホース	1	
38	25785-43091		CLIP,HOSE	クリップ	3	
39	23456-42181		STOPPER	ストッパ	1	
40	216G6-42031		RUBBER,MOUNT	ラバー	4	A:1-11039 B:1-66056 C:1-11018 D:1-84952
-	238F5-42601		RUBBER,MOUNT	ラバー	4	A:11040- B:66057- C:11019- D:84953-
41	239B5-42721		COLLAR	カラー	4	A:1-11039 B:1-66056 C:1-11018 D:1-84952
-	216G7-32011		COLLAR	カラー	4	A:11040- B:66057- C:11019- D:84953-
42	22252-32251		WASHER	ワッシャ	4	
43	216G6-43241		BOLT	ボルト	4	

FIG.144 FOOT PEDAL CYLINDER (CLUTCH):[PC][EXB/PC/OBT]

(F5025460) ﾌｯﾄﾍﾟﾀﾞﾙｼﾘﾝﾀﾞ

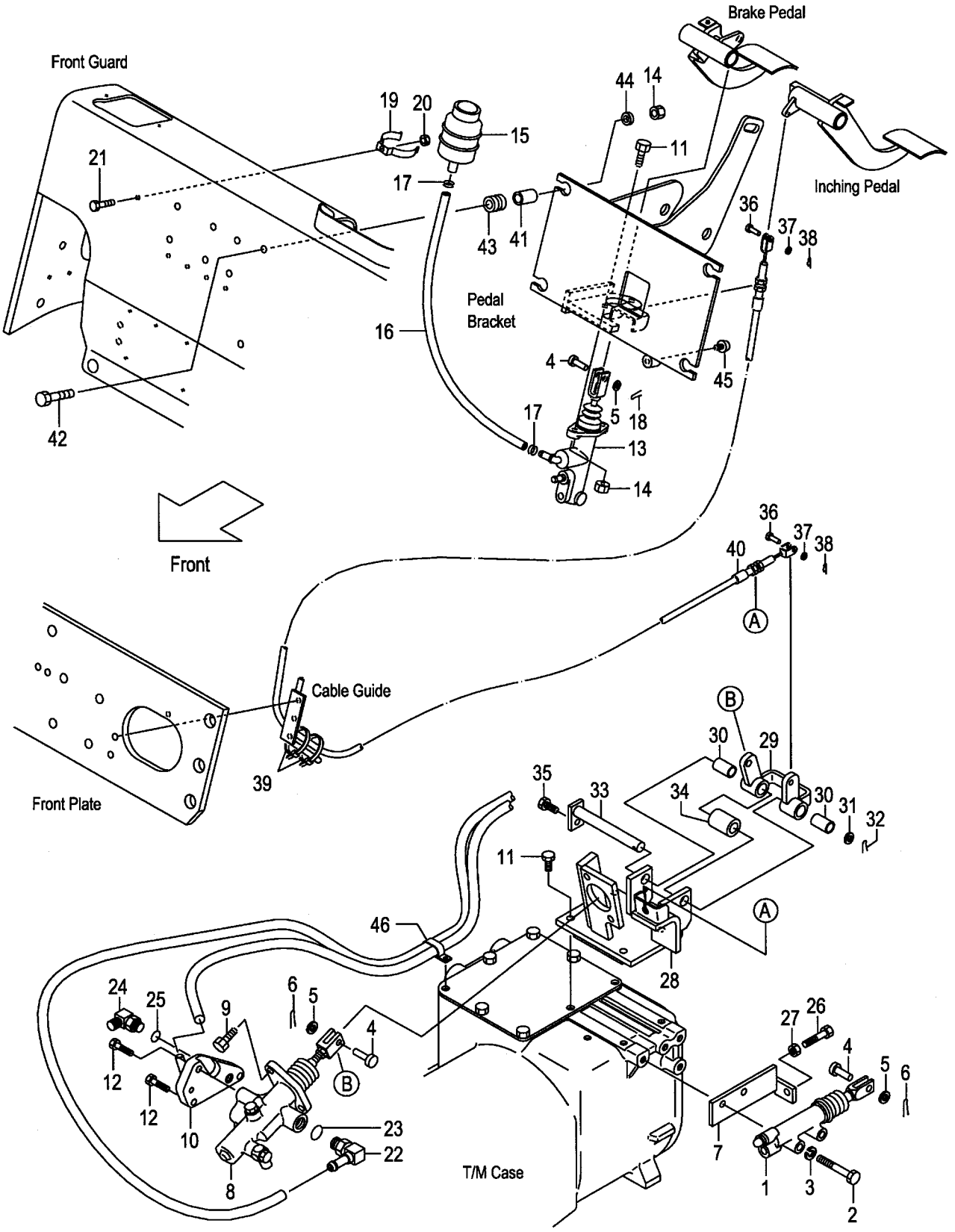

A:FG20C17 FG25C17 C:FD20C17 FD25C17
B:FG20C6 FG25C6 D:FD20C6 FD25C6

Item No	Part No.	Mark	Description		Req'd	Remarks : Serial No.
1	522A2-10401		CYL,CLUTCH-RELEASE	ｼﾘﾝﾀﾞ	1	[PC]SEE FIG.154
-	522A2-10401		CYL,CLUTCH-RELEASE	ｼﾘﾝﾀﾞ	1	B,D
						[EXB/PC/OBT]SEE FIG.154
2	01103-10060		BOLT	ﾎﾞﾙﾄ	2	[PC]
-	01103-10060		BOLT	ﾎﾞﾙﾄ	2	B,D
						[EXB/PC/OBT]
3	02010-00010		WASHER	ﾜｯｼｬ	2	[PC]
-	02010-00010		WASHER	ﾜｯｼｬ	2	B,D
						[EXB/PC/OBT]
4	02262-10030		PIN,CLEVIS	ﾋﾟﾝ	3	[PC]
-	02262-10030		PIN,CLEVIS	ﾋﾟﾝ	3	B,D
						[EXB/PC/OBT]
5	02000-00010		WASHER	ﾜｯｼｬ	3	[PC]
-	02000-00010		WASHER	ﾜｯｼｬ	3	B,D
						[EXB/PC/OBT]
6	02200-32020		PIN,COTTER	ﾋﾟﾝ	2	[PC]
-	02200-32020		PIN,COTTER	ﾋﾟﾝ	2	B,D
						[EXB/PC/OBT]
7	214L5-32101		BRACKET,RELEASE-CYL	ﾌﾞﾗｹｯﾄ	1	[PC]
-	214L5-32101		BRACKET,RELEASE-CYL	ﾌﾞﾗｹｯﾄ	1	B,D
						[EXB/PC/OBT]
8	224W5-30202		BOOSTER,CLUTCH	ﾌﾞｰｽﾀ	1	[PC]SEE FIG.155
-	224W5-30202		BOOSTER,CLUTCH	ﾌﾞｰｽﾀ	1	B,D
						[EXB/PC/OBT]SEE FIG.155
9	01184-10025		BOLT	ﾎﾞﾙﾄ	2	[PC]
-	01184-10025		BOLT	ﾎﾞﾙﾄ	2	B,D
						[EXB/PC/OBT]
10	239H5-42461		ADAPTER	ｱﾀﾞﾌﾟﾀ	1	[PC]
-	239H5-42461		ADAPTER	ｱﾀﾞﾌﾟﾀ	1	B,D
						[EXB/PC/OBT]
11	01184-10030		BOLT	ﾎﾞﾙﾄ	6	[PC]
-	01184-10030		BOLT	ﾎﾞﾙﾄ	6	B,D
						[EXB/PC/OBT]
12	01184-10055		BOLT	ﾎﾞﾙﾄ	3	[PC]
-	01184-10055		BOLT	ﾎﾞﾙﾄ	3	B,D
						[EXB/PC/OBT]
13	239A5-40101		CYL,BRAKE-MASTER	ｼﾘﾝﾀﾞ	1	A:1-11012
						B:1-65130
						C:1-11005
						D:1-83265
						[PC]SEE FIG.153
-	239A5-40102		CYL,BRAKE-MASTER	ｼﾘﾝﾀﾞ	1	A:11013-
						B:65131-
						C:11006-
						D:83266-
						[PC]SEE FIG.153A
-	239A5-40101		CYL,BRAKE-MASTER	ｼﾘﾝﾀﾞ	1	B:1-65130
						D:1-83265
						[EXB/PC/OBT]SEE FIG.153

FIG.144 FOOT PEDAL CYLINDER (CLUTCH):[PC][EXB/PC/OBT]

(F5025460) ﾌｯﾄﾍﾟﾀﾞﾙｼﾘﾝﾀﾞ

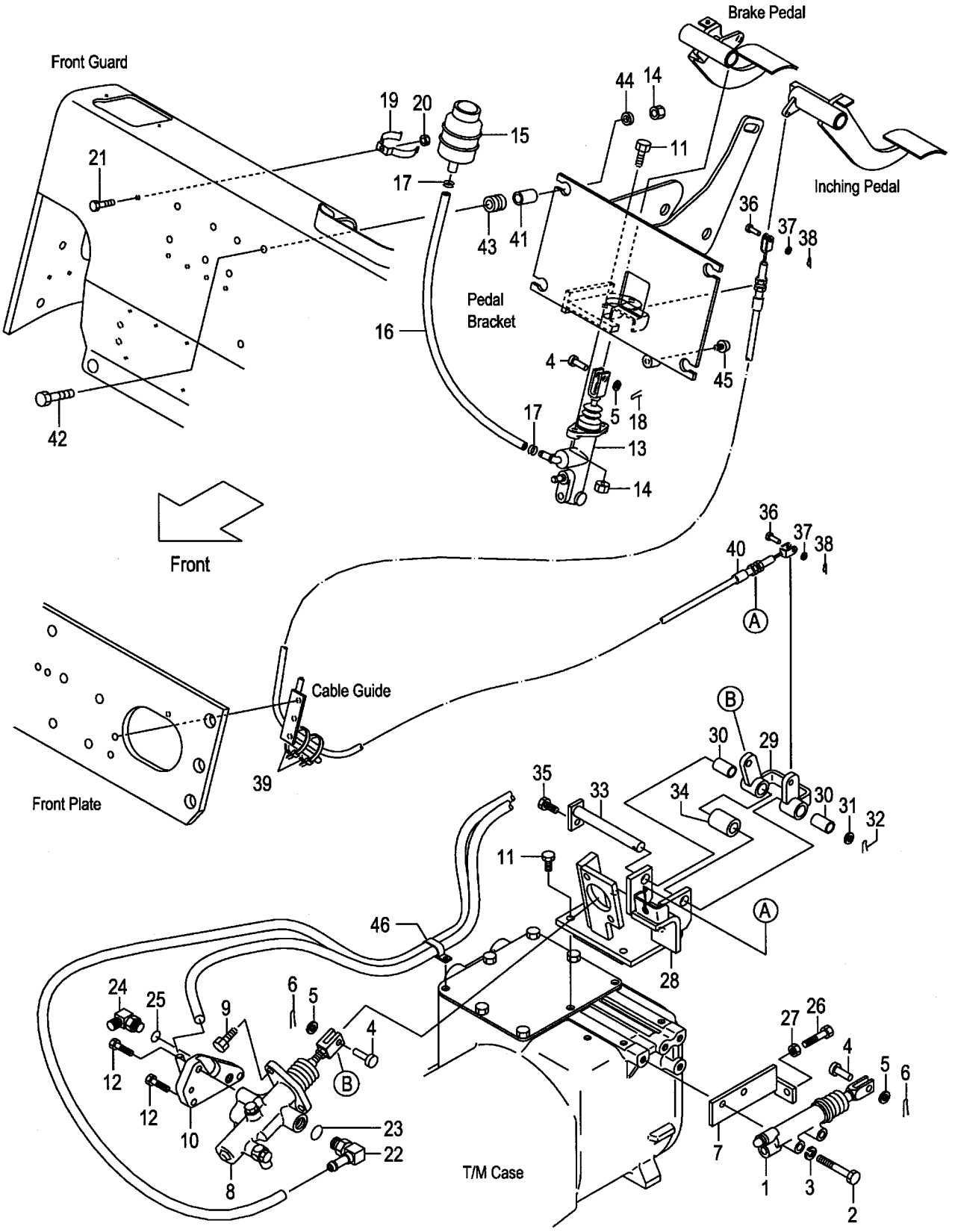

A:FG20C17 FG25C17 C:FD20C17 FD25C17
B:FG20C6 FG25C6 D:FD20C6 FD25C6

Item No	Part No.	Mark	Description		Req'd	Remarks : Serial No.
-	239A5-40102		CYL,BRAKE-MASTER	ｼﾘﾝﾀﾞ	1	B:65131-
						D:83266-
						[EXB/PC/OBT]SEE FIG.153A
14	01400-00010		NUT	ﾅｯﾄ	6	[PC]
-	01400-00010		NUT	ﾅｯﾄ	6	B,D
						[EXB/PC/OBT]
15	23775-42101		TANK,RESERVE	ﾀﾝｸ	1	[PC]
-	23775-42101		TANK,RESERVE	ﾀﾝｸ	1	B,D
						[EXB/PC/OBT]
16	22655-42591		HOSE,RESERVE	ﾎｰｽ	1	[PC]
-	22655-42591		HOSE,RESERVE	ﾎｰｽ	1	B,D
						[EXB/PC/OBT]
17	25595-42491		CLIP,HOSE	ｸﾘｯﾌﾟ	2	[PC]
-	25595-42491		CLIP,HOSE	ｸﾘｯﾌﾟ	2	B,D
						[EXB/PC/OBT]
18	02200-32025		PIN,COTTER	ﾋﾟﾝ	1	[PC]
-	02200-32025		PIN,COTTER	ﾋﾟﾝ	1	B,D
						[EXB/PC/OBT]
19	224G5-42061		CLIP,RESERVE-TANK	ｸﾘｯﾌﾟ	1	[PC]
-	224G5-42061		CLIP,RESERVE-TANK	ｸﾘｯﾌﾟ	1	B,D
						[EXB/PC/OBT]
20	01400-00006		NUT	ﾅｯﾄ	1	[PC]
-	01400-00006		NUT	ﾅｯﾄ	1	B,D
						[EXB/PC/OBT]
21	239A5-42381		BOLT	ﾎﾞﾙﾄ	1	[PC]
-	239A5-42381		BOLT	ﾎﾞﾙﾄ	1	B,D
						[EXB/PC/OBT]
A1	224W7-60311		FITTING-ASSY,HOSE	ﾎｰｽﾌｨｯﾃｨﾝｸﾞｱｯｾﾝ	1	[PC] INC.22,23
-	224W7-60311		FITTING-ASSY,HOSE	ﾎｰｽﾌｨｯﾃｨﾝｸﾞｱｯｾﾝ	1	B,D
						[EXB/PC/OBT] INC.22,23
22	NO PART NO.	#	FITTING,HOSE	ﾌｨｯﾃｨﾝｸﾞ	1	[PC]
-	NO PART NO.	#	FITTING,HOSE	ﾌｨｯﾃｨﾝｸﾞ	1	B,D
						[EXB/PC/OBT]
23	89140-00006		O-RING	Oﾘﾝｸﾞ	1	[PC]
-	89140-00006		O-RING	Oﾘﾝｸﾞ	1	B,D
						[EXB/PC/OBT]
A2	04150-20202		ELBOW-ASSY	ｴﾙﾎﾞｱｯｾﾝ	1	[PC] INC.24,25
-	04150-20202		ELBOW-ASSY	ｴﾙﾎﾞｱｯｾﾝ	1	B,D
						[EXB/PC/OBT] INC.24,25
24	NO PART NO.	#	ELBOW	ｴﾙﾎﾞ	1	[PC]
-	NO PART NO.	#	ELBOW	ｴﾙﾎﾞ	1	B,D
						[EXB/PC/OBT]
25	03320-00110		O-RING	Oﾘﾝｸﾞ	1	[PC]
-	03320-00110		O-RING	Oﾘﾝｸﾞ	1	B,D
						[EXB/PC/OBT]
26	01100-10030		BOLT	ﾎﾞﾙﾄ	1	[PC]
-	01100-10030		BOLT	ﾎﾞﾙﾄ	1	B,D
						[EXB/PC/OBT]
27	01402-00010		NUT	ﾅｯﾄ	1	[PC]

FIG.144 FOOT PEDAL CYLINDER (CLUTCH):[PC][EXB/PC/OBT]

(F5025460) ﾌｯﾄﾍﾟﾀﾞﾙｼﾘﾝﾀﾞ

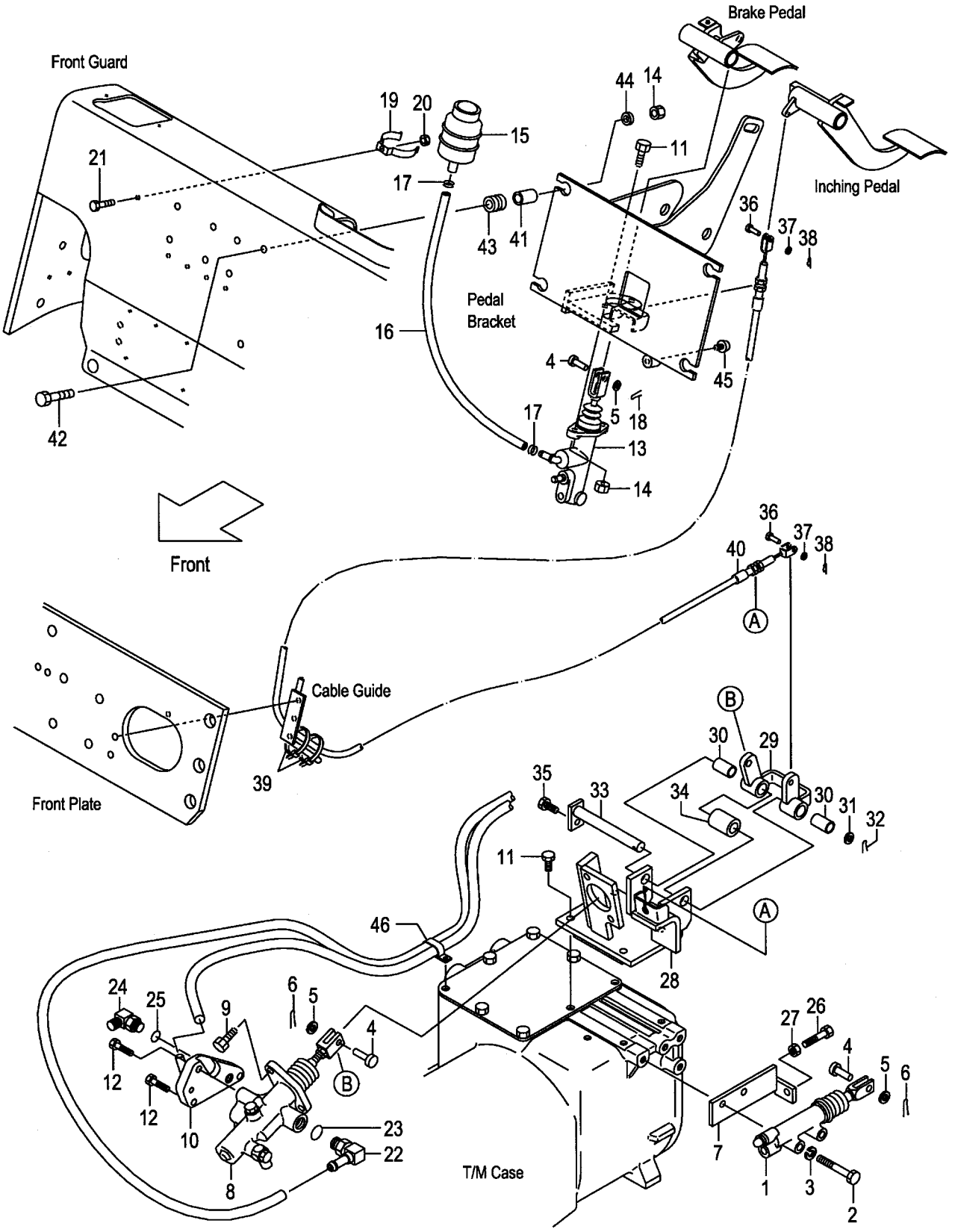

A:FG20C17 FG25C17 C:FD20C17 FD25C17
B:FG20C6 FG25C6 D:FD20C6 FD25C6

Item No	Part No.	Mark	Description		Req'd	Remarks : Serial No.
-	01402-00010		NUT	ﾅｯﾄ	1	B,D
						[EXB/PC/OBT]
A3	239H5-40191		BRACKET-ASSY,BOOSTER	ﾌﾞﾗｹｯﾄｱｯｾﾝ	1	[PC] INC.28-35
-	239H5-40191		BRACKET-ASSY,BOOSTER	ﾌﾞﾗｹｯﾄｱｯｾﾝ	1	B,D
						[EXB/PC/OBT] INC.28-35
28	239H5-40201		BRACKET,BOOSTER	ﾌﾞﾗｹｯﾄ	1	[PC]
-	239H5-40201		BRACKET,BOOSTER	ﾌﾞﾗｹｯﾄ	1	B,D
						[EXB/PC/OBT]
A4	239H5-40211		LINK-ASSY	ﾘﾝｸｱｯｾﾝ	1	[PC] INC.29,30
-	239H5-40211		LINK-ASSY	ﾘﾝｸｱｯｾﾝ	1	B,D
						[EXB/PC/OBT] INC.29,30
29	239H5-42301		LINK	ﾘﾝｸ	1	[PC]
-	239H5-42301		LINK	ﾘﾝｸ	1	B,D
						[EXB/PC/OBT]
30	256C7-42281		BUSHING	ﾌﾞｯｼﾝｸﾞ	2	[PC]
-	256C7-42281		BUSHING	ﾌﾞｯｼﾝｸﾞ	2	B,D
						[EXB/PC/OBT]
31	02000-00016		WASHER	ﾜｯｼｬ	1	[PC]
-	02000-00016		WASHER	ﾜｯｼｬ	1	B,D
						[EXB/PC/OBT]
32	02200-04025		PIN,COTTER	ﾋﾟﾝ	1	[PC]
-	02200-04025		PIN,COTTER	ﾋﾟﾝ	1	B,D
						[EXB/PC/OBT]
33	239H5-40311		SHAFT	ｼｬﾌﾄ	1	[PC]
-	239H5-40311		SHAFT	ｼｬﾌﾄ	1	B,D
						[EXB/PC/OBT]
34	239H5-42371		SPACER	ｽﾍﾟｰｻ	1	[PC]
-	239H5-42371		SPACER	ｽﾍﾟｰｻ	1	B,D
						[EXB/PC/OBT]
35	01183-08016		BOLT	ﾎﾞﾙﾄ	1	[PC]
-	01183-08016		BOLT	ﾎﾞﾙﾄ	1	B,D
						[EXB/PC/OBT]
36	02262-08020		PIN,CLEVIS	ﾋﾟﾝ	2	[PC]
-	02262-08020		PIN,CLEVIS	ﾋﾟﾝ	2	B,D
						[EXB/PC/OBT]
37	02000-00008		WASHER	ﾜｯｼｬ	2	[PC]
-	02000-00008		WASHER	ﾜｯｼｬ	2	B,D
						[EXB/PC/OBT]
38	02200-02016		PIN,COTTER	ﾋﾟﾝ	2	[PC]
-	02200-02016		PIN,COTTER	ﾋﾟﾝ	2	B,D
						[EXB/PC/OBT]
39	04913-11200		BAND	ﾊﾞﾝﾄﾞ	2	[PC]
-	04913-11200		BAND	ﾊﾞﾝﾄﾞ	2	B,D
						[EXB/PC/OBT]
40	239H5-42451		CABLE,INCHING	ｹｰﾌﾞﾙ	1	[PC]
-	239H5-42451		CABLE,INCHING	ｹｰﾌﾞﾙ	1	B,D
						[EXB/PC/OBT]

FIG.144 FOOT PEDAL CYLINDER (CLUTCH):[PC][EXB/PC/OBT]

(F5025460) ﾌｯﾄﾍﾟﾀﾞﾙｼﾘﾝﾀﾞ

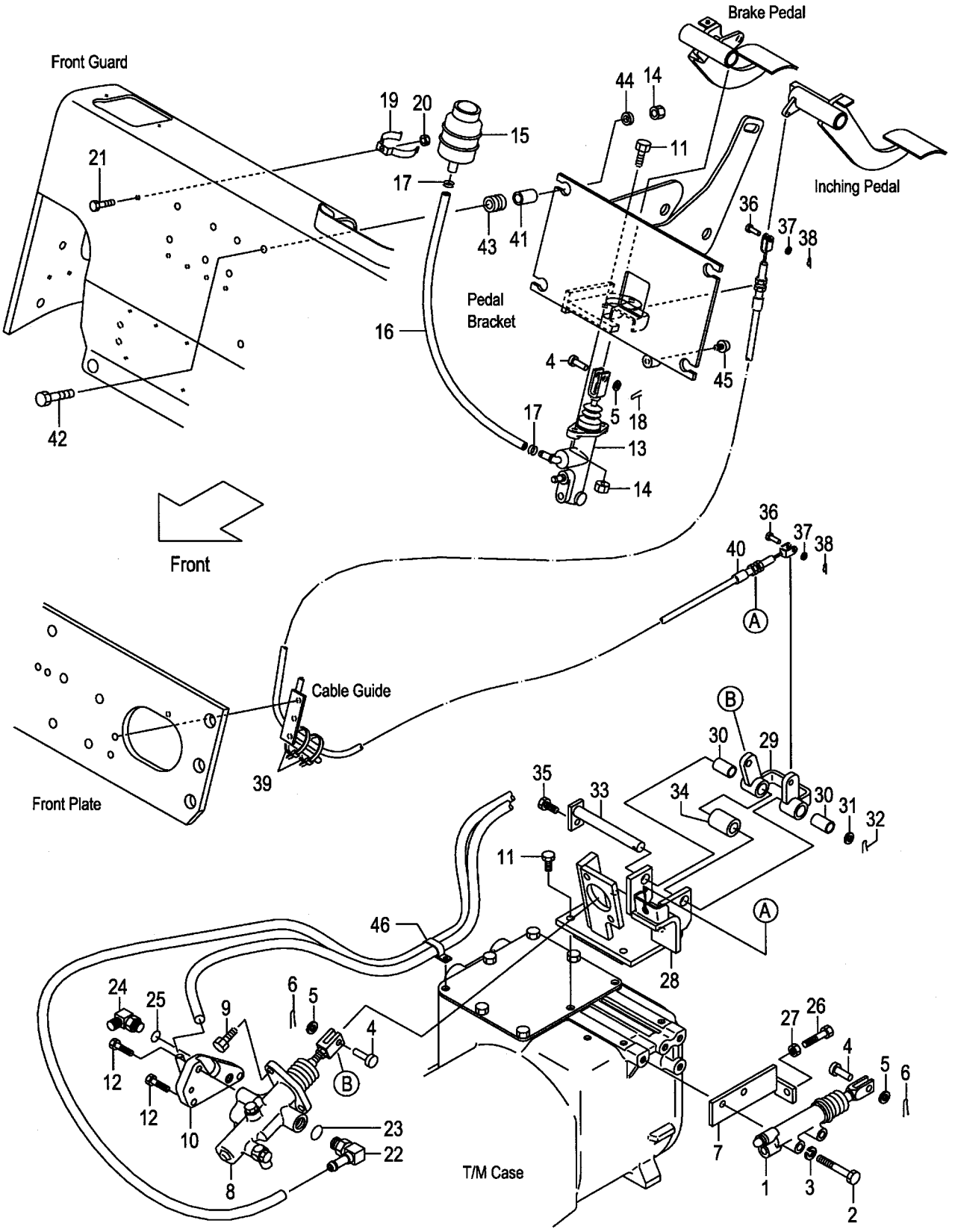

A:FG20C17 FG25C17 C:FD20C17 FD25C17
B:FG20C6 FG25C6 D:FD20C6 FD25C6

Item No	Part No.	Mark	Description		Req'd	Remarks : Serial No.
41	239B5-42721		COLLAR	ｶﾗｰ	4	A:1-11039 B:1-66056 C:1-11018 D:1-84952 [PC]
-	216G7-32011		COLLAR	ｶﾗｰ	4	A:11040- B:66057- C:11019- D:84953- [PC]
-	239B5-42721		COLLAR	ｶﾗｰ	4	B:1-66056 D:1-84952 [EXB/PC/OBT]
-	216G7-32011		COLLAR	ｶﾗｰ	4	B:66057- D:84953- [EXB/PC/OBT]
42	216G6-43241		BOLT	ﾎﾞﾙﾄ	4	[PC]
-	216G6-43241		BOLT	ﾎﾞﾙﾄ	4	B,D [EXB/PC/OBT]
43	216G6-42031		RUBBER,MOUNT	ﾗﾊﾞｰ	4	A:1-11039 B:1-66056 C:1-11018 D:1-84952 [PC]
-	238F5-42601		RUBBER,MOUNT	ﾗﾊﾞｰ	4	A:11040- B:66057- C:11019- D:84953- [PC]
-	216G6-42031		RUBBER,MOUNT	ﾗﾊﾞｰ	4	B:1-66056 D:1-84952 [EXB/PC/OBT]
-	238F5-42601		RUBBER,MOUNT	ﾗﾊﾞｰ	4	B:66057- D:84953- [EXB/PC/OBT]
44	22252-32251		WASHER	ﾜｯｼｬ	4	[PC]
-	22252-32251		WASHER	ﾜｯｼｬ	4	B,D [EXB/PC/OBT]
45	23456-42181		STOPPER	ｽﾄｯﾊﾟ	1	[PC]
-	23456-42181		STOPPER	ｽﾄｯﾊﾟ	1	B,D [EXB/PC/OBT]
46	214A2-42331		CLIP	ｸﾘｯﾌﾟ	1	[PC]
-	214A2-42331		CLIP	ｸﾘｯﾌﾟ	1	B,D [EXB/PC/OBT]

FIG.145 FOOT PEDAL CYLINDER (TOR-CON)

(F50254B0) ﾌｯﾄﾍﾟﾀﾞﾙｼﾘﾝﾀﾞ

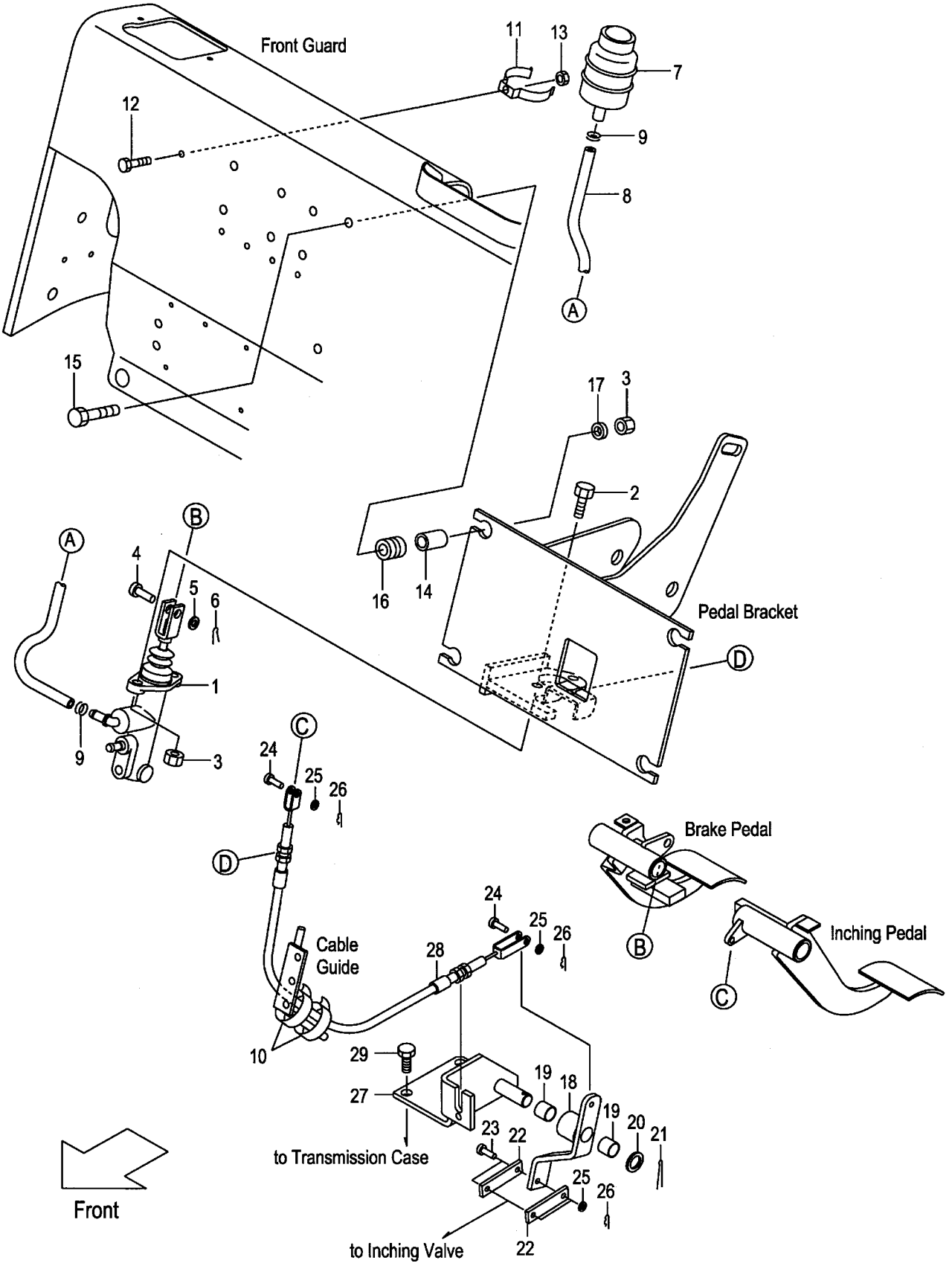

A:FG20T17 FG25T17 C:FD20T17 FD25T17
B:FG20T6 FG25T6 D:FD20T6 FD25T6

Item No	Part No.	Mark	Description		Req'd	Remarks : Serial No.
1	239A5-40101		CYL,BRAKE-MASTER	ｼﾘﾝﾀﾞ	1	A:1-11012 B:1-65130 C:1-11005 D:1-83265 SEE FIG.153
-	239A5-40102		CYL,BRAKE-MASTER	ｼﾘﾝﾀﾞ	1	A:11013- B:65131- C:11006- D:83266- SEE FIG.153A
2	01184-10030		BOLT	ﾎﾞﾙﾄ	2	
3	01400-00010		NUT	ﾅｯﾄ	6	
4	02262-10030		PIN,CLEVIS	ﾋﾟﾝ	1	
5	02000-00010		WASHER	ﾜｯｼｬ	1	
6	02200-32025		PIN,COTTER	ﾋﾟﾝ	1	
7	23775-42101		TANK,RESERVE	ﾀﾝｸ	1	
8	22655-42591		HOSE	ﾎｰｽ	1	
9	25595-42491		CLIP,HOSE	ｸﾘｯﾌﾟ	2	
10	04913-11200		BAND	ﾊﾞﾝﾄﾞ	2	
11	224G5-42061		CLIP,RESERVE-TANK	ｸﾘｯﾌﾟ	1	
12	239A5-42381		BOLT	ﾎﾞﾙﾄ	1	
13	01400-00006		NUT	ﾅｯﾄ	1	
14	239B5-42721		COLLAR	ｶﾗｰ	4	A:1-11039 B:1-66056 C:1-11018 D:1-84952
-	216G7-32011		COLLAR	ｶﾗｰ	4	A:11040- B:66057- C:11019- D:84953-
15	216G6-43241		BOLT	ﾎﾞﾙﾄ	4	
16	216G6-42031		RUBBER,MOUNT	ﾗﾊﾞｰ	4	A:1-11039 B:1-66056 C:1-11018 D:1-84952
-	238F5-42601		RUBBER,MOUNT	ﾗﾊﾞｰ	4	A:11040- B:66057- C:11019- D:84953-
17	22252-32251		WASHER	ﾜｯｼｬ	4	
A1	218H5-40521		LINK-ASSY	ﾘﾝｸｱｯｾﾝ	1	A:1-11016 B:1-65159 C:1-11000 D:1-83386 INC.18,19
-	239G5-40101		LINK-ASSY	ﾘﾝｸｱｯｾﾝ	1	A:11017- B:65160- C:11001- D:83387- INC.18,19

FIG.145 FOOT PEDAL CYLINDER (TOR-CON)

(F50254B0) ﾌｯﾄﾍﾟﾀﾞﾙｼﾘﾝﾀﾞ

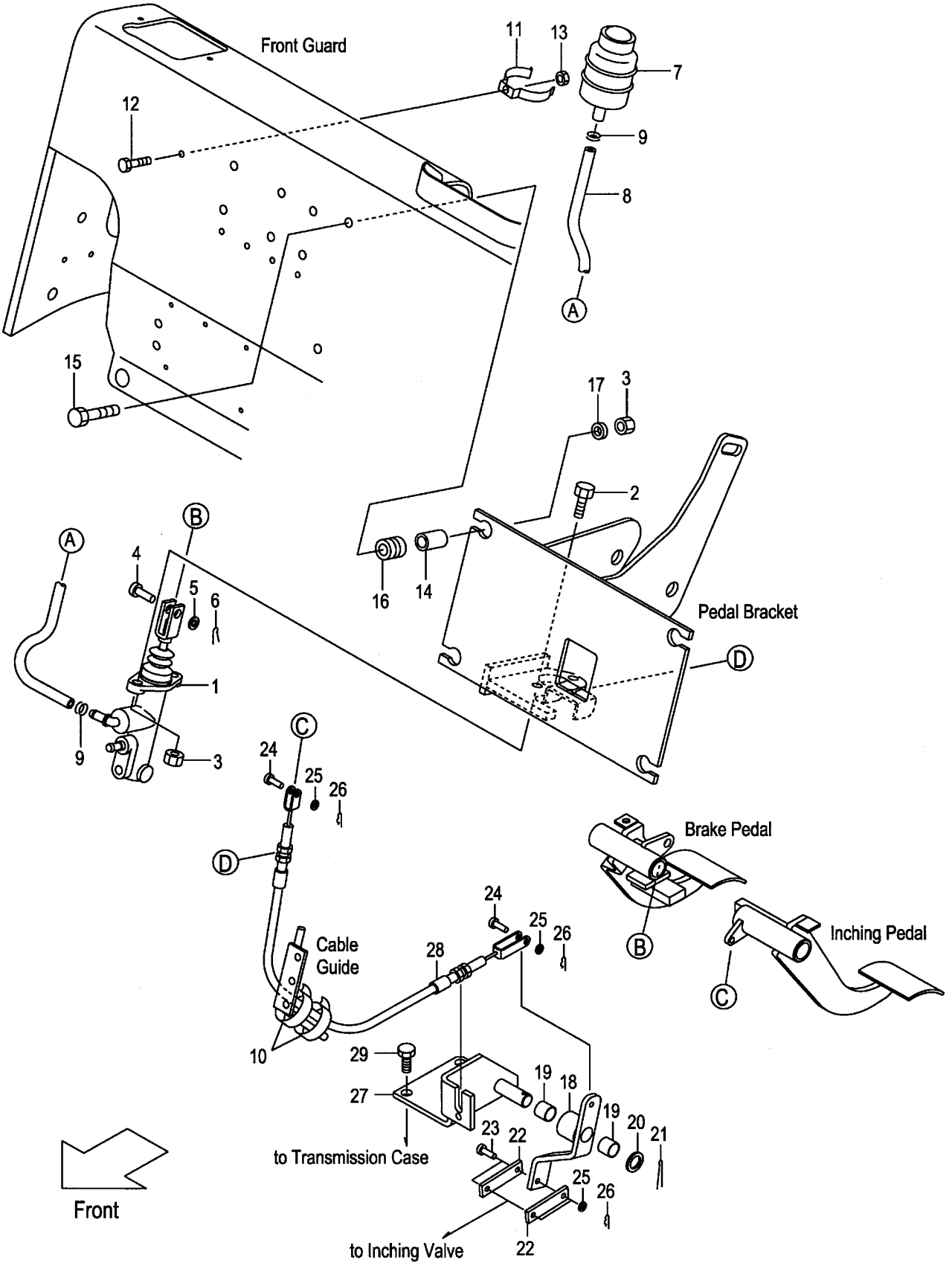

A:FG20T17 FG25T17 C:FD20T17 FD25T17
B:FG20T6 FG25T6 D:FD20T6 FD25T6

Item No	Part No.	Mark	Description		Req'd	Remarks : Serial No.
18	NO PART NO.	#	LINK	ﾘﾝｸ	1	A:1-11016 B:1-65159 C:1-11000 D:1-83386
-	NO PART NO.	#	LINK	ﾘﾝｸ	1	A:11017- B:65160- C:11001- D:83387-
19	23647-40121		BUSHING	ﾌﾞｯｼﾝｸﾞ	2	
20	02000-00016		WASHER	ﾜｯｼｬ	1	
21	02200-04025		PIN,COTTER	ﾋﾟﾝ	1	
22	218H5-42521		PLATE	ﾌﾟﾚｰﾄ	2	
23	02262-06025		PIN,CLEVIS	ﾋﾟﾝ	2	
24	02262-06020		PIN,CLEVIS	ﾋﾟﾝ	2	
25	02000-00006		WASHER	ﾜｯｼｬ	4	
26	216G5-22081		PIN,SNAP	ﾋﾟﾝ	4	
27	239G5-40501		BRACKET,LINK	ﾌﾞﾗｹｯﾄ	1	A:1-11016 B:1-65159 C:1-11000 D:1-83386
-	239G5-40502		BRACKET,LINK	ﾌﾞﾗｹｯﾄ	1	A:11017- B:65160- C:11001- D:83387-
28	239B5-42501		CABLE,INCHING	ｹｰﾌﾞﾙ	1	
29	01184-10020		BOLT	ﾎﾞﾙﾄ	2	

FIG.146 FOOT PEDAL CYLINDER (OIL CLUTCH)

(F50254F0) フットペダルシリンダ

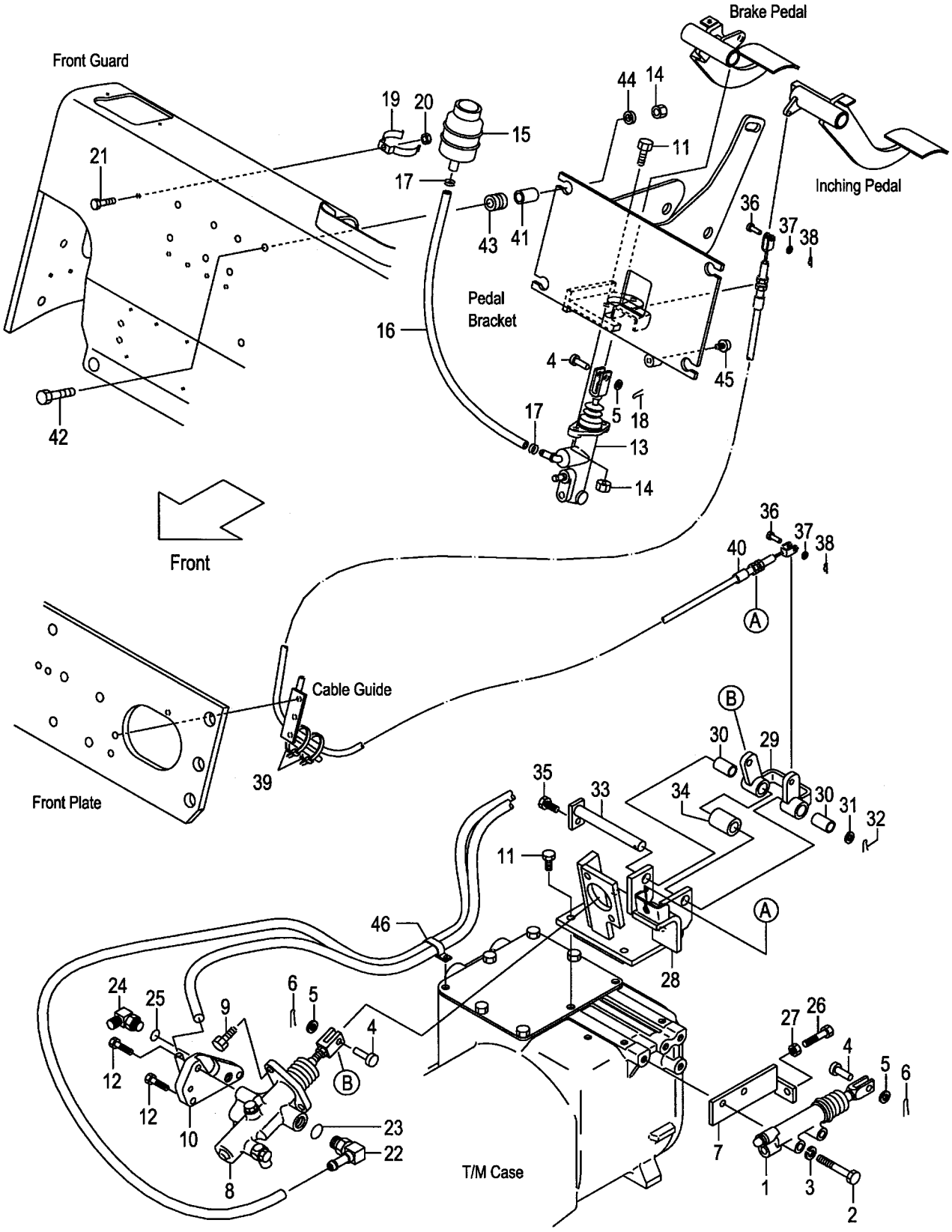

A:FG20W6 FG25W6
B:FD20W6 FD25W6

Item No	Part No.	Mark	Description		Req'd	Remarks : Serial No.
1	522A2-10401		CYL,CLUTCH-RELEASE	ｼﾘﾝﾀﾞ	1	SEE FIG.154
2	01103-10060		BOLT	ﾎﾞﾙﾄ	2	
3	02010-00010		WASHER	ﾜｯｼｬ	2	
4	02262-10030		PIN,CLEVIS	ﾋﾟﾝ	3	
5	02000-00010		WASHER	ﾜｯｼｬ	3	
6	02200-32020		PIN,COTTER	ﾋﾟﾝ	2	
7	214L5-32101		BRACKET,RELEASE-CYL	ﾌﾞﾗｹｯﾄ	1	
8	224W5-30202		BOOSTER,CLUTCH	ﾌﾞｰｽﾀ	1	SEE FIG.155
9	01184-10025		BOLT	ﾎﾞﾙﾄ	2	
10	239H5-42461		ADAPTER	ｱﾀﾞﾌﾟﾀ	1	
11	01184-10030		BOLT	ﾎﾞﾙﾄ	6	
12	01184-10055		BOLT	ﾎﾞﾙﾄ	3	
13	239A5-40101		CYL,BRAKE-MASTER	ｼﾘﾝﾀﾞ	1	A:1-65130 B:1-83265 SEE FIG.153
-	239A5-40102		CYL,BRAKE-MASTER	ｼﾘﾝﾀﾞ	1	A:65131- B:83266- SEE FIG.153A
14	01400-00010		NUT	ﾅｯﾄ	6	
15	23775-42101		TANK,RESERVE	ﾀﾝｸ	1	
16	22655-42591		HOSE,RESERVE	ﾎｰｽ	1	
17	25595-42491		CLIP,HOSE	ｸﾘｯﾌﾟ	2	
18	02200-32025		PIN,COTTER	ﾋﾟﾝ	1	
19	224G5-42061		CLIP,RESERVE-TANK	ｸﾘｯﾌﾟ	1	
20	01400-00006		NUT	ﾅｯﾄ	1	
21	239A5-42381		BOLT	ﾎﾞﾙﾄ	1	
A1	224W7-60311		FITTING-ASSY,HOSE	ﾎｰｽﾌｨｯﾃｨﾝｸﾞｱｯｾﾝ	1	INC.22,23
22	NO PART NO.	#	FITTING,HOSE	ﾌｨｯﾃｨﾝｸﾞ	1	
23	89140-00006		O-RING	Oﾘﾝｸﾞ	1	
A2	04150-20202		ELBOW-ASSY	ｴﾙﾎﾞｱｯｾﾝ	1	INC.24,25
24	NO PART NO.	#	ELBOW	ｴﾙﾎﾞ	1	
25	03320-00110		O-RING	Oﾘﾝｸﾞ	1	
26	01100-10030		BOLT	ﾎﾞﾙﾄ	1	
27	01402-00010		NUT	ﾅｯﾄ	1	
A3	239H5-40191		BRACKET-ASSY,BOOSTER	ﾌﾞﾗｹｯﾄｱｯｾﾝ	1	INC.28-35
28	239H5-40201		BRACKET,BOOSTER	ﾌﾞﾗｹｯﾄ	1	
A4	239H5-40211		LINK-ASSY	ﾘﾝｸｱｯｾﾝ	1	INC.29,30
29	239H5-42301		LINK	ﾘﾝｸ	1	
30	256C7-42281		BUSHING	ﾌﾞｯｼﾝｸﾞ	2	
31	02000-00016		WASHER	ﾜｯｼｬ	1	
32	02200-04025		PIN,COTTER	ﾋﾟﾝ	1	
33	239H5-40311		SHAFT	ｼｬﾌﾄ	1	
34	239H5-42371		SPACER	ｽﾍﾟｰｻ	1	
35	01183-08016		BOLT	ﾎﾞﾙﾄ	1	
36	02262-08020		PIN,CLEVIS	ﾋﾟﾝ	2	
37	02000-00008		WASHER	ﾜｯｼｬ	2	
38	02200-02016		PIN,COTTER	ﾋﾟﾝ	2	
39	04913-11200		BAND	ﾊﾞﾝﾄﾞ	2	
40	239H5-42451		CABLE,INCHING	ｹｰﾌﾞﾙ	1	

FIG.146 FOOT PEDAL CYLINDER (OIL CLUTCH)

(F50254F0) フットペダルシリンダ

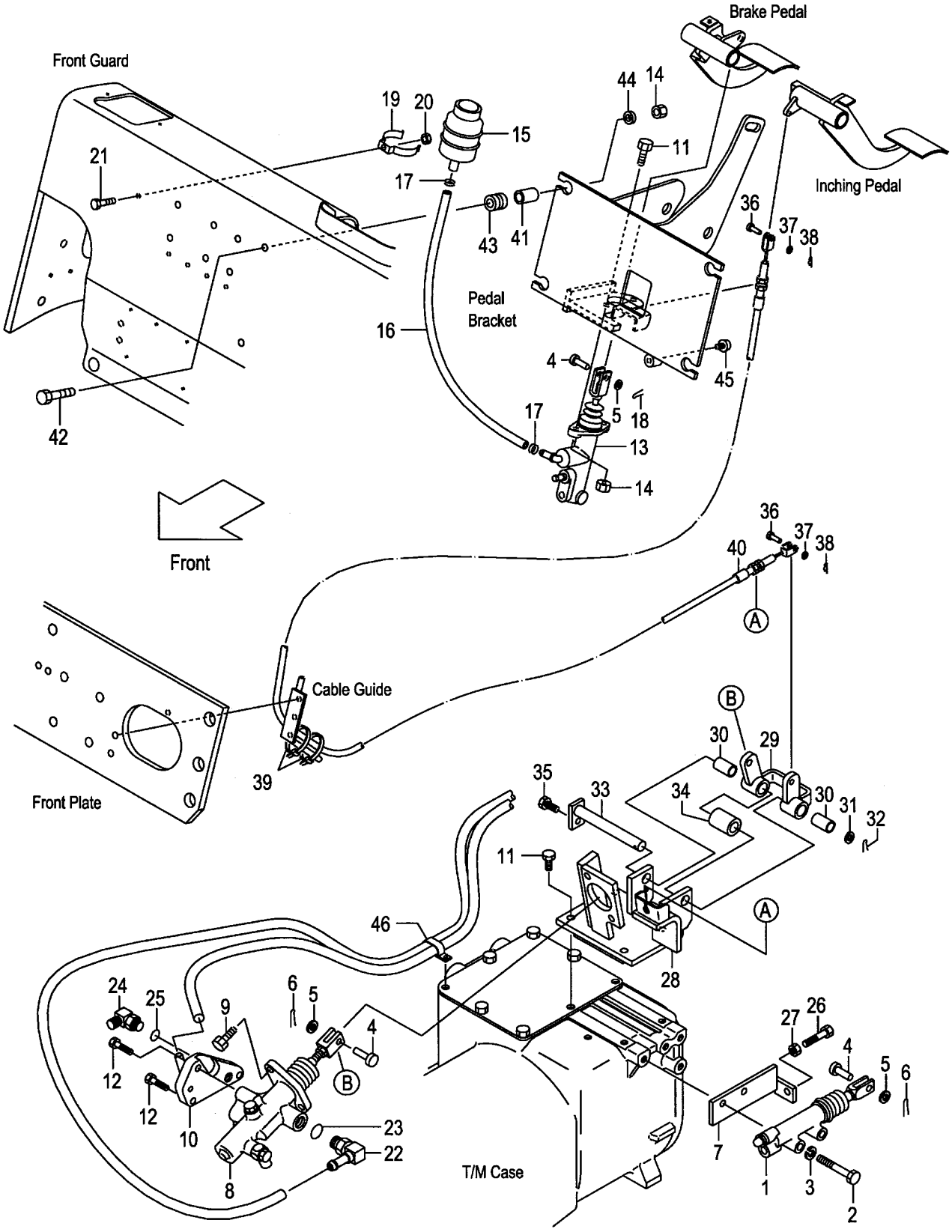

A:FG20W6 FG25W6
B:FD20W6 FD25W6

Item No	Part No.	Mark	Description		Req'd	Remarks : Serial No.
41	239B5-42721		COLLAR	ｶﾗｰ	4	A:1-66056 B:1-84952
-	216G7-32011		COLLAR	ｶﾗｰ	4	A:66057- B:84953-
42	216G6-43241		BOLT	ﾎﾞﾙﾄ	4	
43	216G6-42031		RUBBER,MOUNT	ﾗﾊﾞｰ	4	A:1-66056 B:1-84952
-	238F5-42601		RUBBER,MOUNT	ﾗﾊﾞｰ	4	A:66057- B:84953-
44	22252-32251		WASHER	ﾜｯｼｬ	4	
45	23456-42181		STOPPER	ｽﾄｯﾊﾟ	1	
46	214A2-42331		CLIP	ｸﾘｯﾌﾟ	1	

FIG.147 FOOT PEDAL CYLINDER (CLUTCH):[EXB/PC]

(F50254J0) ﾌｯﾄﾍﾟﾀﾞﾙｼﾘﾝﾀﾞ

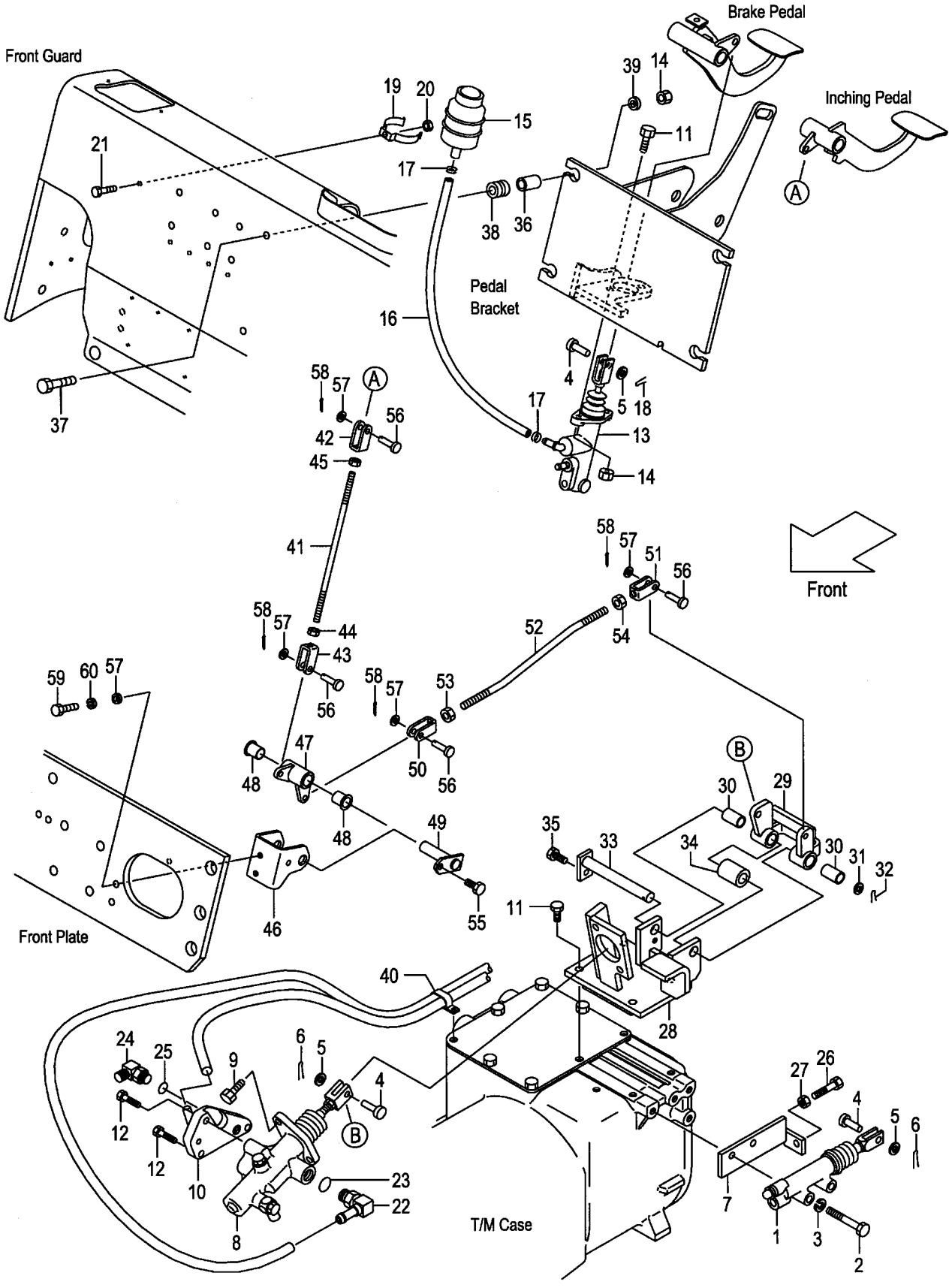

A:FG20C6 FG25C6
B:FD20C6 FD25C6

Item No	Part No.	Mark	Description		Req'd	Remarks : Serial No.
1	522A2-10401		CYL,CLUTCH-RELEASE	ｼﾘﾝﾀﾞ	1	[EXB/PC]SEE FIG.154
2	01103-10060		BOLT	ﾎﾞﾙﾄ	2	[EXB/PC]
3	02010-00010		WASHER	ﾜｯｼｬ	2	[EXB/PC]
4	02262-10030		PIN,CLEVIS	ﾋﾟﾝ	3	[EXB/PC]
5	02000-00010		WASHER	ﾜｯｼｬ	3	[EXB/PC]
6	02200-32020		PIN,COTTER	ﾋﾟﾝ	2	[EXB/PC]
7	214L5-32101		BRACKET,RELEASE-CYL	ﾌﾞﾗｹｯﾄ	1	[EXB/PC]
8	224W5-30202		BOOSTER,CLUTCH	ﾌﾞｰｽﾀ	1	[EXB/PC]SEE FIG.155
9	01184-10025		BOLT	ﾎﾞﾙﾄ	2	[EXB/PC]
10	239H5-42461		ADAPTER	ｱﾀﾞﾌﾟﾀ	1	[EXB/PC]
11	01184-10030		BOLT	ﾎﾞﾙﾄ	6	[EXB/PC]
12	01184-10055		BOLT	ﾎﾞﾙﾄ	3	[EXB/PC]
13	239A5-40102		CYL,BRAKE-MASTER	ｼﾘﾝﾀﾞ	1	[EXB/PC]SEE FIG.153A
14	01400-00010		NUT	ﾅｯﾄ	6	[EXB/PC]
15	23775-42101		TANK,RESERVE	ﾀﾝｸ	1	[EXB/PC]
16	22655-42591		HOSE,RESERVE	ﾎｰｽ	1	[EXB/PC]
17	25595-42491		CLIP,HOSE	ｸﾘｯﾌﾟ	2	[EXB/PC]
18	02200-32025		PIN,COTTER	ﾋﾟﾝ	1	[EXB/PC]
19	224G5-42061		CLIP,RESERVE-TANK	ｸﾘｯﾌﾟ	1	[EXB/PC]
20	01400-00006		NUT	ﾅｯﾄ	1	[EXB/PC]
21	239A5-42381		BOLT	ﾎﾞﾙﾄ	1	[EXB/PC]
A1	224W7-60311		FITTING-ASSY,HOSE	ﾎｰｽﾌｨｯﾃｨﾝｸﾞｱｯｾﾝ	1	[EXB/PC] INC.22,23
22	NO PART NO.	#	FITTING,HOSE	ﾌｨｯﾃｨﾝｸﾞ	1	[EXB/PC]
23	89140-00006		O-RING	Oﾘﾝｸﾞ	1	[EXB/PC]
A2	04150-20202		ELBOW-ASSY	ｴﾙﾎﾞｱｯｾﾝ	1	[EXB/PC] INC.24,25
24	NO PART NO.	#	ELBOW	ｴﾙﾎﾞ	1	[EXB/PC]
25	03320-00110		O-RING	Oﾘﾝｸﾞ	1	[EXB/PC]
26	01100-10030		BOLT	ﾎﾞﾙﾄ	1	[EXB/PC]
27	01402-00010		NUT	ﾅｯﾄ	1	[EXB/PC]
A3	239H5-40501		BRACKET-ASSY,BOOSTER	ﾌﾞﾗｹｯﾄｱｯｾﾝ	1	[EXB/PC] INC.28-35
28	239H5-40541		BRACKET,BOOSTER	ﾌﾞﾗｹｯﾄ	1	[EXB/PC]
A4	239H5-40511		LINK-ASSY	ﾘﾝｸｱｯｾﾝ	1	[EXB/PC] INC.29,30
29	239H5-42101		LINK	ﾘﾝｸ	1	[EXB/PC]
30	256C7-42281		BUSHING	ﾌﾞｯｼﾝｸﾞ	2	[EXB/PC]
31	02000-00016		WASHER	ﾜｯｼｬ	1	[EXB/PC]
32	02200-04025		PIN,COTTER	ﾋﾟﾝ	1	[EXB/PC]
33	239H5-40311		SHAFT	ｼｬﾌﾄ	1	[EXB/PC]
34	239H5-42371		SPACER	ｽﾍﾟｰｻ	1	[EXB/PC]
35	01183-08016		BOLT	ﾎﾞﾙﾄ	1	[EXB/PC]
36	216G7-32011		COLLAR	ｶﾗｰ	4	[EXB/PC]
37	216G6-43241		BOLT	ﾎﾞﾙﾄ	4	[EXB/PC]
38	238F5-42601		RUBBER,MOUNT	ﾗﾊﾞｰ	4	[EXB/PC]
39	22252-32251		WASHER	ﾜｯｼｬ	4	[EXB/PC]
40	214A2-42331		CLIP	ｸﾘｯﾌﾟ	1	[EXB/PC]
A5	239H5-40481		ROD-ASSY	ﾛｯﾄﾞｱｯｾﾝ	1	[EXB/PC] INC.41-45
41	239H5-42011		ROD	ﾛｯﾄﾞ	1	[EXB/PC]
42	239H5-42021		YOKE	ﾖｰｸ	1	[EXB/PC]
43	239H5-42031		YOKE	ﾖｰｸ	1	[EXB/PC]
44	01407-00008		NUT	ﾅｯﾄ	1	[EXB/PC]
45	01402-00008		NUT	ﾅｯﾄ	1	[EXB/PC]

FIG.147 FOOT PEDAL CYLINDER (CLUTCH):[EXB/PC]

(F50254J0) ﾌｯﾄﾍﾟﾀﾞﾙｼﾘﾝﾀﾞ

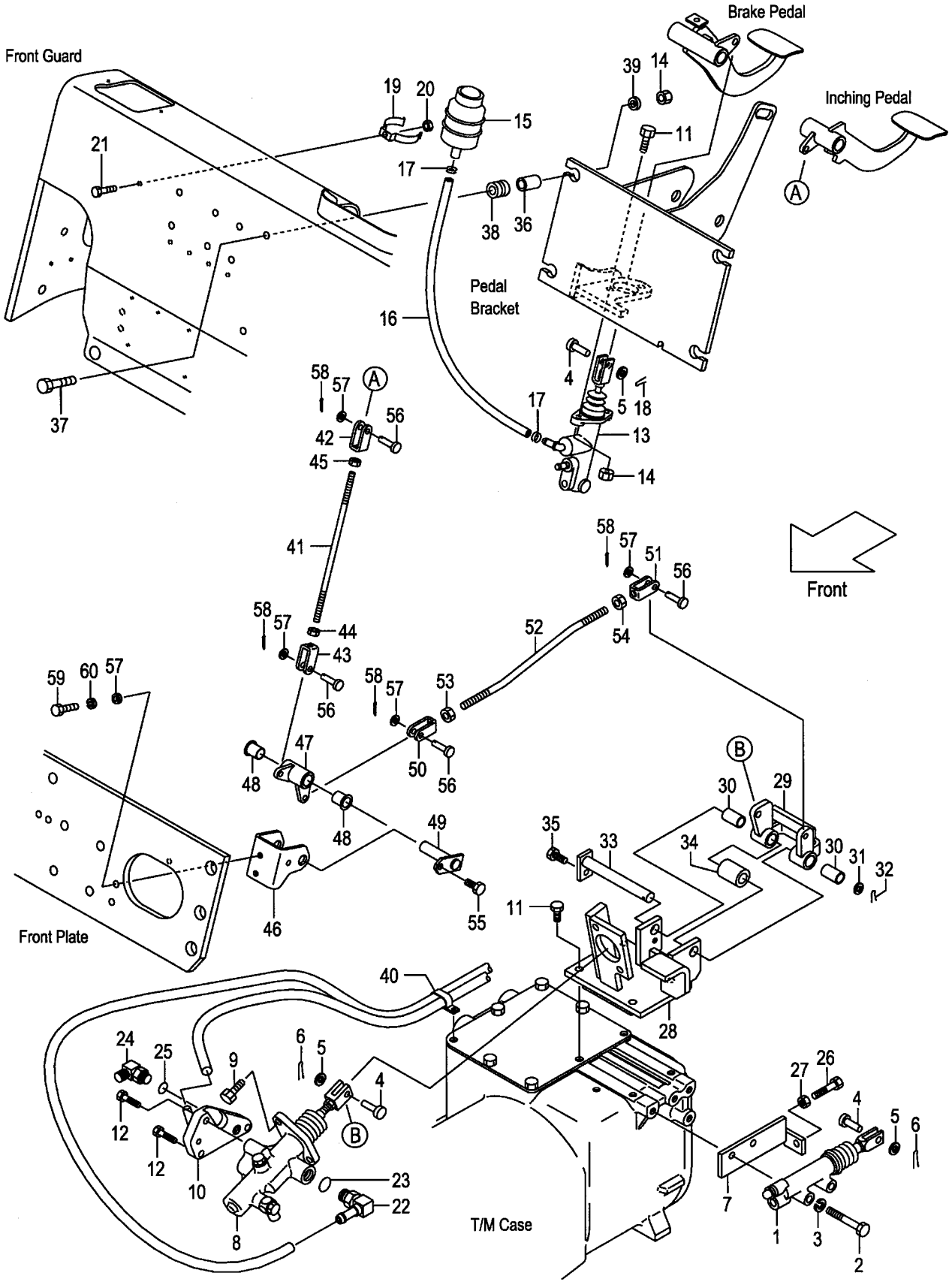

A:FG20C6 FG25C6
B:FD20C6 FD25C6

Item No	Part No.	Mark	Description		Req'd	Remarks : Serial No.
46	239H5-42121		BRACKET	ﾌﾞﾗｹｯﾄ	1	[EXB/PC]
A6	239H5-40601		ARM-ASSY,LINK	ｱｰﾑｱｯｾﾝ	1	[EXB/PC] INC.47,48
47	239H5-40611		ARM,LINK	ｱｰﾑ	1	[EXB/PC]
48	239B5-42221		BUSHING	ﾌﾞｯｼﾝｸﾞ	2	[EXB/PC]
49	239H5-40521		SHAFT	ｼｬﾌﾄ	1	[EXB/PC]
A7	239H5-40451		ROD-ASSY	ﾛｯﾄﾞｱｯｾﾝ	1	[EXB/PC] INC.50-54
50	239H5-42151		YOKE,A	ﾖｰｸ	1	[EXB/PC]
51	239H5-42161		YOKE,B	ﾖｰｸ	1	[EXB/PC]
52	239H5-42171		ROD	ﾛｯﾄﾞ	1	[EXB/PC]
53	01402-00008		NUT	ﾅｯﾄ	1	[EXB/PC]
54	01407-00008		NUT	ﾅｯﾄ	1	[EXB/PC]
55	01186-08016		BOLT	ﾎﾞﾙﾄ	1	[EXB/PC]
56	02262-08030		PIN,CLEVIS	ﾋﾟﾝ	4	[EXB/PC]
57	02000-00008		WASHER	ﾜｯｼｬ	6	[EXB/PC]
58	02200-02020		PIN,COTTER	ﾋﾟﾝ	4	[EXB/PC]
59	01214-08020		BOLT	ﾎﾞﾙﾄ	2	[EXB/PC]
60	02010-00008		WASHER	ﾜｯｼｬ	2	[EXB/PC]

FIG.148 BRAKE PIPE (CLUTCH)

(F5025430) ﾌﾞﾚｰｷﾊﾟｲﾌﾟ

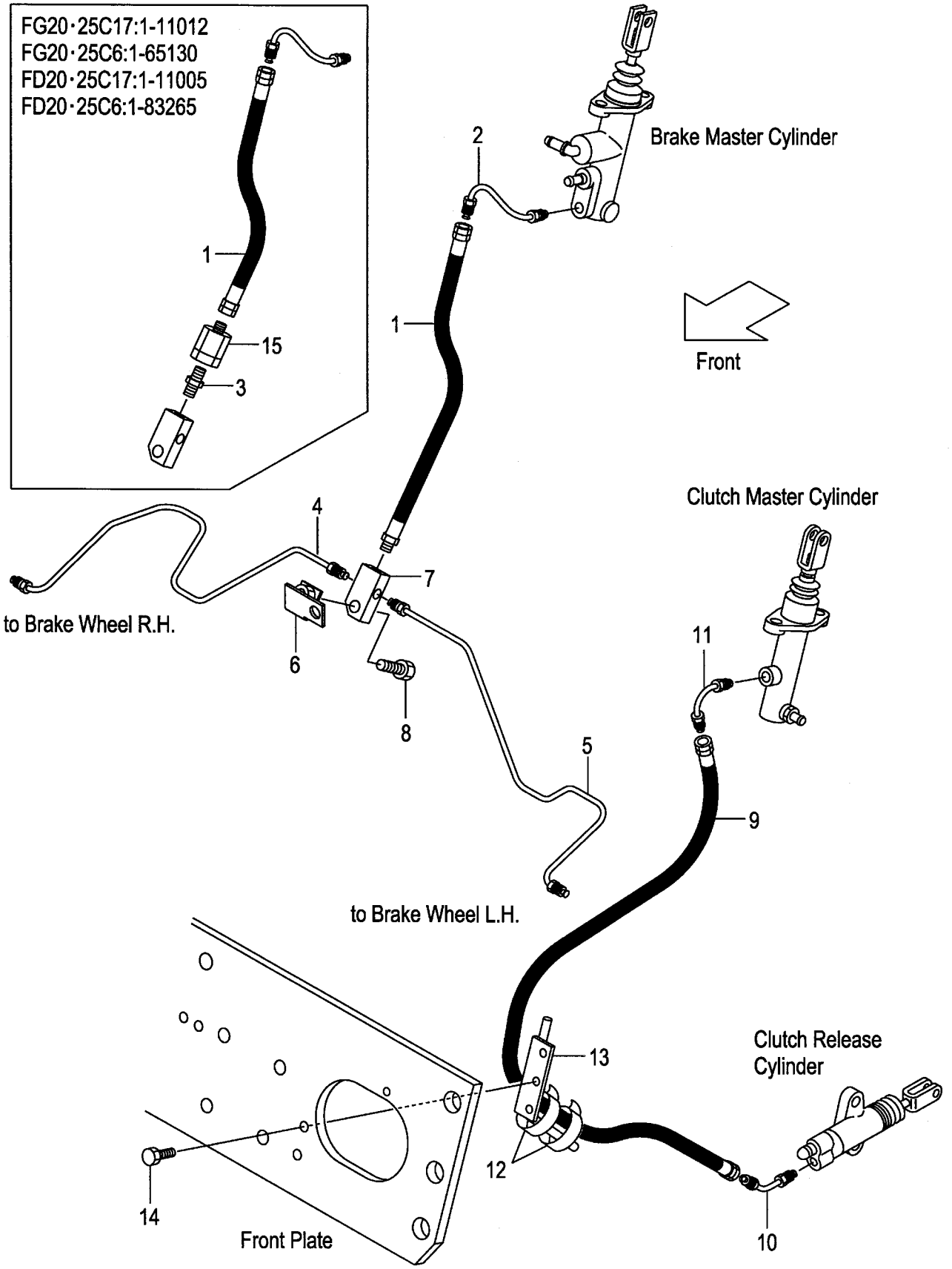

A:FG20C17 FG25C17 C:FD20C17 FD25C17
B:FG20C6 FG25C6 D:FD20C6 FD25C6

Item No	Part No.	Mark	Description		Req'd	Remarks : Serial No.
1	239A5-42491		HOSE,BRAKE	ﾎｰｽ	1	A:1-11004 B:1-65037 C:1-11002 D:1-83104
-	218G5-42011		HOSE,BRAKE	ﾎｰｽ	1	A:11005-11012 B:65038-65130 C:11003-11005 D:83105-83265
-	239A5-42071		HOSE,BRAKE	ﾎｰｽ	1	A:11013- B:65131- C:11006- D:83266-
2	238F5-42421		PIPE,BRAKE-MASTER	ﾊﾟｲﾌﾟ	1	
3	239A5-42441		ADAPTER	ｱﾀﾞﾌﾟﾀ	1	A:1-11012 B:1-65130 C:1-11005 D:1-83265
4	239B5-42601		PIPE,BRAKE,RH	ﾊﾟｲﾌﾟ	1	
5	239B5-42621		PIPE,BRAKE,LH	ﾊﾟｲﾌﾟ	1	
6	239B5-42421		BRACKET,THREE-WAY	ﾌﾞﾗｹｯﾄ	1	
7	23455-42021		THREE-WAY	ｽﾘｰｳｴｲ	1	
8	01184-10030		BOLT	ﾎﾞﾙﾄ	1	
9	239A5-42451		HOSE,CLUTCH	ﾎｰｽ	1	
10	239A5-42461		PIPE,CLUTCH-RELEASE	ﾊﾟｲﾌﾟ	1	
11	239A5-42471		PIPE,CLUTCH-MASTER	ﾊﾟｲﾌﾟ	1	
12	04913-11200		BAND	ﾊﾞﾝﾄﾞ	2	
13	239A5-42351		GUIDE,CABLE	ｶﾞｲﾄﾞ	1	(WITHOUT EXC,EXE,EXK,EXN,OBT)
14	216H3-92291		BOLT	ﾎﾞﾙﾄ	2	(WITHOUT EXC,EXE,EXK,EXN,OBT)
15	239B5-42701		VALVE,CHECK	ﾊﾞﾙﾌﾞ	1	A:1-11012 B:1-65130 C:1-11005 D:1-83265

FIG.149 BRAKE PIPE (CLUTCH):[PC]

(F5025470) ﾌﾞﾚｰｷﾊﾟｲﾌﾟ

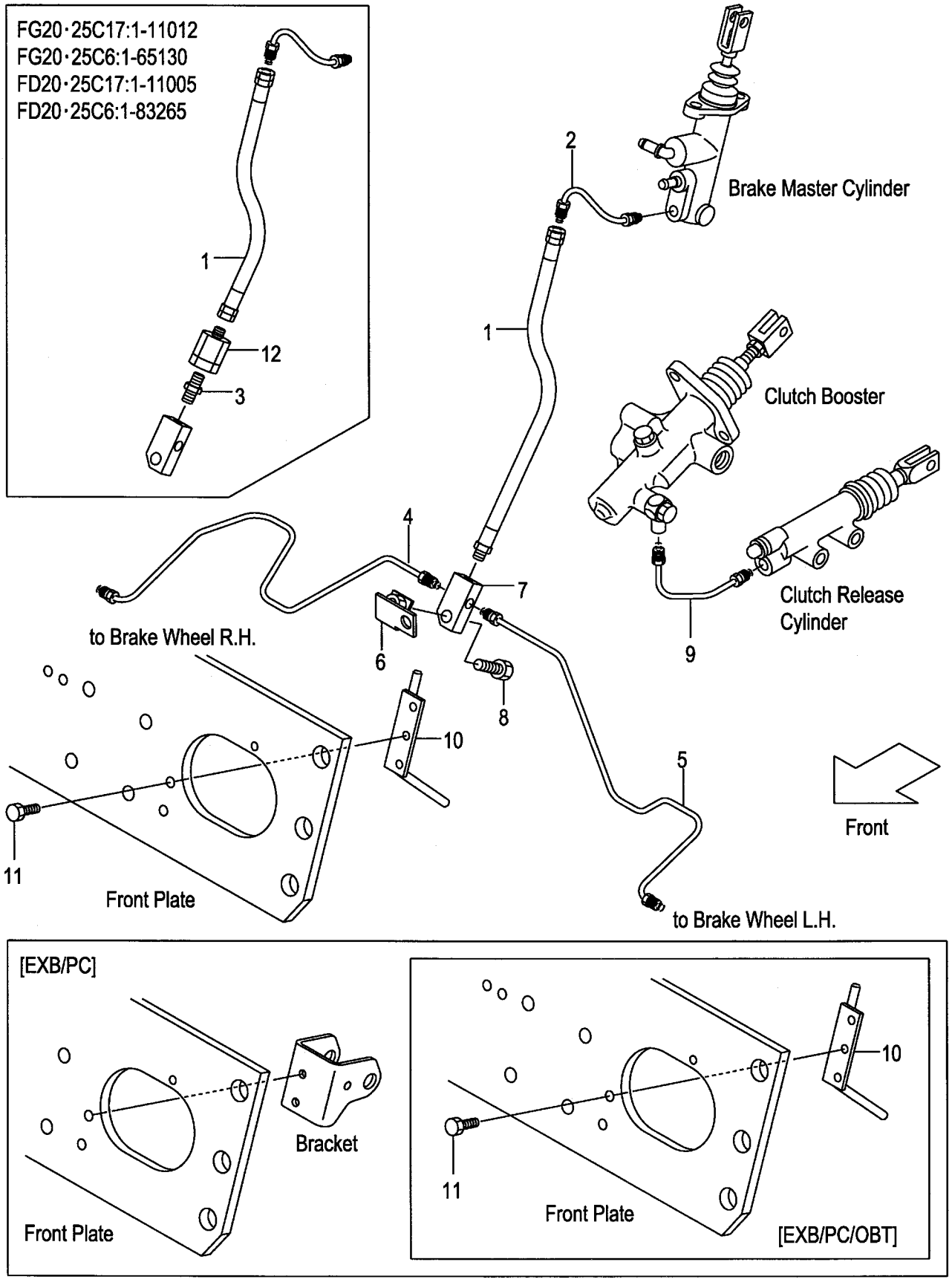

A:FG20C17 FG25C17 C:FD20C17 FD25C17
B:FG20C6 FG25C6 D:FD20C6 FD25C6

Item No	Part No.	Mark	Description		Req'd	Remarks : Serial No.
1	218G5-42011		HOSE,BRAKE	ﾎｰｽ	1	A:1-11012 B:1-65130 C:1-11005 D:1-83265 [PC]
-	239A5-42071		HOSE,BRAKE	ﾎｰｽ	1	A:11013- B:65131- C:11006- D:83266- [PC]
2	218G5-42021		PIPE,BRAKE-MASTER	ﾊﾟｲﾌﾟ	1	A:1-11027 B:1-65658 C:1-11011 D:1-84368 [PC]
-	238F5-42421		PIPE,BRAKE-MASTER	ﾊﾟｲﾌﾟ	1	A:11028- B:65659- C:11012- D:84369- [PC]
3	239A5-42441		ADAPTER	ｱﾀﾞﾌﾟﾀ	1	A:1-11012 B:1-65130 C:1-11005 D:1-83265 [PC]
4	239B5-42601		PIPE,BRAKE,RH	ﾊﾟｲﾌﾟ	1	[PC]
5	239B5-42621		PIPE,BRAKE,LH	ﾊﾟｲﾌﾟ	1	[PC]
6	239B5-42421		BRACKET,THREE-WAY	ﾌﾞﾗｹｯﾄ	1	[PC]
7	23455-42021		THREE-WAY	ｽﾘｰｳｴｲ	1	[PC]
8	01184-10030		BOLT	ﾎﾞﾙﾄ	1	[PC]
9	239H5-42381		PIPE,RELEASE-CYL	ﾊﾟｲﾌﾟ	1	[PC]
10	239A5-42351		GUIDE,CABLE	ｶﾞｲﾄﾞ	1	[PC](WITHOUT EXB/PC)
-	239A5-42351		GUIDE,CABLE	ｶﾞｲﾄﾞ	1	[EXB/PC/OBT]
11	216H3-92291		BOLT	ﾎﾞﾙﾄ	2	[PC](WITHOUT EXB/PC)
-	216H3-92291		BOLT	ﾎﾞﾙﾄ	2	[EXB/PC/OBT]
12	239B5-42701		VALVE,CHECK	ﾊﾞﾙﾌﾞ	1	A:1-11012 B:1-65130 C:1-11005 D:1-83265 [PC]

FIG.150 BRAKE PIPE (TOR-CON)

(F50254D0) ﾌﾞﾚｰｷﾊﾟｲﾌﾟ

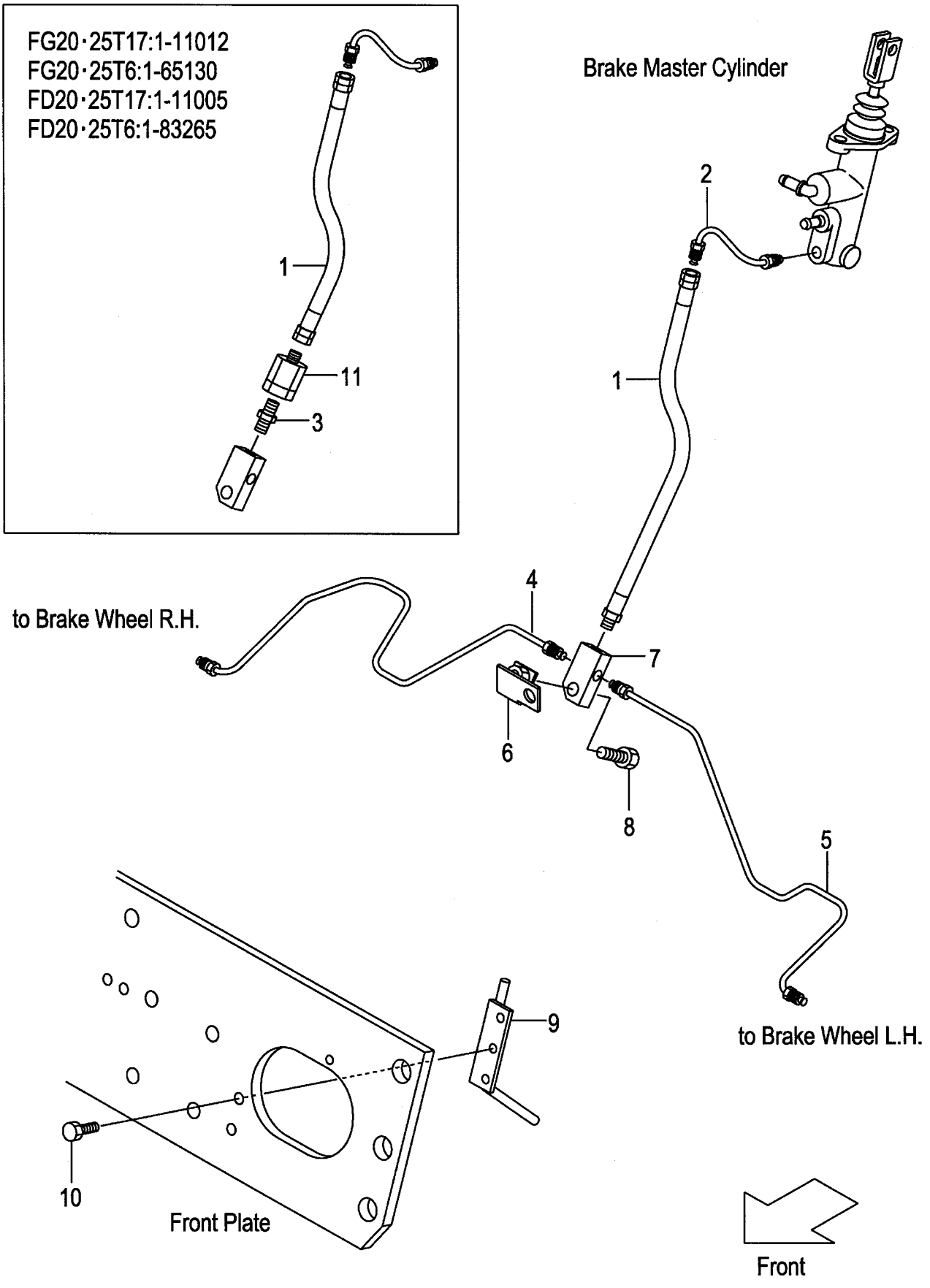

A:FG20T17 FG25T17 C:FD20T17 FD25T17
B:FG20T6 FG25T6 D:FD20T6 FD25T6

Item No	Part No.	Mark	Description		Req'd	Remarks : Serial No.
1	239A5-42491		HOSE,BRAKE	ﾎｰｽ	1	A:1-11004 B:1-65037 C:1-11002 D:1-83104
-	218G5-42011		HOSE,BRAKE	ﾎｰｽ	1	A:11005-11012 B:65038-65130 C:11003-11005 D:83105-83265
-	239A5-42071		HOSE,BRAKE	ﾎｰｽ	1	A:11013- B:65131- C:11006- D:83266-
2	218G5-42021		PIPE,BRAKE-MASTER	ﾊﾟｲﾌﾟ	1	A:1-11027 B:1-65658 C:1-11011 D:1-84368
-	238F5-42421		PIPE,BRAKE-MASTER	ﾊﾟｲﾌﾟ	1	A:11028- B:65659- C:11012- D:84369-
3	239A5-42441		ADAPTER	ｱﾀﾞﾌﾟﾀ	1	A:1-11012 B:1-65130 C:1-11005 D:1-83265
4	239B5-42601		PIPE,BRAKE,RH	ﾊﾟｲﾌﾟ	1	
5	239B5-42621		PIPE,BRAKE,LH	ﾊﾟｲﾌﾟ	1	
6	239B5-42421		BRACKET,THREE-WAY	ﾌﾞﾗｹｯﾄ	1	
7	23455-42021		THREE-WAY	ｽﾘｰｳｴｲ	1	
8	01184-10030		BOLT	ﾎﾞﾙﾄ	1	
9	239A5-42351		GUIDE,CABLE	ｶﾞｲﾄﾞ	1	(WITHOUT EXC,EXE,EXK,EXN,OBT)
10	216H3-92291		BOLT	ﾎﾞﾙﾄ	2	(WITHOUT EXC,EXE,EXK,EXN,OBT)
11	239B5-42701		VALVE,CHECK	ﾊﾞﾙﾌﾞ	1	A:1-11012 B:1-65130 C:1-11005 D:1-83265

FIG.151 BRAKE PIPE (OIL CLUTCH)

(F50254G0) ﾌﾞﾚｰｷﾊﾟｲﾌﾟ

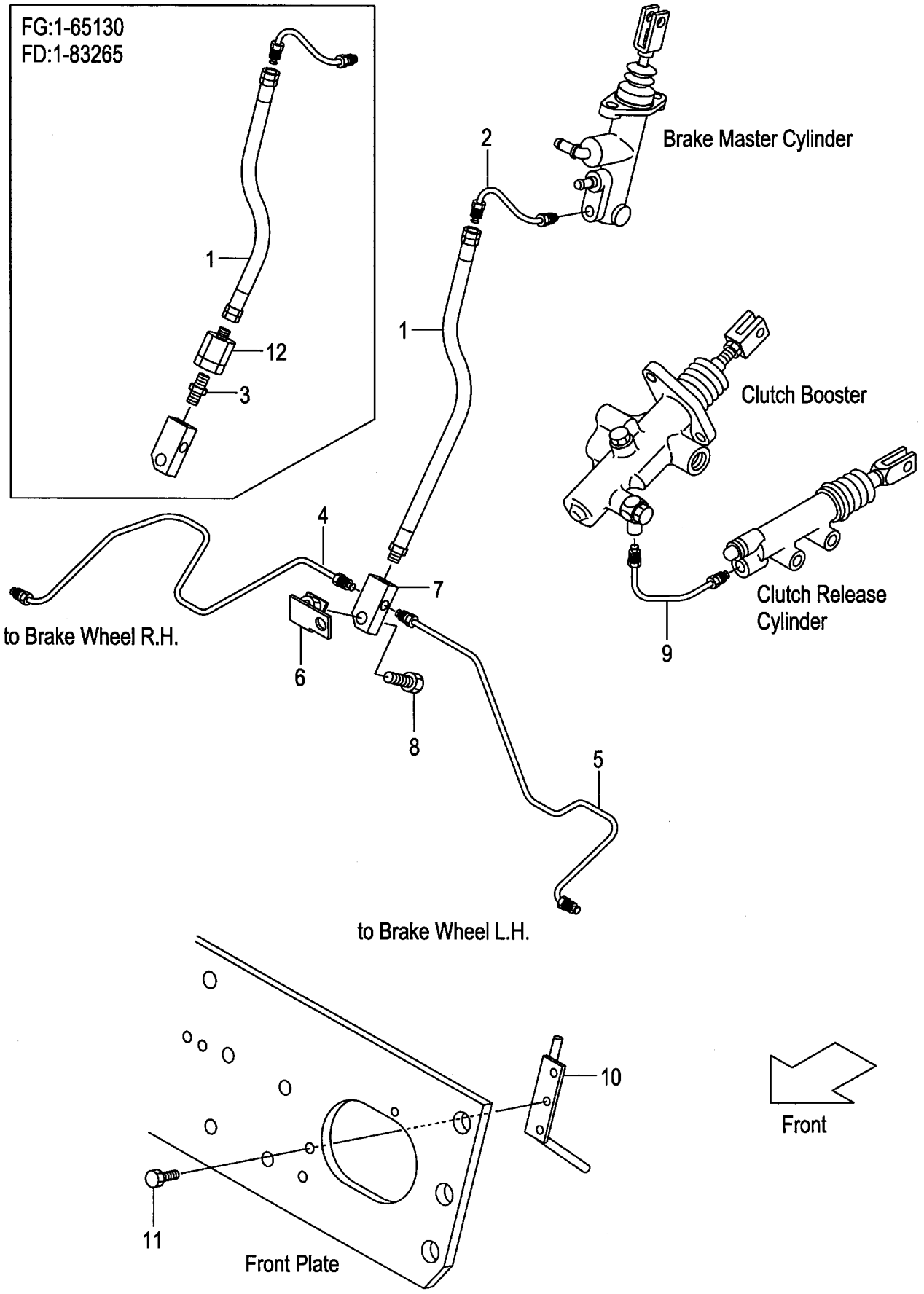

A:FG20W6 FG25W6
B:FD20W6 FD25W6

FIG.151
(F50254G0)

Item No	Part No.	Mark	Description		Req'd	Remarks : Serial No.
1	218G5-42011		HOSE,BRAKE	ﾎｰｽ	1	A:1-65130 B:1-83265
-	239A5-42071		HOSE,BRAKE	ﾎｰｽ	1	A:65131- B:83266-
2	218G5-42021		PIPE,BRAKE-MASTER	ﾊﾟｲﾌﾟ	1	A:1-65658 B:1-84368
-	238F5-42421		PIPE,BRAKE-MASTER	ﾊﾟｲﾌﾟ	1	A:65659- B:84369-
3	239A5-42441		ADAPTER	ｱﾀﾞﾌﾟﾀ	1	A:1-65130 B:1-83265
4	239B5-42601		PIPE,BRAKE,RH	ﾊﾟｲﾌﾟ	1	
5	239B5-42621		PIPE,BRAKE,LH	ﾊﾟｲﾌﾟ	1	
6	239B5-42421		BRACKET,THREE-WAY	ﾌﾞﾗｹｯﾄ	1	
7	23455-42021		THREE-WAY	ｽﾘｰｳｴｲ	1	
8	01184-10030		BOLT	ﾎﾞﾙﾄ	1	
9	239H5-42381		PIPE,RELEASE-CYL	ﾊﾟｲﾌﾟ	1	
10	239A5-42351		GUIDE,CABLE	ｶﾞｲﾄﾞ	1	
11	216H3-92291		BOLT	ﾎﾞﾙﾄ	2	
12	239B5-42701		VALVE,CHECK	ﾊﾞﾙﾌﾞ	1	A:1-65130 B:1-83265

FIG.152 FOOT PEDAL COVER

(F5025440) ﾌｯﾄﾍﾟﾀﾞﾙｶﾊﾞｰ

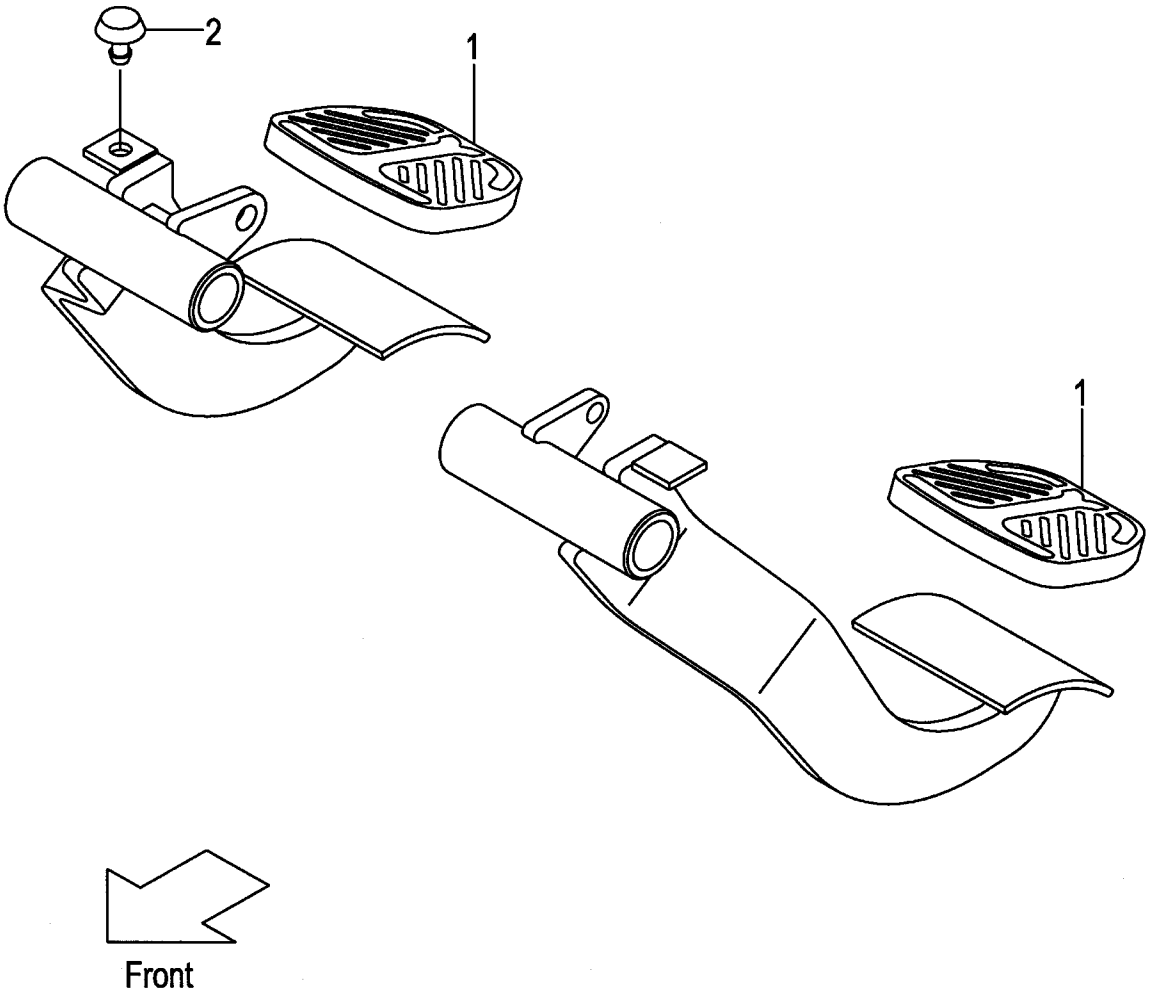

A:FG20C17 FG25C17 D:FG20T6 FG25T6 G:FD20T17 FD25T17 K:FD20W6 FD25W6
B:FG20T17 FG25T17 E:FG20W6 FG25W6 H:FD20C6 FD25C6
C:FG20C6 FG25C6 F:FD20C17 FD25C17 J:FD20T6 FD25T6

FIG.152
(F5025440)

Item No	Part No.	Mark	Description	Req'd	Remarks : Serial No.
1	239A5-42301		COVER,HEAD カバー	2	
2	23235-40091		RUBBER ラバー	1	

FIG.153 BRAKE MASTER CYLINDER

(F50254E0) ﾌﾞﾚｰｷﾏｽﾀｼﾘﾝﾀﾞ

KIT
K1 901

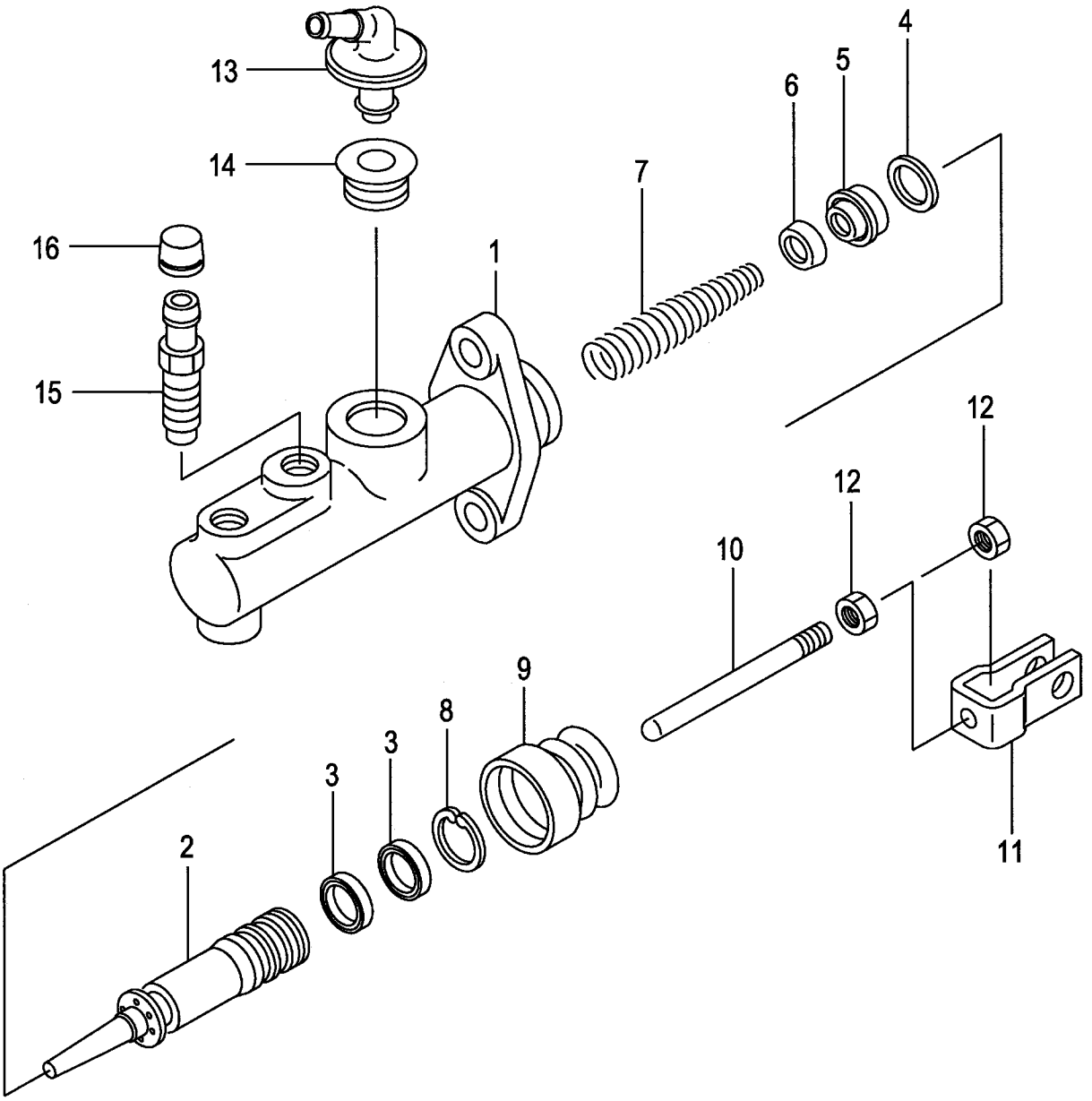

A:FG20C17 FG25C17:1-11012 D:FG20T6 FG25T6:1-65130 G:FD20T17 FD25T17:1-11005 K:FD20W6 FD25W6
B:FG20T17 FG25T17:1-11012 E:FG20W6 FG25W6:1-65130 H:FD20C6 FD25C6:1-83265
C:FG20C6 FG25C6:1-65130 F:FD20C17 FD25C17:1-11005 J:FD20T6 FD25T6:1-83265

FIG.153
(F50254E0)

Item No	Part No.	Mark	Description		Req'd	Remarks : Serial No.
A1	239A5-40101		CYL-ASSY,BRAKE-MASTER	ｼﾘﾝﾀﾞｱｯｾﾝ	1	INC.1-16
901	239A5-40631	K1	KIT,REPAIR	ﾘﾍﾟｱｷｯﾄ	1	INC.2-9,16
1	NO PART NO.	#	BODY,CYL	ﾎﾞﾃﾞｨ	1	
2	239A5-42171	*	PISTON	ﾋﾟｽﾄﾝ	1	
3	239A5-42121	*	CAP,SECONDARY	ｷｬｯﾌﾟ	2	
4	239A5-42101	*	SPACER	ｽﾍﾟｰｻ	1	
5	239A5-42181	*	CAP,PRIMARY	ｷｬｯﾌﾟ	1	
6	239A5-42191	*	THIMBLE	ｼﾝﾌﾞﾙ	1	
7	239A5-42261	*	SPRING	ｽﾌﾟﾘﾝｸﾞ	1	
8	25595-42311	*	RING,SNAP	ｽﾅｯﾌﾟﾘﾝｸﾞ	1	
9	239A5-42221	*	BOOT	ﾌﾞｰﾂ	1	
10	239A5-42271		ROD,PUSH	ﾛｯﾄﾞ	1	
11	239A5-42281		YOKE	ﾖｰｸ	1	
12	239A5-42291		NUT	ﾅｯﾄ	2	
13	25595-42411		UNION,FILLER	ﾕﾆｵﾝ	1	
14	25595-42421		BUSHING	ﾌﾞｯｼﾝｸﾞ	1	
15	239A5-42311		VALVE,BLEEDER	ﾊﾞﾙﾌﾞ	1	
16	239A5-42321	*	CAP,BLEEDER	ｷｬｯﾌﾟ	1	

FIG.153A BRAKE MASTER CYLINDER

(F50254E1) ﾌﾞﾚｰｷﾏｽﾀｼﾘﾝﾀﾞ

KIT

K1 901

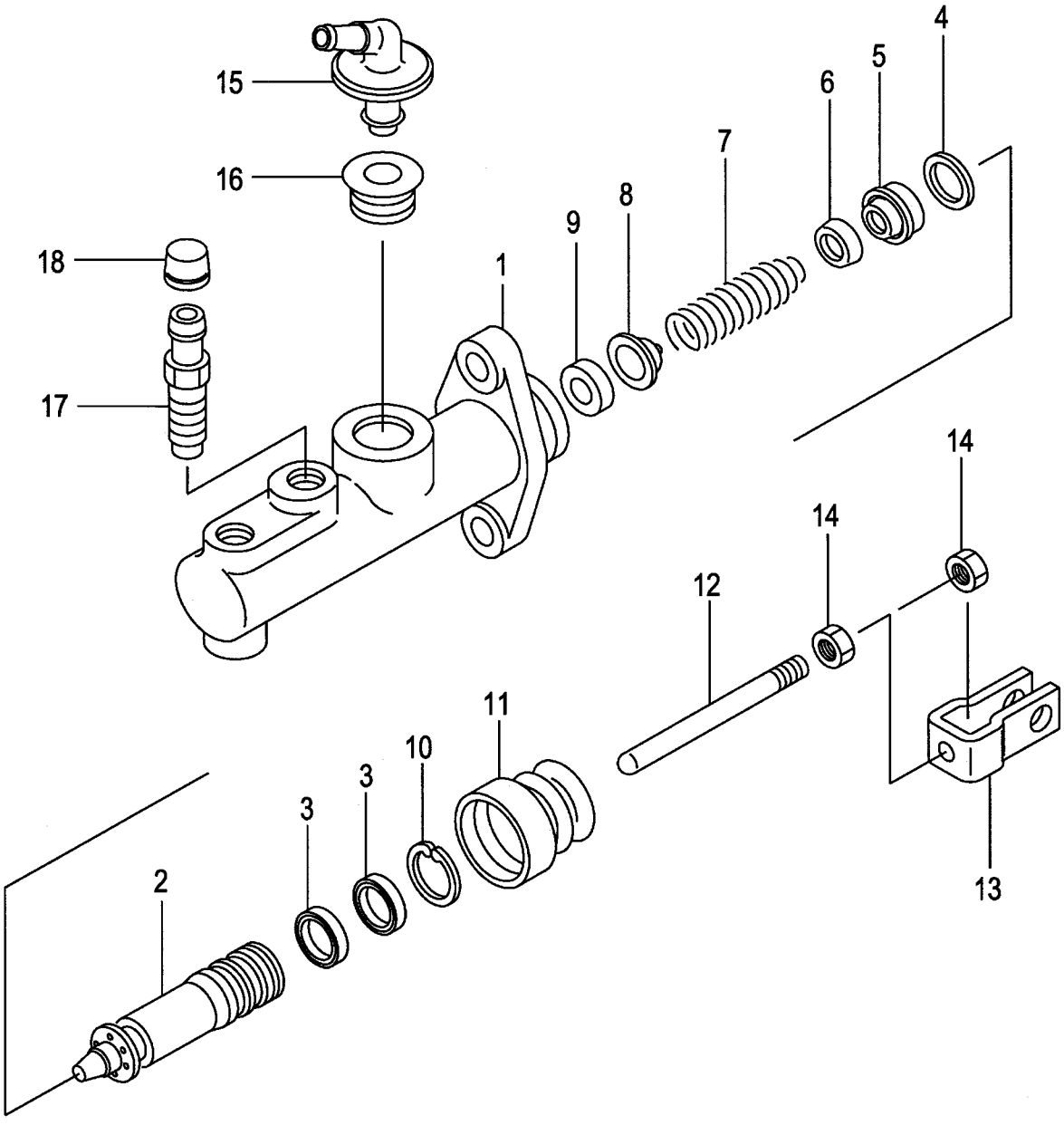

A:FG20C17 FG25C17:11013- D:FG20T6 FG25T6:65131- G:FD20T17 FD25T17:11006- K:FD20W6 FD25W6:83
B:FG20T17 FG25T17:11013- E:FG20W6 FG25W6:65131- H:FD20C6 FD25C6:83266-
C:FG20C6 FG25C6:65131- F:FD20C17 FD25C17:11006- J:FD20T6 FD25T6:83266-

FIG.153A

(F50254E1)

Item No	Part No.	Mark	Description		Req'd	Remarks : Serial No.
A1	239A5-40102		CYL-ASSY,BRAKE-MASTER	ｼﾘﾝﾀﾞｱｯｾﾝ	1	INC.1-18
901	239A5-40641	K1	KIT,REPAIR	ﾘﾍﾟｱｷｯﾄ	1	INC.2-7,10,11,18
1	NO PART NO.	#	BODY,CYL	ﾎﾞﾃﾞｨ	1	
2	239A5-42161	*	PISTON	ﾋﾟｽﾄﾝ	1	
3	239A5-42121	*	CAP,SECONDARY	ｷｬｯﾌﾟ	2	
4	239A5-42101	*	SPACER	ｽﾍﾟｰｻ	1	
5	239A5-42181	*	CAP,PRIMARY	ｷｬｯﾌﾟ	1	
6	239A5-42191	*	THIMBLE	ｼﾝﾌﾞﾙ	1	
7	239A5-42251	*	SPRING	ｽﾌﾟﾘﾝｸﾞ	1	
8	25595-42381		VALVE	ﾊﾞﾙﾌﾞ	1	
9	25595-42391		SEAT,VALVE	ｼｰﾄ	1	
10	25595-42311	*	RING,SNAP	ｽﾅｯﾌﾟﾘﾝｸﾞ	1	
11	239A5-42221	*	BOOT	ﾌﾞｰﾂ	1	
12	239A5-42271		ROD,PUSH	ﾛｯﾄﾞ	1	
13	239A5-42281		YOKE	ﾖｰｸ	1	
14	239A5-42291		NUT	ﾅｯﾄ	2	
15	25595-42411		UNION,FILLER	ﾕﾆｵﾝ	1	
16	25595-42421		BUSHING	ﾌﾞｯｼﾝｸﾞ	1	
17	239A5-42311		VALVE,BLEEDER	ﾊﾞﾙﾌﾞ	1	
18	239A5-42321	*	CAP,BLEEDER	ｷｬｯﾌﾟ	1	

CLUTCH RELEASE CYLINDER
FIG.154 (OIL CLUTCH)(CLUTCH):[PC]
(F50254K0) クラッチリリースシリンダ

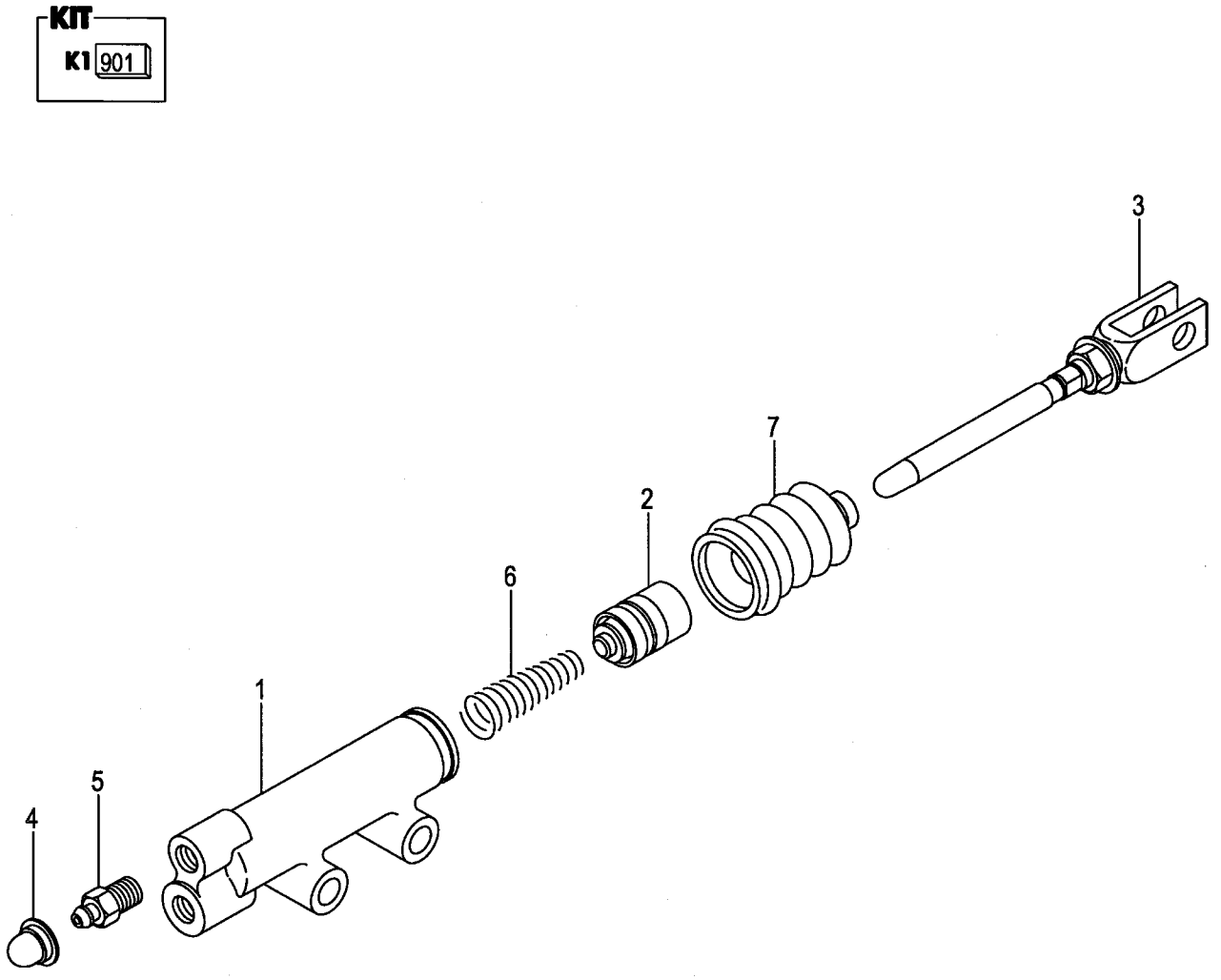

A:FG20C17 FG25C17 D:FD20C17 FD25C17
B:FG20C6 FG25C6 E:FD20C6 FD25C6
C:FG20W6 FG25W6 F:FD20W6 FD25W6

FIG.154
(F50254K0)

Item No	Part No.	Mark	Description		Req'd	Remarks : Serial No.
A1	522A2-10401		CYL-ASSY,RELEASE	ﾘﾘｰｽｼﾘﾝﾀﾞｱｯｾﾝ	1	C,F INC.1-7
-	522A2-10401		CYL-ASSY,RELEASE	ﾘﾘｰｽｼﾘﾝﾀﾞｱｯｾﾝ	1	A,B,D,E [PC] INC.1-7
901	522A2-11601	K1	KIT,OVERHAUL	ｵｰﾊﾞﾎｰﾙｷｯﾄ	1	C,F INC.2,4,6,7
-	522A2-11601	K1	KIT,OVERHAUL	ｵｰﾊﾞﾎｰﾙｷｯﾄ	1	A,B,D,E [PC] INC.2,4,6,7
1	NO PART NO.	#	BODY,CYL	ﾎﾞﾃﾞｨ	1	C,F
-	NO PART NO.	#	BODY,CYL	ﾎﾞﾃﾞｨ	1	A,B,D,E [PC]
2	522A2-18541	*	PISTON,RELEASE-CYL	ﾋﾟｽﾄﾝ	1	C,F
-	522A2-18541	*	PISTON,RELEASE-CYL	ﾋﾟｽﾄﾝ	1	A,B,D,E [PC]
3	522A2-18551		ROD,PUSH	ﾛｯﾄﾞ	1	C,F
-	522A2-18551		ROD,PUSH	ﾛｯﾄﾞ	1	A,B,D,E [PC]
4	522A2-18561	*	CAP,BLEEDER-PLUG	ｷｬｯﾌﾟ	1	C,F
-	522A2-18561	*	CAP,BLEEDER-PLUG	ｷｬｯﾌﾟ	1	A,B,D,E [PC]
5	522A2-18571		PLUG,BLEEDER	ﾌﾟﾗｸﾞ	1	C,F
-	522A2-18571		PLUG,BLEEDER	ﾌﾟﾗｸﾞ	1	A,B,D,E [PC]
6	522A2-18581	*	SPRING,CONICAL	ｽﾌﾟﾘﾝｸﾞ	1	C,F
-	522A2-18581	*	SPRING,CONICAL	ｽﾌﾟﾘﾝｸﾞ	1	A,B,D,E [PC]
7	522A2-18591	*	BOOT	ﾌﾞｰﾂ	1	C,F
-	522A2-18591	*	BOOT	ﾌﾞｰﾂ	1	A,B,D,E [PC]

FIG.155 CLUTCH BOOSTER (OIL CLUTCH)(CLUTCH):[PC]

(F50254L0) クラッチブースタ

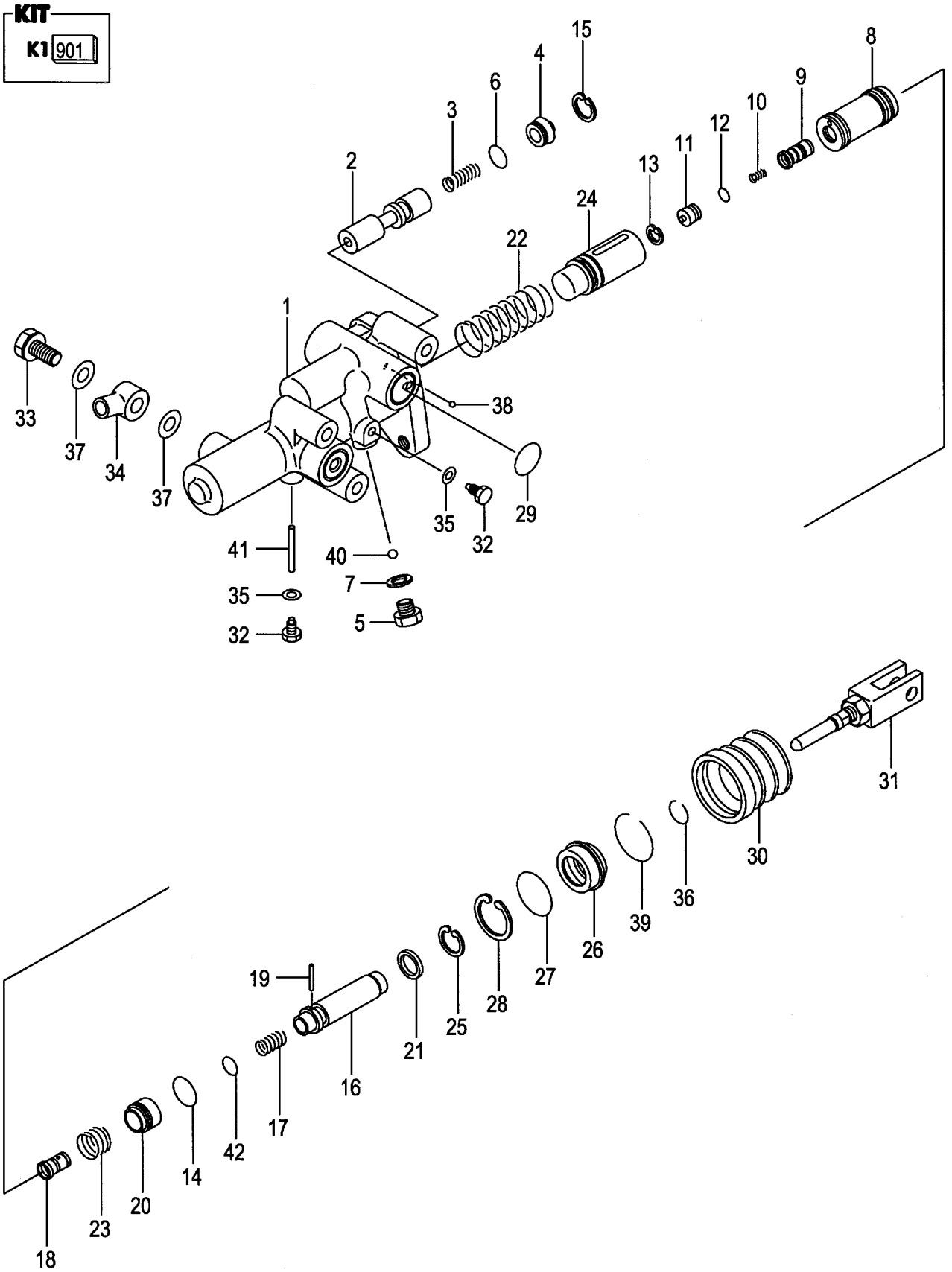

A:FG20C17 FG25C17 D:FD20C17 FD25C17
B:FG20C6 FG25C6 E:FD20C6 FD25C6
C:FG20W6 FG25W6 F:FD20W6 FD25W6

FIG.155
(F50254L0)

Item No	Part No.	Mark	Description		Req'd	Remarks : Serial No.
A1	224W5-30202		BOOSTER-ASSY,CLUTCH	ｸﾗｯﾁﾌﾞｰｽﾀｱｯｾﾝ	1	C,F INC.1-42
-	224W5-30202		BOOSTER-ASSY,CLUTCH	ｸﾗｯﾁﾌﾞｰｽﾀｱｯｾﾝ	1	A,B,D,E [PC] INC.1-42
901	224W5-32501	K1	KIT,OVERHAUL	ｵｰﾊﾞﾎｰﾙｷｯﾄ	1	C,F INC.6-8,12-15,19,24-30,35-42
-	224W5-32501	K1	KIT,OVERHAUL	ｵｰﾊﾞﾎｰﾙｷｯﾄ	1	A,B,D,E [PC] INC.6-8,12-15,19,24-30,35-42
1	NO PART NO.	#	BODY,BOOSTER	ﾎﾞﾃﾞｨ	1	C,F
-	NO PART NO.	#	BODY,BOOSTER	ﾎﾞﾃﾞｨ	1	A,B,D,E [PC]
2	224W5-32511		SPOOL,FLOW-DIVIDER	ｽﾌﾟｰﾙ	1	C,F
-	224W5-32511		SPOOL,FLOW-DIVIDER	ｽﾌﾟｰﾙ	1	A,B,D,E [PC]
3	522A2-18011		SPRING,FLOW-DIVIDER	ｽﾌﾟﾘﾝｸﾞ	1	C,F
-	522A2-18011		SPRING,FLOW-DIVIDER	ｽﾌﾟﾘﾝｸﾞ	1	A,B,D,E [PC]
4	522A2-18021		PLUG	ﾌﾟﾗｸﾞ	1	C,F
-	522A2-18021		PLUG	ﾌﾟﾗｸﾞ	1	A,B,D,E [PC]
5	522A2-18041		PLUG	ﾌﾟﾗｸﾞ	1	C,F
-	522A2-18041		PLUG	ﾌﾟﾗｸﾞ	1	A,B,D,E [PC]
6	522A2-18031	*	O-RING	Oﾘﾝｸﾞ	1	C,F
-	522A2-18031	*	O-RING	Oﾘﾝｸﾞ	1	A,B,D,E [PC]
7	522A2-18051	*	GASKET	ｶﾞｽｹｯﾄ	1	C,F
-	522A2-18051	*	GASKET	ｶﾞｽｹｯﾄ	1	A,B,D,E [PC]
8	224W5-32401	*	PISTON,POWER	ﾋﾟｽﾄﾝ	1	C,F
-	224W5-32401	*	PISTON,POWER	ﾋﾟｽﾄﾝ	1	A,B,D,E [PC]
9	522A2-18071		VALVE,CONTROL	ﾊﾞﾙﾌﾞ	1	C,F
-	522A2-18071		VALVE,CONTROL	ﾊﾞﾙﾌﾞ	1	A,B,D,E [PC]
10	522A2-18081		SPRING,CONTROL-VALVE	ｽﾌﾟﾘﾝｸﾞ	1	C,F
-	522A2-18081		SPRING,CONTROL-VALVE	ｽﾌﾟﾘﾝｸﾞ	1	A,B,D,E [PC]
11	522A2-18091		PLUG,PISTON	ﾌﾟﾗｸﾞ	1	C,F
-	522A2-18091		PLUG,PISTON	ﾌﾟﾗｸﾞ	1	A,B,D,E [PC]
12	522A2-18101	*	O-RING	Oﾘﾝｸﾞ	1	C,F
-	522A2-18101	*	O-RING	Oﾘﾝｸﾞ	1	A,B,D,E [PC]
13	522A2-18111	*	RING,SNAP	ｽﾅｯﾌﾟﾘﾝｸﾞ	1	C,F
-	522A2-18111	*	RING,SNAP	ｽﾅｯﾌﾟﾘﾝｸﾞ	1	A,B,D,E [PC]
14	522A2-18121	*	O-RING	Oﾘﾝｸﾞ	1	C,F

FIG.155 CLUTCH BOOSTER (OIL CLUTCH)(CLUTCH):[PC]

(F50254L0) クラッチブースタ

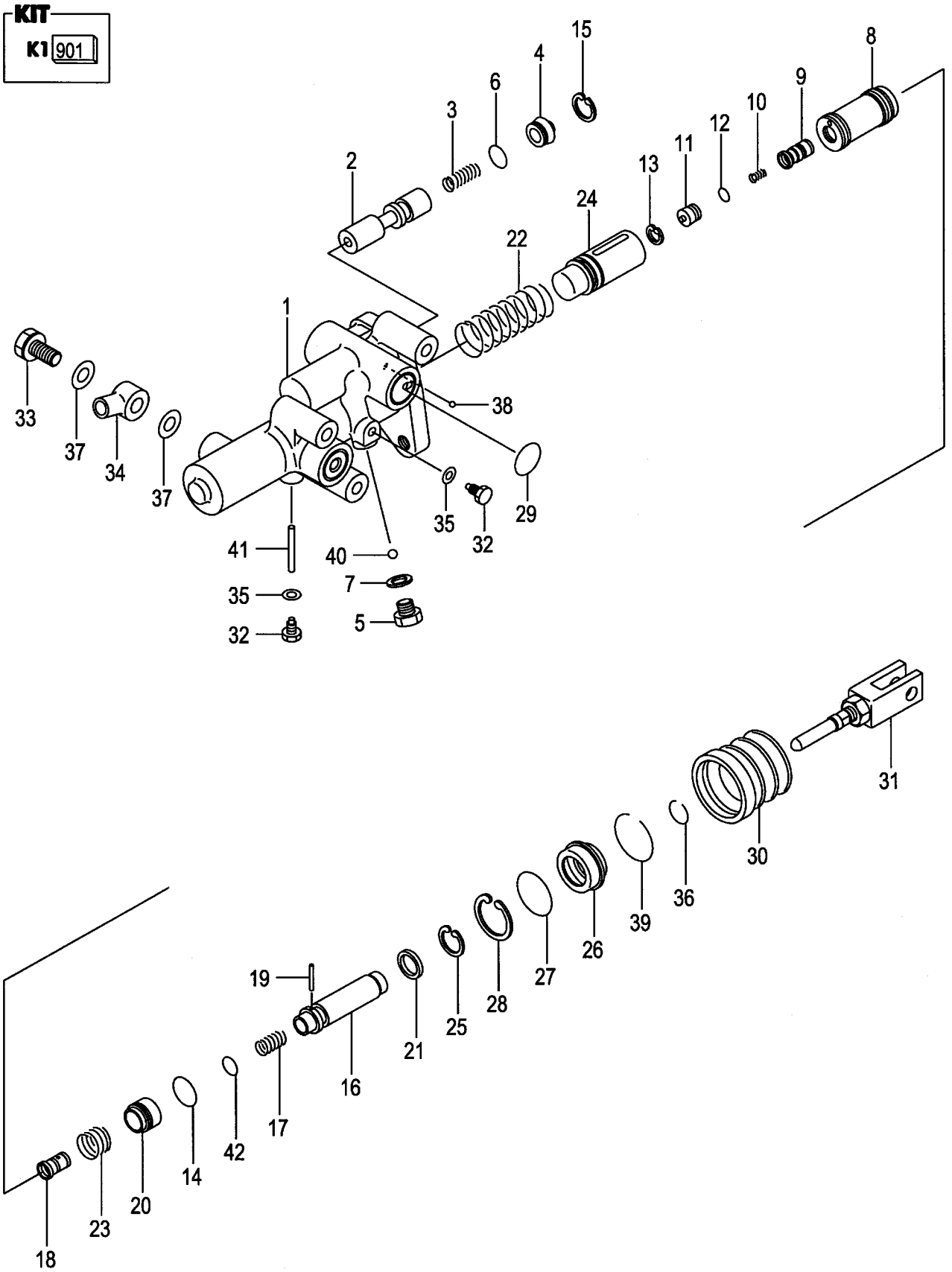

A:FG20C17 FG25C17 D:FD20C17 FD25C17
B:FG20C6 FG25C6 E:FD20C6 FD25C6
C:FG20W6 FG25W6 F:FD20W6 FD25W6

FIG.155
(F50254L0)

Item No	Part No.	Mark	Description		Req'd	Remarks : Serial No.
-	522A2-18121	*	O-RING	Oﾘﾝｸﾞ	1	A,B,D,E
						[PC]
15	522A2-18131	*	RING,SNAP	ｽﾅｯﾌﾟﾘﾝｸﾞ	1	C,F
-	522A2-18131	*	RING,SNAP	ｽﾅｯﾌﾟﾘﾝｸﾞ	1	A,B,D,E
						[PC]
16	224W5-42401		PISTON,REACTION	ﾋﾟｽﾄﾝ	1	C,F
-	224W5-42401		PISTON,REACTION	ﾋﾟｽﾄﾝ	1	A,B,D,E
						[PC]
17	224W5-32421		SPRING,RELIEF-VALVE	ｽﾌﾟﾘﾝｸﾞ	1	C,F
-	224W5-32421		SPRING,RELIEF-VALVE	ｽﾌﾟﾘﾝｸﾞ	1	A,B,D,E
						[PC]
18	522A2-18161		SEAT,CONTROL-VALVE	ｼｰﾄ	1	C,F
-	522A2-18161		SEAT,CONTROL-VALVE	ｼｰﾄ	1	A,B,D,E
						[PC]
19	522A2-18171	*	PIN	ﾋﾟﾝ	1	C,F
-	522A2-18171	*	PIN	ﾋﾟﾝ	1	A,B,D,E
						[PC]
20	224W5-42431		PISTON,REACTION	ﾋﾟｽﾄﾝ	1	C,F
-	224W5-42431		PISTON,REACTION	ﾋﾟｽﾄﾝ	1	A,B,D,E
						[PC]
21	522A2-18201		WASHER	ﾜｯｼｬ	1	C,F
-	522A2-18201		WASHER	ﾜｯｼｬ	1	A,B,D,E
						[PC]
22	224W5-32551		SPRING,RETURN,PISTON	ｽﾌﾟﾘﾝｸﾞ	1	C,F
-	224W5-32551		SPRING,RETURN,PISTON	ｽﾌﾟﾘﾝｸﾞ	1	A,B,D,E
						[PC]
23	522A2-18221		SPRING,RETURN,VALVE	ｽﾌﾟﾘﾝｸﾞ	1	C,F
-	522A2-18221		SPRING,RETURN,VALVE	ｽﾌﾟﾘﾝｸﾞ	1	A,B,D,E
						[PC]
24	224W5-32441	*	PISTON,MASTER-CYL	ﾋﾟｽﾄﾝ	1	C,F
-	224W5-32441	*	PISTON,MASTER-CYL	ﾋﾟｽﾄﾝ	1	A,B,D,E
						[PC]
25	522A2-18211	*	RING,SNAP	ｽﾅｯﾌﾟﾘﾝｸﾞ	1	C,F
-	522A2-18211	*	RING,SNAP	ｽﾅｯﾌﾟﾘﾝｸﾞ	1	A,B,D,E
						[PC]
26	224W5-32521	*	GUIDE,REACTION	ｶﾞｲﾄﾞ	1	C,F
-	224W5-32521	*	GUIDE,REACTION	ｶﾞｲﾄﾞ	1	A,B,D,E
						[PC]
27	224W5-32451	*	O-RING	Oﾘﾝｸﾞ	1	C,F
-	224W5-32451	*	O-RING	Oﾘﾝｸﾞ	1	A,B,D,E
						[PC]
28	224W5-32461	*	RING,SNAP	ｽﾅｯﾌﾟﾘﾝｸﾞ	1	C,F
-	224W5-32461	*	RING,SNAP	ｽﾅｯﾌﾟﾘﾝｸﾞ	1	A,B,D,E
						[PC]
29	522A2-18281	*	O-RING	Oﾘﾝｸﾞ	2	C,F
-	522A2-18281	*	O-RING	Oﾘﾝｸﾞ	2	A,B,D,E
						[PC]
30	224W5-32471	*	BOOT	ﾌﾞｰﾂ	1	C,F
-	224W5-32471	*	BOOT	ﾌﾞｰﾂ	1	A,B,D,E
						[PC]

FIG.155 CLUTCH BOOSTER (OIL CLUTCH)(CLUTCH):[PC]

(F50254L0) クラッチブースタ

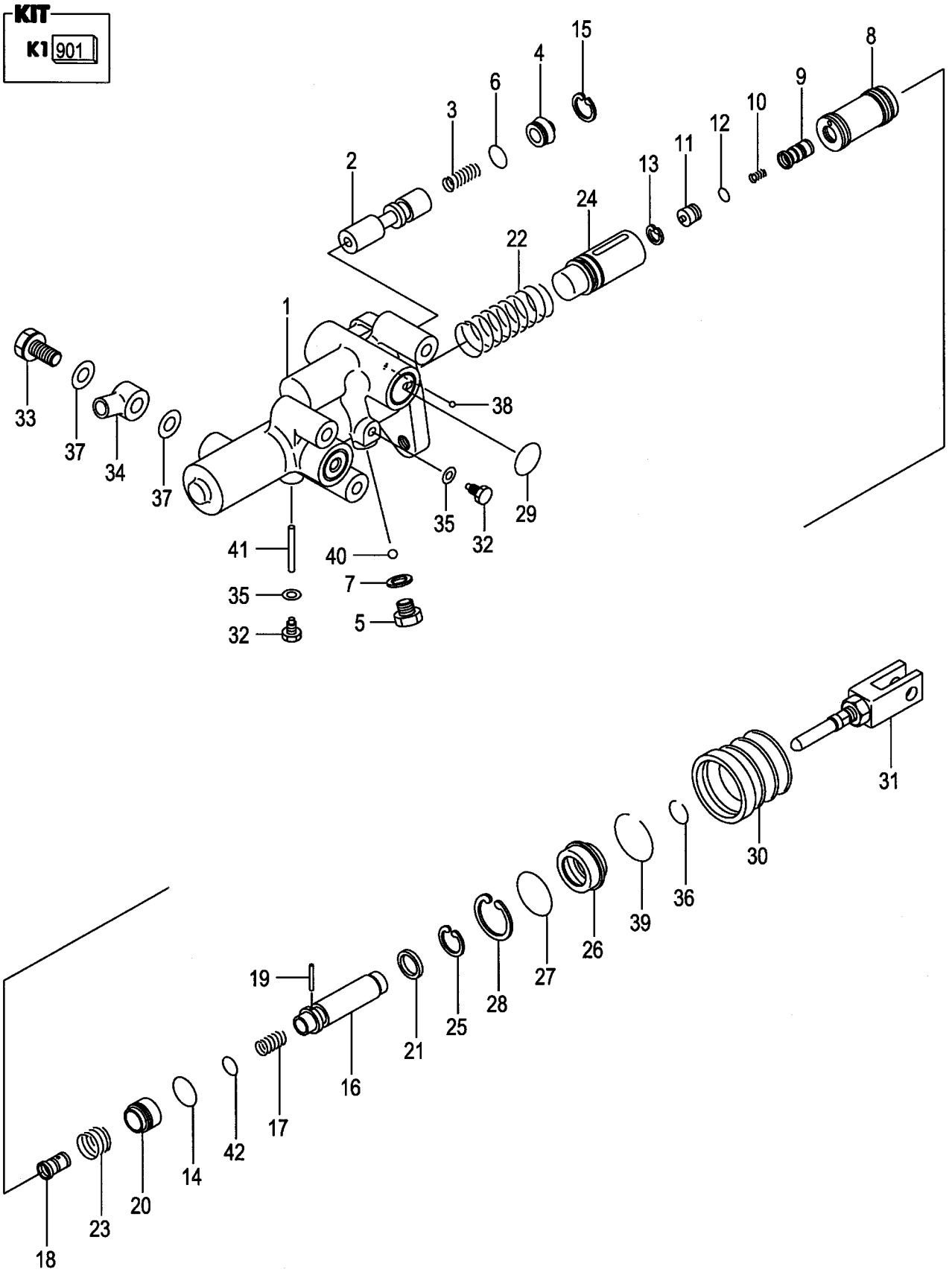

A:FG20C17 FG25C17 D:FD20C17 FD25C17
B:FG20C6 FG25C6 E:FD20C6 FD25C6
C:FG20W6 FG25W6 F:FD20W6 FD25W6

FIG.155
(F50254L0)

Item No	Part No.	Mark	Description		Req'd	Remarks : Serial No.
31	522A2-18301		ROD,PUSH	ﾛｯﾄﾞ	1	C,F
-	522A2-18301		ROD,PUSH	ﾛｯﾄﾞ	1	A,B,D,E
						[PC]
32	522A2-18311		BOLT	ﾎﾞﾙﾄ	2	C,F
-	522A2-18311		BOLT	ﾎﾞﾙﾄ	2	A,B,D,E
						[PC]
33	522A2-18341		BOLT,UNION	ﾎﾞﾙﾄ	1	C,F
-	522A2-18341		BOLT,UNION	ﾎﾞﾙﾄ	1	A,B,D,E
						[PC]
34	522A2-18352		UNION	ﾕﾆｵﾝ	1	C,F
-	522A2-18352		UNION	ﾕﾆｵﾝ	1	A,B,D,E
						[PC]
35	522A2-18321	*	GASKET	ｶﾞｽｹｯﾄ	2	C,F
-	522A2-18321	*	GASKET	ｶﾞｽｹｯﾄ	2	A,B,D,E
						[PC]
36	522A2-18331	*	RING,SNAP	ｽﾅｯﾌﾟﾘﾝｸﾞ	1	C,F
-	522A2-18331	*	RING,SNAP	ｽﾅｯﾌﾟﾘﾝｸﾞ	1	A,B,D,E
						[PC]
37	522A2-18361	*	GASKET	ｶﾞｽｹｯﾄ	2	C,F
-	522A2-18361	*	GASKET	ｶﾞｽｹｯﾄ	2	A,B,D,E
						[PC]
38	522A2-18371	*	BALL	ﾎﾞｰﾙ	1	C,F
-	522A2-18371	*	BALL	ﾎﾞｰﾙ	1	A,B,D,E
						[PC]
39	224W5-32481	*	RING,SNAP	ｽﾅｯﾌﾟﾘﾝｸﾞ	1	C,F
-	224W5-32481	*	RING,SNAP	ｽﾅｯﾌﾟﾘﾝｸﾞ	1	A,B,D,E
						[PC]
40	522A2-18391	*	BALL	ﾎﾞｰﾙ	1	C,F
-	522A2-18391	*	BALL	ﾎﾞｰﾙ	1	A,B,D,E
						[PC]
41	224W5-32491	*	PIN	ﾋﾟﾝ	1	C,F
-	224W5-32491	*	PIN	ﾋﾟﾝ	1	A,B,D,E
						[PC]
42	55952-18021	*	O-RING	Oﾘﾝｸﾞ	1	C,F
-	55952-18021	*	O-RING	Oﾘﾝｸﾞ	1	A,B,D,E
						[PC]

FIG.156 BRAKE LEVER

(F5025510) ﾌﾞﾚｰｷﾚﾊﾞｰ

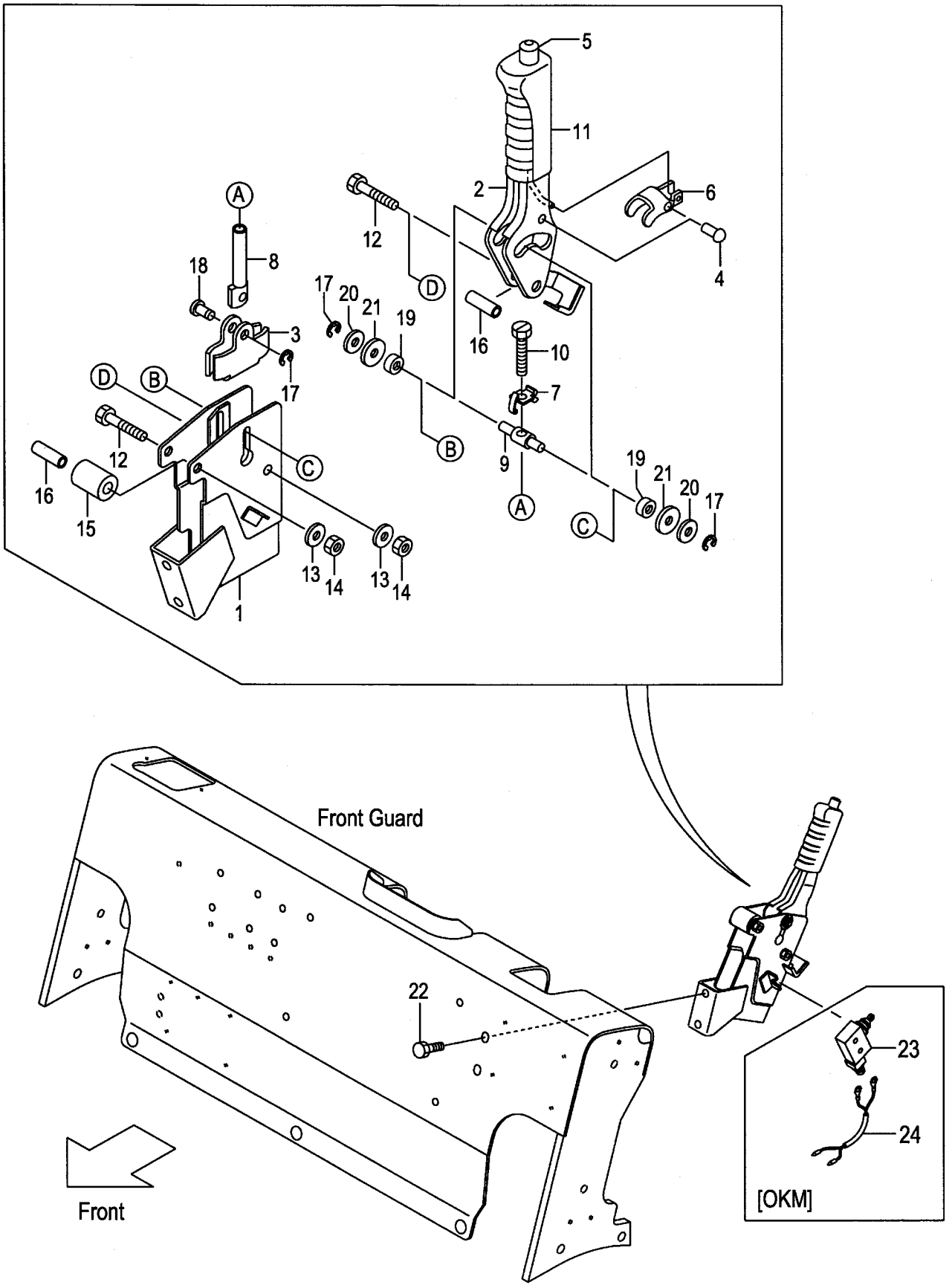

A:FG20C17 FG20T17 FG25C17 FG25T17 C:FD20C17 FD20T17 FD25C17 FD25T17
B:FG20C6 FG20T6 FG25C6 FG25T6 FG20W6 FG25W6 D:FD20C6 FD20T6 FD25C6 FD25T6 FD20W6 FD25W6

Item No	Part No.	Mark	Description		Req'd	Remarks : Serial No.
A1	239A5-50101		LEVER-ASSY,BRAKE	ﾌﾞﾚｰｷﾚﾊﾞｰｱｯｾﾝ	1	INC.1-21
1	NO PART NO.		BRACKET,BRAKE-LEVER	ﾌﾞﾗｹｯﾄ	1	
2	NO PART NO.		LEVER	ﾚﾊﾞｰ	1	
3	27415-52151		BRACKET	ﾌﾞﾗｹｯﾄ	1	
4	230C5-55021		PIN	ﾋﾟﾝ	1	
5	230C5-55031		ROD,RELEASE	ﾛｯﾄﾞ	1	
6	230C5-55041		PLATE,LOCK	ﾌﾟﾚｰﾄ	1	
7	230C5-55051		PLATE,TENSION	ﾌﾟﾚｰﾄ	1	
8	230C5-55061		ROD,ADJUST	ﾛｯﾄﾞ	1	
9	230C5-55071		PIN,TRUNION	ﾋﾟﾝ	1	
10	230C5-55081		BOLT	ﾎﾞﾙﾄ	1	
11	NO PART NO.		GRIP	ｸﾞﾘｯﾌﾟ	1	
12	01100-08050		BOLT	ﾎﾞﾙﾄ	2	
13	02010-00008		WASHER	ﾜｯｼｬ	2	
14	01400-00008		NUT	ﾅｯﾄ	2	
15	222A5-52111		RUBBER,STOPPER	ﾗﾊﾞｰ	1	
16	230C5-55101		COLLAR	ｶﾗｰ	2	
17	214A5-52131		E-RING	Eﾘﾝｸﾞ	3	
18	230C5-55111		PIN	ﾋﾟﾝ	1	
19	230C5-55121		ROLLER,CAM	ﾛｰﾗ	2	
20	214A5-52121		WASHER	ﾜｯｼｬ	2	
21	214A5-52241		WASHER	ﾜｯｼｬ	2	
22	216G6-43231		BOLT	ﾎﾞﾙﾄ	2	
23	27912-62441		SWITCH,MICRO	ｽｲｯﾁ	1	[OKM]
24	535H3-82261		WIRE-HARNESS,SWITCH	ﾜｲﾔﾊｰﾈｽ	1	[OKM]

FIG.157 FRAME

(F5026110) フレーム

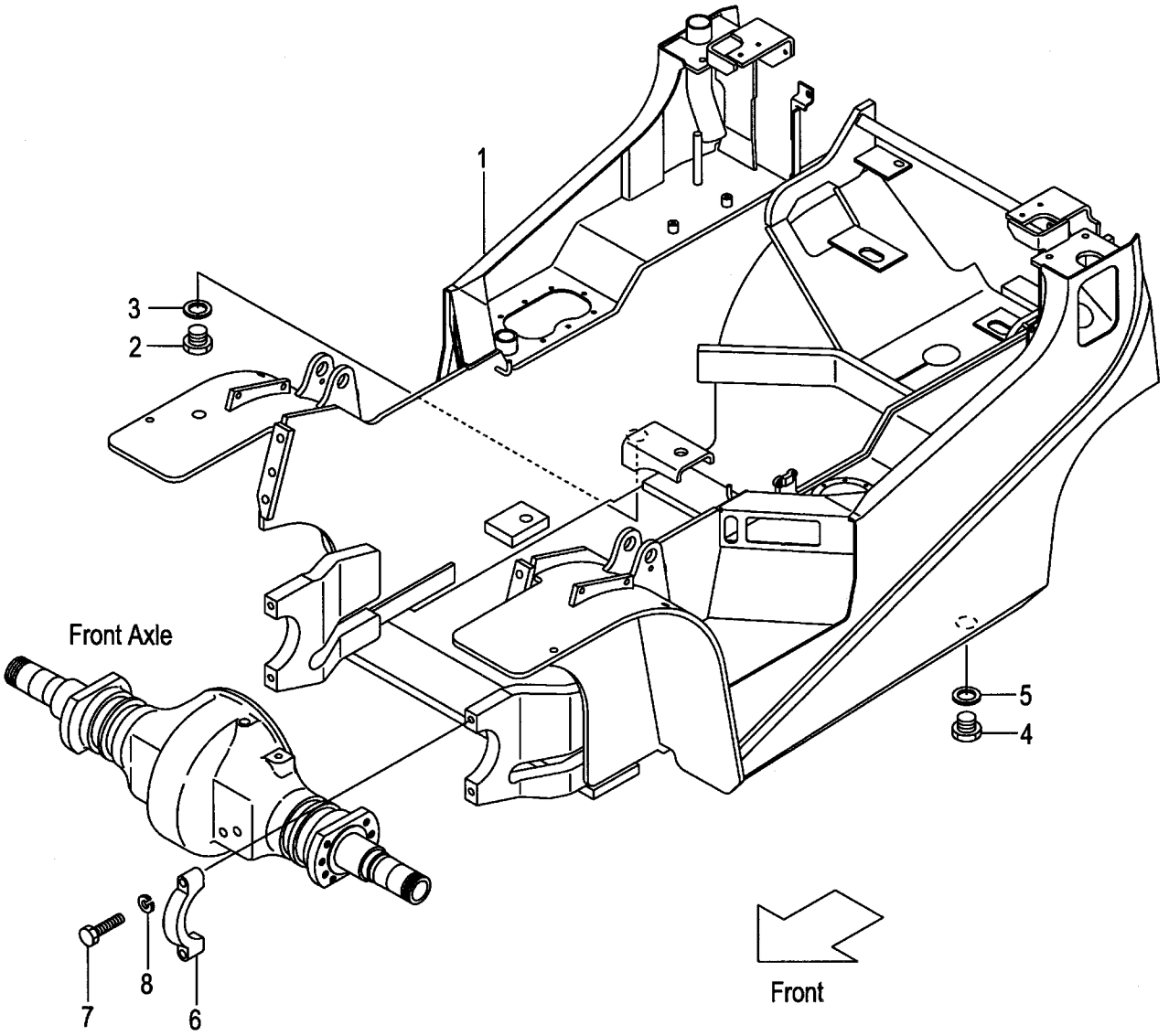

A:FG20C17 FG20T17 FG25C17 FG25T17 D:FD20C17 FD20T17 FD25C17 FD25T17
B:FG20C6 FG20T6 FG25C6 FG25T6 E:FD20C6 FD20T6 FD25C6 FD25T6
C:FG20W6 FG25W6 F:FD20W6 FD25W6

FIG.157
(F5026110)

Item No	Part No.	Mark	Description		Req'd	Remarks : Serial No.
1	NO PART NO.	#	FRAME	ﾌﾚｰﾑ	1	
2	21237-52051		PLUG,DRAIN	ﾌﾟﾗｸﾞ	1	
3	21237-52062		PACKING	ﾊﾟｯｷﾝｸﾞ	1	
4	21237-52051		PLUG,DRAIN	ﾌﾟﾗｸﾞ	1	
5	21237-52062		PACKING	ﾊﾟｯｷﾝｸﾞ	1	
6	277P8-32701		CAP,SUPPORT,F-AXLE	ｷｬｯﾌﾟ	2	
7	01100-16065		BOLT	ﾎﾞﾙﾄ	4	
8	02010-00016		WASHER	ﾜｯｼｬ	4	

FIG.158 OIL TANK (CLUTCH)(TOR-CON)

(F50261A0) オイルタンク

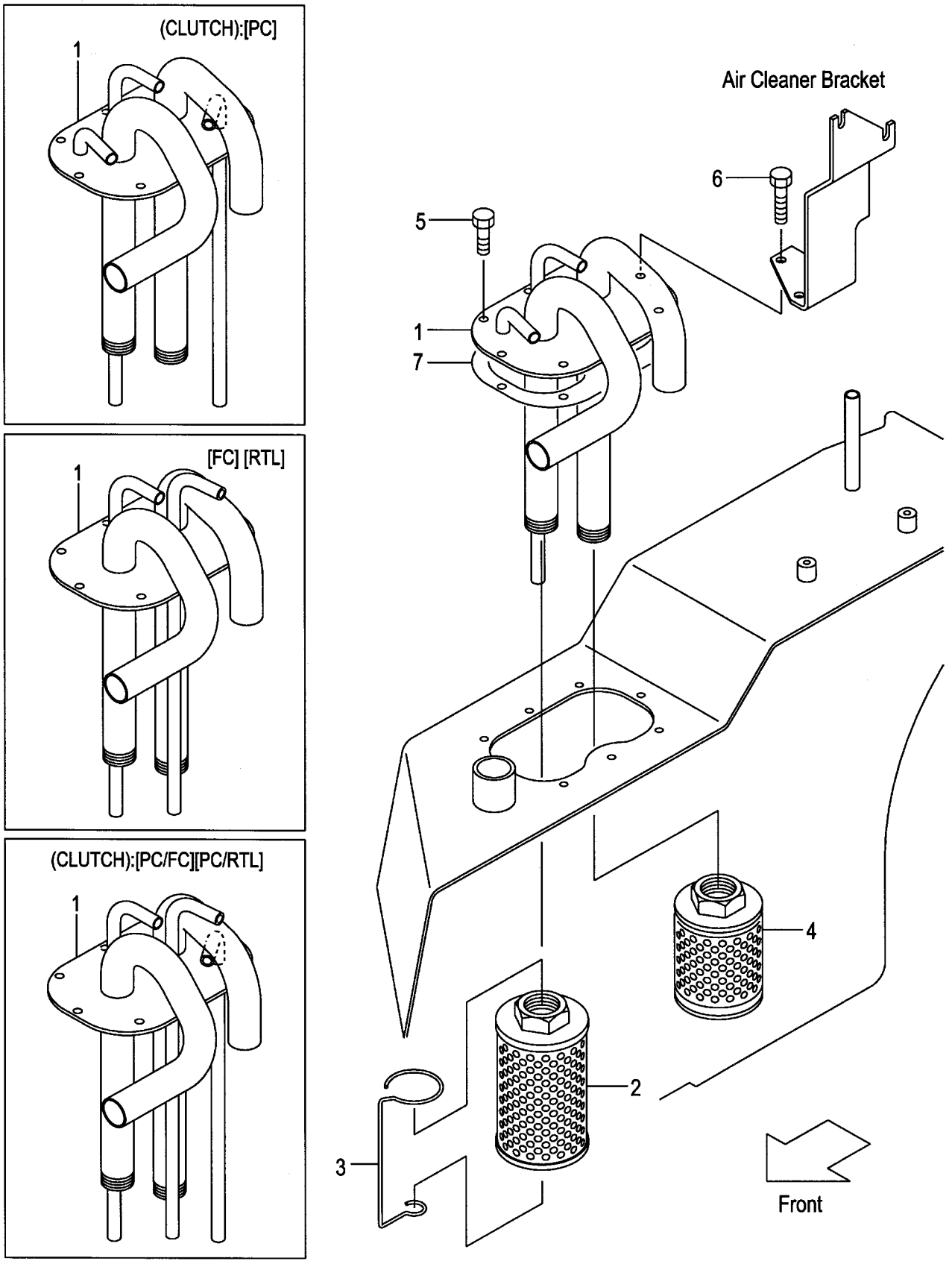

A:FG20C17 FG25C17 D:FG20T6 FG25T6 G:FD20C6 FD25C6
B:FG20T17 FG25T17 E:FD20C17 FD25C17 H:FD20T6 FD25T6
C:FG20C6 FG25C6 F:FD20T17 FD25T17

FIG.158
(F50261A0)

Item No	Part No.	Mark	Description		Req'd	Remarks : Serial No.
1	239A7-52001		PIPE,SUCTION	ﾊﾟｲﾌﾟ	1	
-	239H7-52001		PIPE,SUCTION	ﾊﾟｲﾌﾟ	1	A,C,E,G [PC]
-	539G3-72001		PIPE,SUCTION	ﾊﾟｲﾌﾟ	1	[FC][RTL]
-	538S3-72001		PIPE,SUCTION	ﾊﾟｲﾌﾟ	1	A,C,E,G [PC/FC][PC/RTL]
A1	271A7-52301		FILTER-ASSY,RETURN	ﾌｨﾙﾀｱｯｾﾝ	1	A,B:1-11039 C,D:1-66000 E,F:1-11015 G,H:1-85134 INC.2,3
-	271A7-52301		FILTER-ASSY,RETURN	ﾌｨﾙﾀｱｯｾﾝ	1	A,B:11040- C,D:66001- E,F:11016- G,H:85135- INC.2,3
2	214A7-52081		FILTER,RETURN	ﾌｨﾙﾀ	1	A,B:1-11039 C,D:1-66000 E,F:1-11015 G,H:1-85134
-	NO PART NO.	#	FILTER,RETURN	ﾌｨﾙﾀ	1	A,B:11040- C,D:66001- E,F:11016- G,H:85135-
3	NO PART NO.	#	WIRE	ﾜｲﾔ	1	A,B:1-11039 C,D:1-66000 E,F:1-11015 G,H:1-85134
-	NO PART NO.	#	WIRE	ﾜｲﾔ	1	A,B:11040- C,D:66001- E,F:11016- G,H:85135-
4	216G7-52051		FILTER,SUCTION	ﾌｨﾙﾀ	1	
5	229F2-22151		BOLT	ﾎﾞﾙﾄ	6	
6	229F2-22161		BOLT	ﾎﾞﾙﾄ	2	
7	216G2-22202		PACKING	ﾊﾟｯｷﾝｸﾞ	1	

FIG.159 OIL TANK (OIL CLUTCH)

(F50261B0) オイルタンク

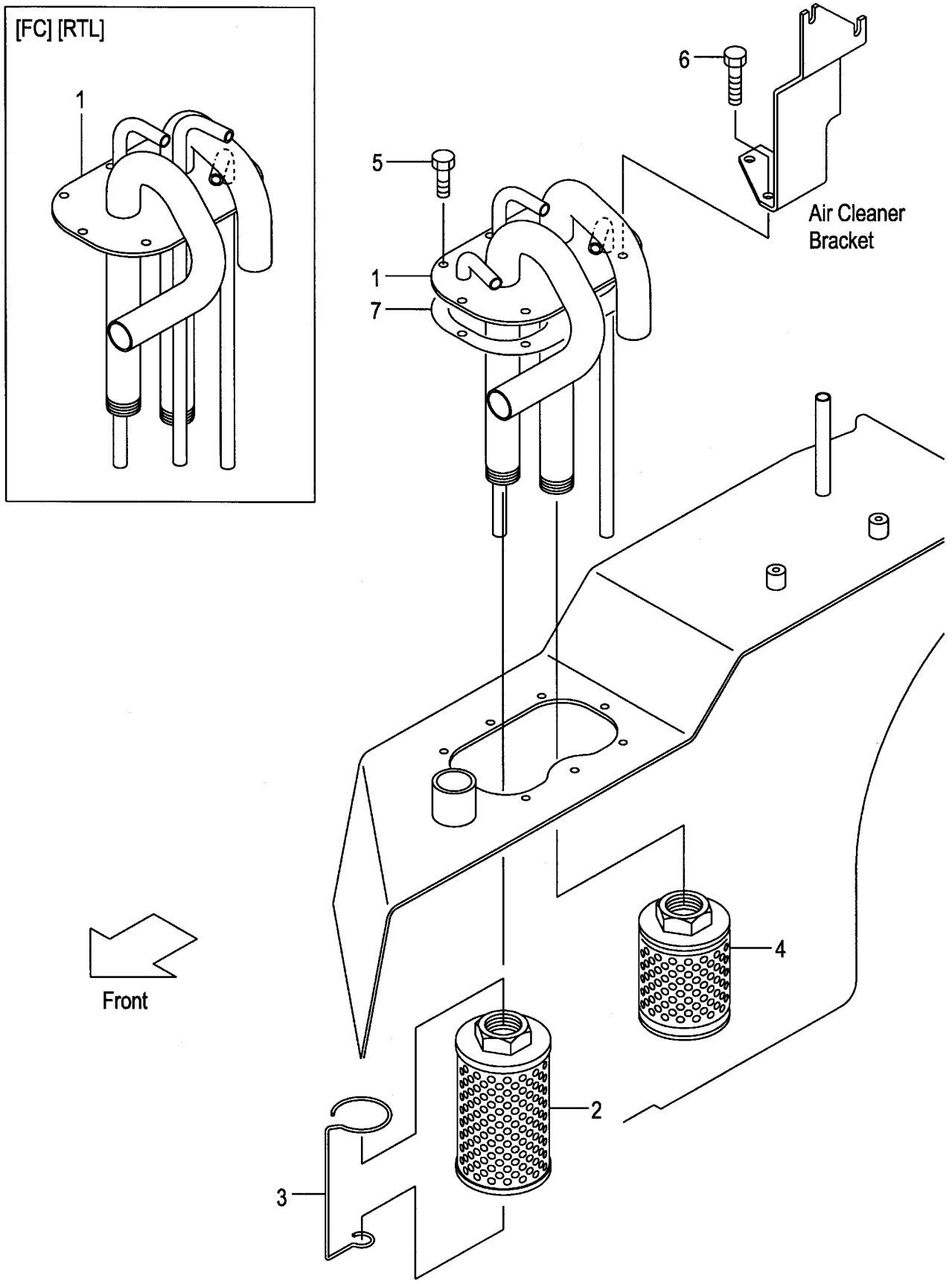

A:FG20W6 FG25W6
B:FD20W6 FD25W6

Item No	Part No.	Mark	Description		Req'd	Remarks : Serial No.
1	239H7-52001		PIPE,SUCTION	ﾊﾟｲﾌﾟ	1	
-	538S3-72001		PIPE,SUCTION	ﾊﾟｲﾌﾟ	1	[FC][RTL]
A1	271A7-52301		FILTER-ASSY,RETURN	ﾌｨﾙﾀｱｯｾﾝ	1	A:1-66000 B:1-85134 INC.2,3
-	271A7-52301		FILTER-ASSY,RETURN	ﾌｨﾙﾀｱｯｾﾝ	1	A:66001- B:85135- INC.2,3
2	214A7-52081		FILTER,RETURN	ﾌｨﾙﾀ	1	A:1-66000 B:1-85134
-	NO PART NO.	#	FILTER,RETURN	ﾌｨﾙﾀ	1	A:66001- B:85135-
3	NO PART NO.	#	WIRE	ﾜｲﾔ	1	A:1-66000 B:1-85134
-	NO PART NO.	#	WIRE	ﾜｲﾔ	1	A:66001- B:85135-
4	216G7-52051		FILTER,SUCTION	ﾌｨﾙﾀ	1	
5	229F2-22151		BOLT	ﾎﾞﾙﾄ	6	
6	229F2-22161		BOLT	ﾎﾞﾙﾄ	2	
7	216G2-22202		PACKING	ﾊﾟｯｷﾝｸﾞ	1	

FIG.160 OIL CAP & LEVEL
(F50261C0) オイルキャップ&レベル

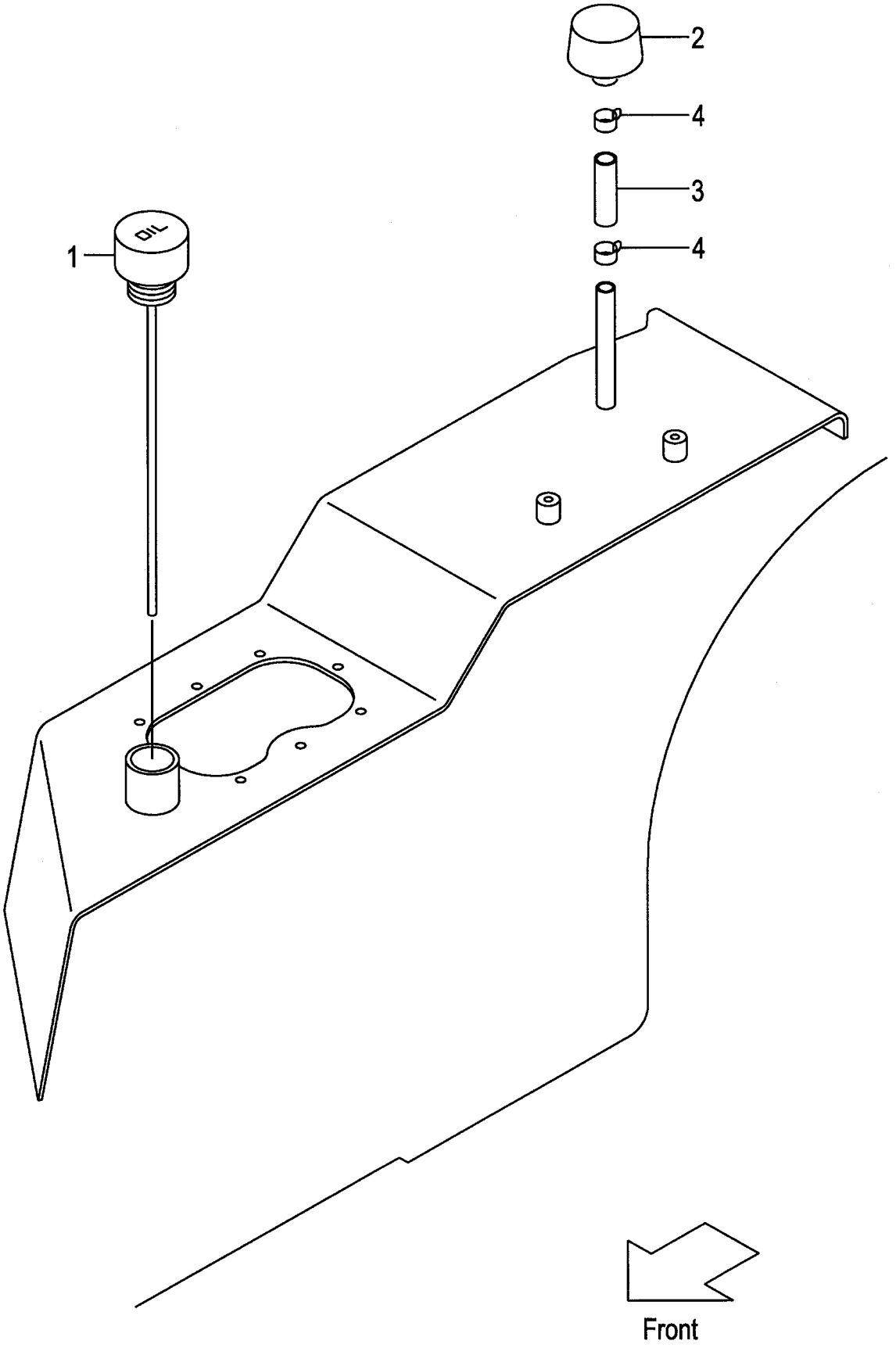

FIG.160

(F50261C0)

A:FG20C17 FG20T17 FG25C17 FG25T17 C:FD20C17 FD20T17 FD25C17 FD25T17
B:FG20C6 FG20T6 FG25C6 FG25T6 FG20W6 FG25W6 D:FD20C6 FD20T6 FD25C6 FD25T6 FD20W6 FD25W6

Item No	Part No.	Mark	Description		Req'd	Remarks : Serial No.
1	234A7-52101		CAP,OIL	ｷｬｯﾌﾟ	1	
2	216G7-52201		CAP,BREATHER	ｷｬｯﾌﾟ	1	
3	04710-04005		HOSE	ﾎｰｽ	1	
4	04914-00019		CLIP	ｸﾘｯﾌﾟ	2	

FIG.161 FUEL TANK (GASOLINE)

(F50261D0) フューエルタンク

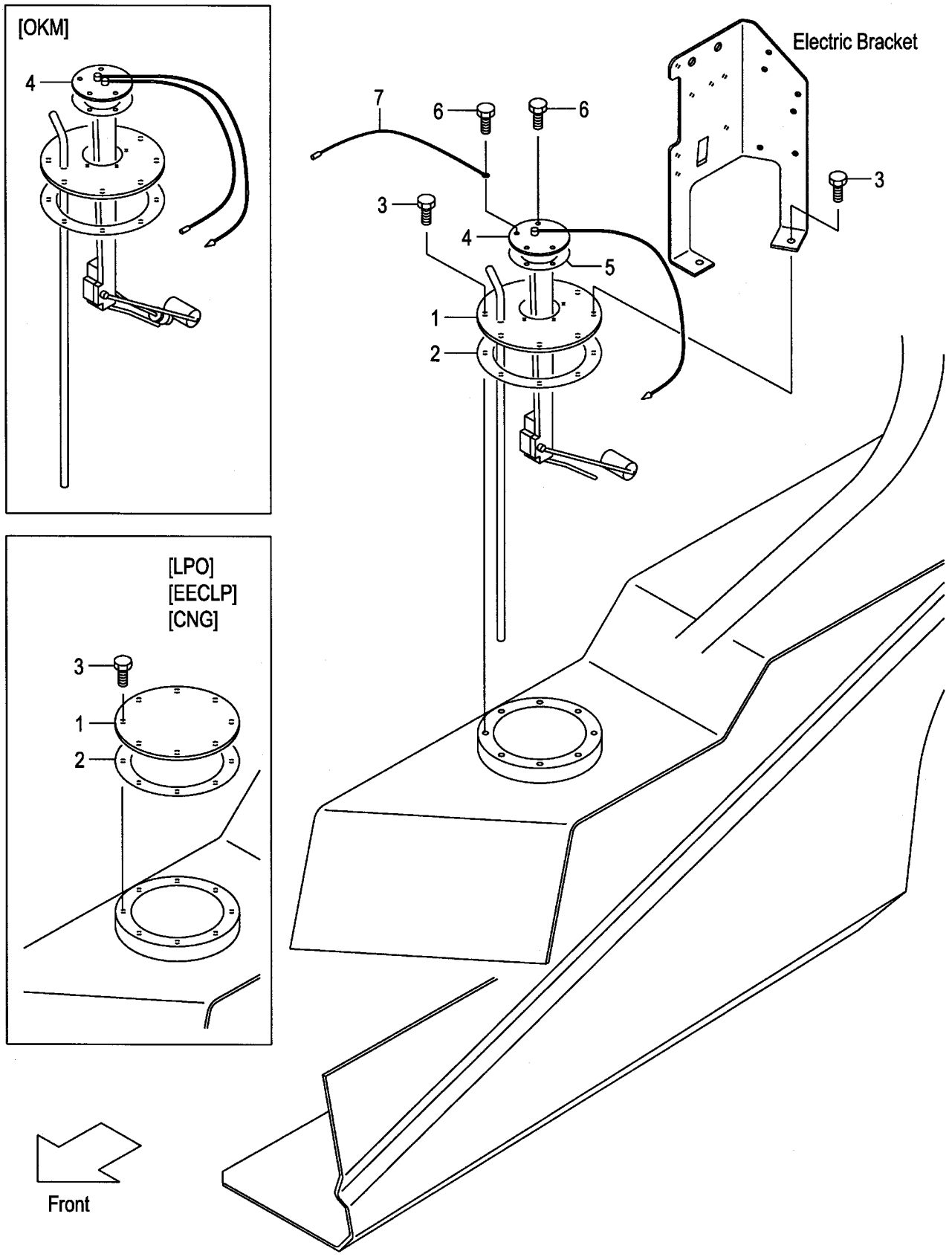

A:FG20C17 FG20T17 FG25C17 FG25T17
B:FG20C6 FG20T6 FG25C6 FG25T6 FG20W6 FG25W6

Item No	Part No.	Mark	Description		Req'd	Remarks : Serial No.
1	237A2-22101		PLATE,FUEL-TOP	ﾌﾟﾚｰﾄ	1	A:1-11042 B:1-66209
-	236G2-22101		PLATE,FUEL-TOP	ﾌﾟﾚｰﾄ	1	A:11043- B:66210-
-	537A0-52001		PLATE,FUEL-TOP	ﾌﾟﾚｰﾄ	1	[LPO][EECLP][CNG]
2	272E7-52022		GASKET	ｶﾞｽｹｯﾄ	1	
3	01183-06016		BOLT	ﾎﾞﾙﾄ	8	
4	222A2-22061		GAUGE,FUEL	ｹﾞｰｼﾞ	1	A:1-11042 B:1-66209 (WITHOUT LPO,EECLP,CNG)
-	238G2-22021		GAUGE,FUEL	ｹﾞｰｼﾞ	1	A:11043- B:66210- (WITHOUT LPO,EECLP,CNG)
-	222A2-22071		GAUGE,FUEL	ｹﾞｰｼﾞ	1	A:1-11042 B:1-66209 [OKM]
-	238G2-22031		GAUGE,FUEL	ｹﾞｰｼﾞ	1	A:11043- B:66210- [OKM]
5	229F2-22071		GASKET	ｶﾞｽｹｯﾄ	1	(WITHOUT LPO,EECLP,CNG)
6	01183-05010		BOLT	ﾎﾞﾙﾄ	5	A:1-11042 B:1-66209 (WITHOUT LPO,EECLP,CNG)
-	229F2-22171		BOLT	ﾎﾞﾙﾄ	5	A:11043- B:66210- (WITHOUT LPO,EECLP,CNG)
7	25592-42121		WIRE	ﾜｲﾔ	1	(WITHOUT LPO,EECLP,CNG)

FIG.162 FUEL TANK (DIESEL)

(F50261E0) フューエルタンク

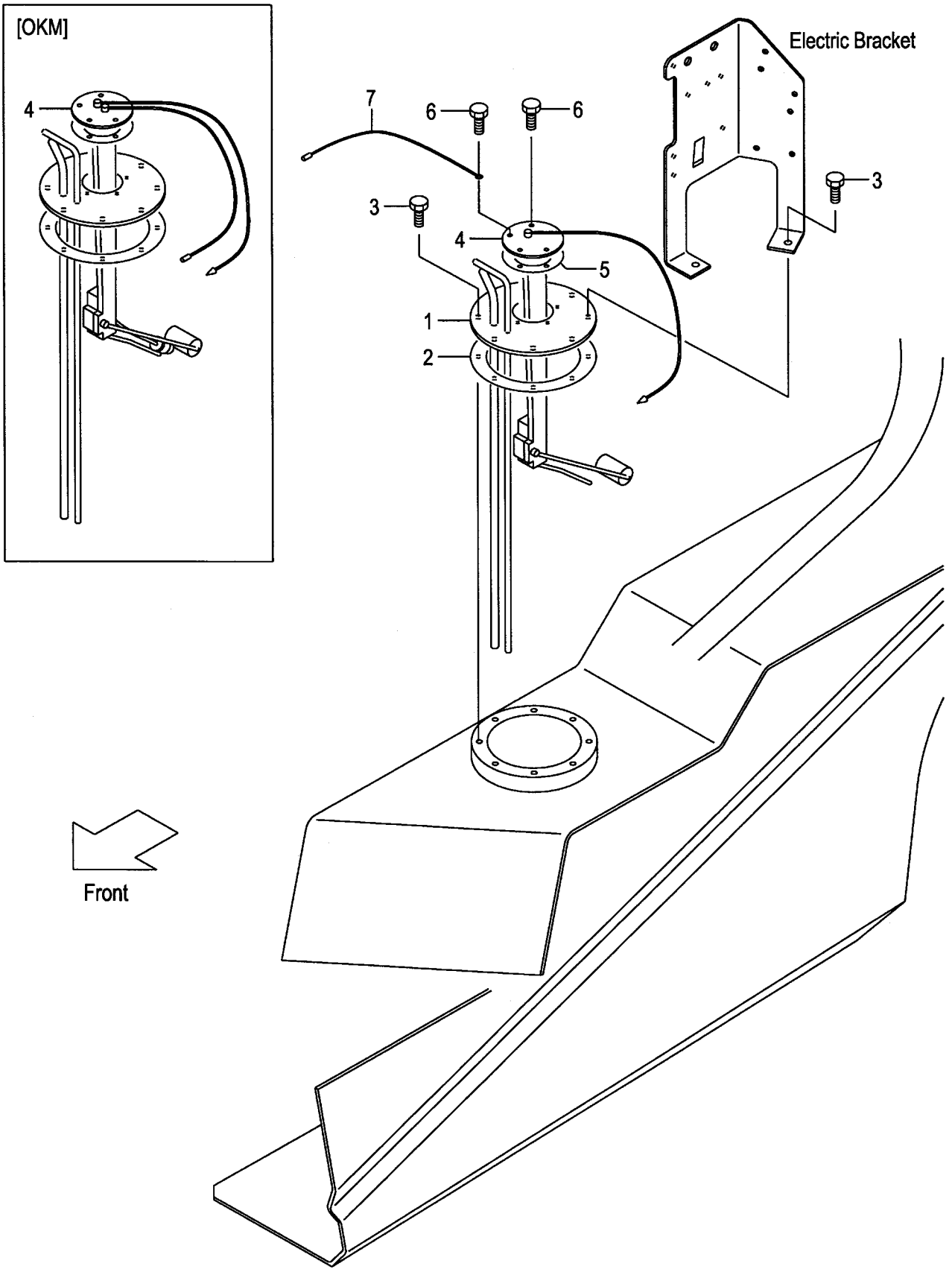

A:FD20C17 FD20T17 FD25C17 FD25T17
B:FD20C6 FD20T6 FD25C6 FD25T6 FD20W6 FD25W6

Item No	Part No.	Mark	Description		Req'd	Remarks : Serial No.
1	239A2-22101		PLATE,FUEL-TOP	ﾌﾟﾚｰﾄ	1	A:1-11019 B:1-85405
-	238G2-22101		PLATE,FUEL-TOP	ﾌﾟﾚｰﾄ	1	A:11020- B:85406-
2	272E7-52022		GASKET	ｶﾞｽｹｯﾄ	1	
3	01183-06016		BOLT	ﾎﾞﾙﾄ	8	
4	222A2-22061		GAUGE,FUEL	ｹﾞｰｼﾞ	1	A:1-11019 B:1-85405
-	238G2-22021		GAUGE,FUEL	ｹﾞｰｼﾞ	1	A:11020- B:85406- (WITHOUT LPO,EECLP,CNG)
-	222A2-22071		GAUGE,FUEL	ｹﾞｰｼﾞ	1	A:1-11019 B:1-85405 [OKM]
-	238G2-22031		GAUGE,FUEL	ｹﾞｰｼﾞ	1	A:11020- B:85406- [OKM]
5	229F2-22071		GASKET	ｶﾞｽｹｯﾄ	1	
6	01183-05010		BOLT	ﾎﾞﾙﾄ	5	A:1-11019 B:1-85405
-	229F2-22171		BOLT	ﾎﾞﾙﾄ	5	A:11020- B:85406- (WITHOUT LPO,EECLP,CNG)
7	25592-42121		WIRE	ﾜｲﾔ	1	

FIG.163 BALANCE WEIGHT

(F5026310) ﾊﾞﾗﾝｽｳｴｲﾄ

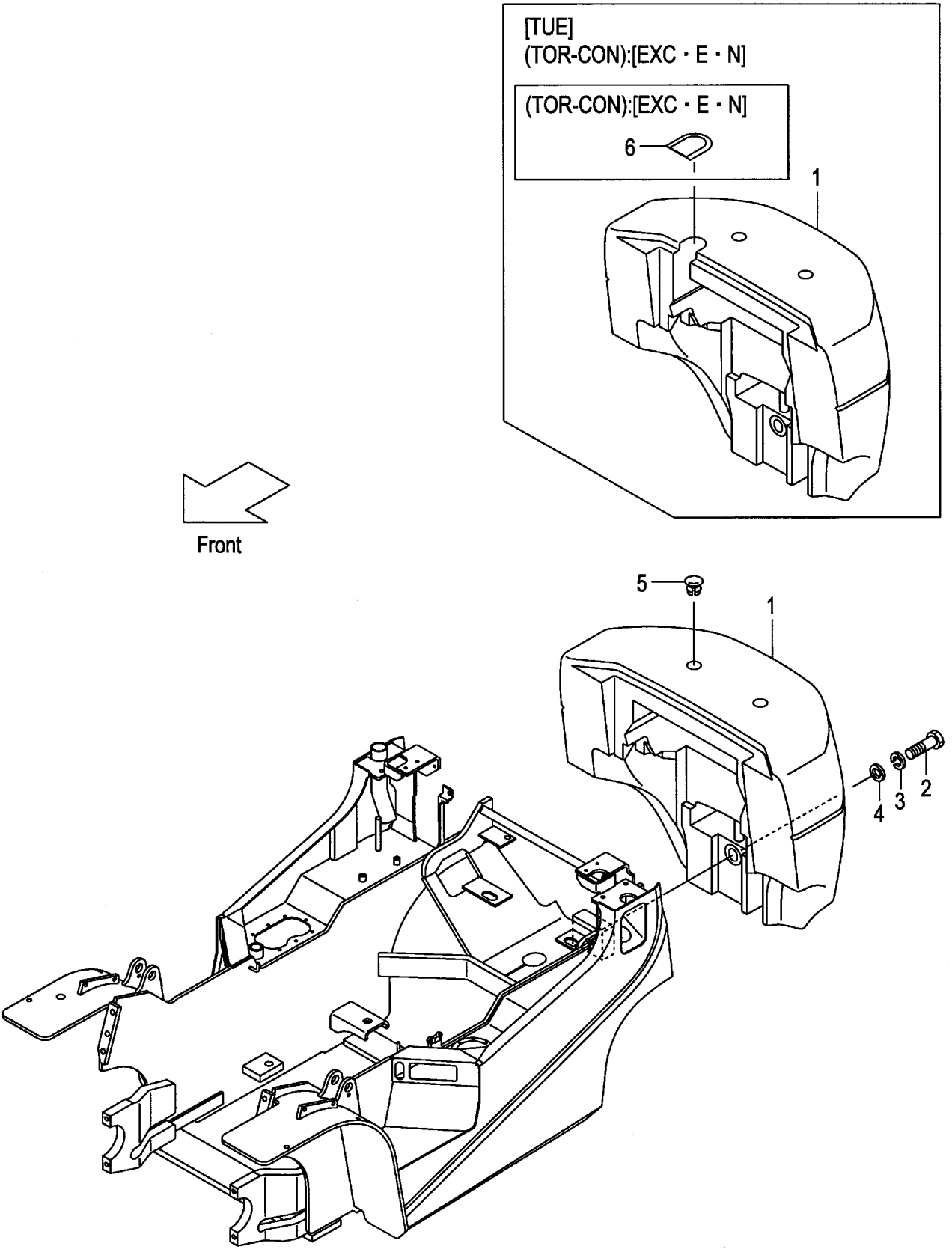

A:FG20C17 FG20T17 D:FG20T6 G:FG20W6 K:FD25C17 FD25T17 N:FD25C6 R:FD25W6
B:FG25C17 FG25T17 E:FG25C6 H:FG25W6 L:FD20C6 P:FD25T6
C:FG20C6 F:FG25T6 J:FD20C17 FD20T17 M:FD20T6 Q:FD20W6

FIG.163
(F5026310)

Item No	Part No.	Mark	Description		Req'd	Remarks : Serial No.
1	NO PART NO.	#	WEIGHT,BALANCE	ｳｴｲﾄ	1	
2	01110-30150		BOLT	ﾎﾞﾙﾄ	1	
3	02010-00030		WASHER	ﾜｯｼｬ	1	
4	234A6-32001		WASHER	ﾜｯｼｬ	1	
5	216G6-32101		CAP	ｷｬｯﾌﾟ	2	
6	516G2-72051		COVER	ｶﾊﾞｰ	1	D,F,M,P [EXC][EXE][EXN]

FIG.164 BALANCE WEIGHT [RW]

(F5026320) ﾊﾞﾗﾝｽｳｴｲﾄ

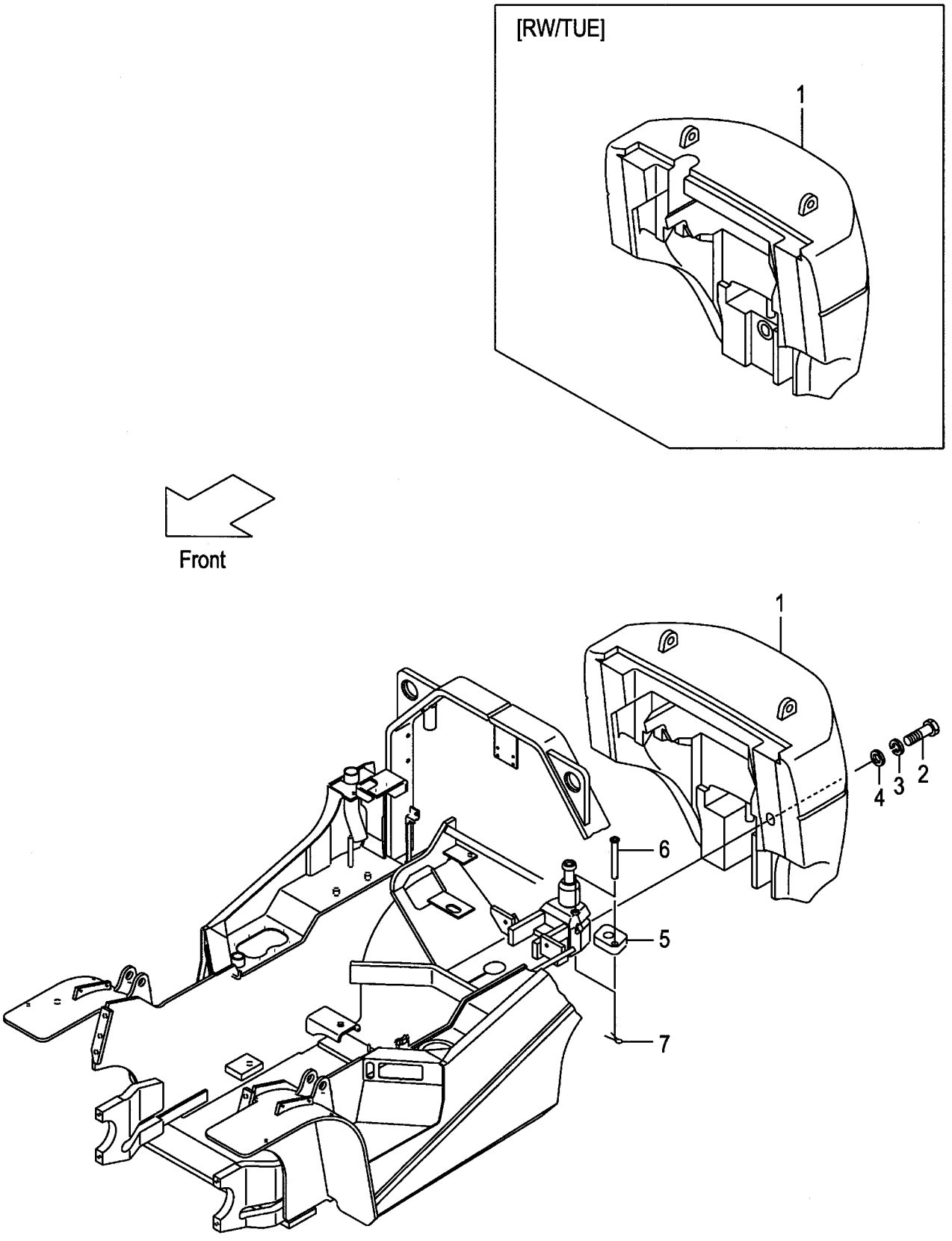

A:FG25C6 FG25T6 FG25W6
B:FD25C6 FD25T6 FD25W6

FIG.164
(F5026320)

Item No	Part No.	Mark	Description		Req'd	Remarks : Serial No.
1	NO PART NO.	#	WEIGHT,BALANCE,2.5	ｳｴｲﾄ	1	[RW][RW/TUE]
2	01110-30090		BOLT	ﾎﾞﾙﾄ	1	[RW][RW/TUE]
3	02010-00030		WASHER	ﾜｯｼｬ	1	[RW][RW/TUE]
4	22216-30051		WASHER	ﾜｯｼｬ	1	[RW][RW/TUE]
5	52691-92211		STOPPER	ｽﾄｯﾊﾟ	1	[RW][RW/TUE]
6	52691-92221		PIN	ﾋﾟﾝ	1	[RW][RW/TUE]
7	02200-04040		PIN,COTTER	ﾋﾟﾝ	1	[RW][RW/TUE]

FIG.165 BALANCE WEIGHT [LPG][LPO][EECLP][CNG]

(F5026330) ﾊﾞﾗﾝｽｳｴｲﾄ

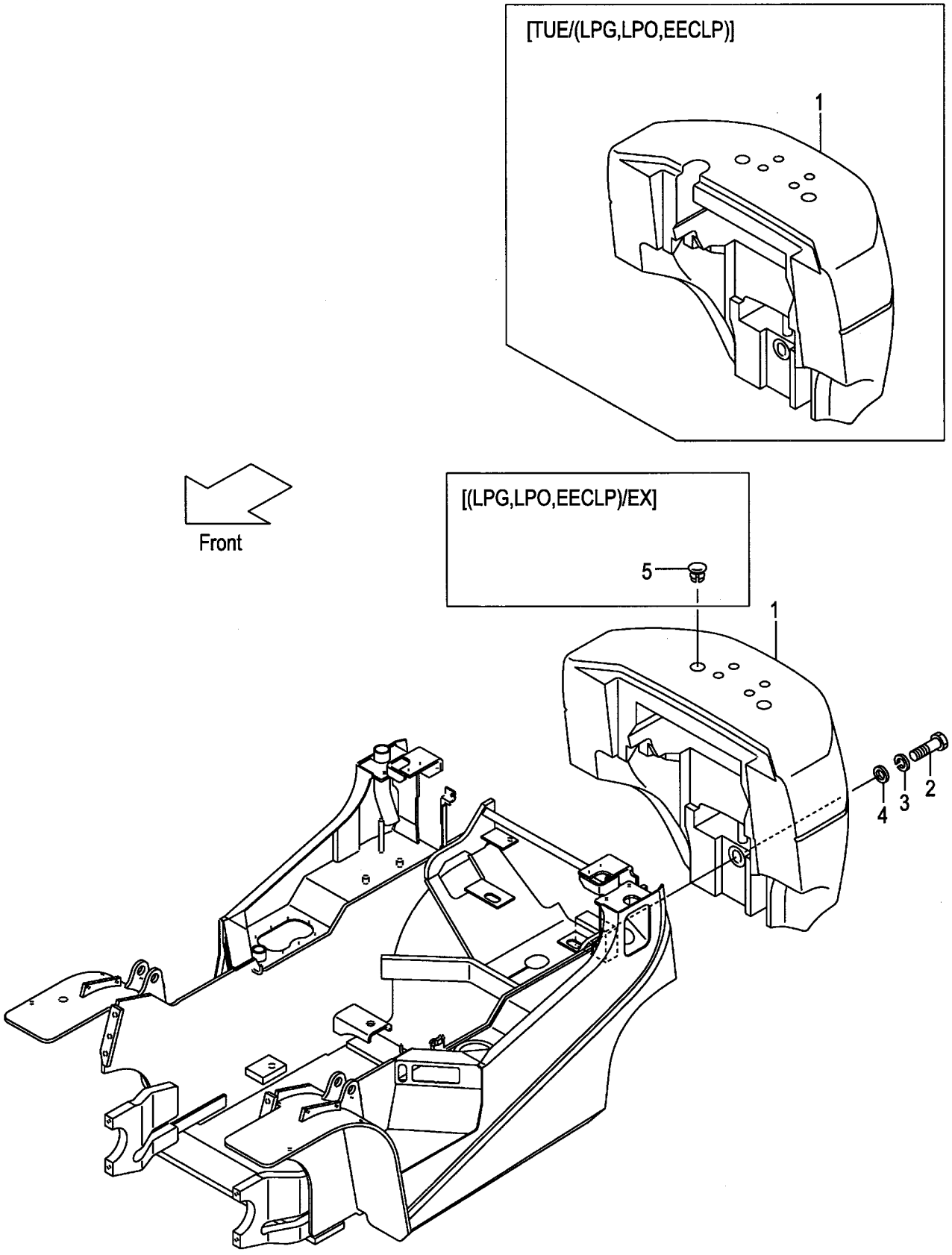

A:FG20C17 FG20T17 D:FG25C6 FG25T6
B:FG25C17 FG25T17 E:FG20W6
C:FG20C6 FG20T6 F:FG25W6

FIG.165
(F5026330)

Item No	Part No.	Mark	Description		Req'd	Remarks : Serial No.
1	NO PART NO.	#	WEIGHT,BALANCE	ｳｴｲﾄ	1	[LPG][LPO][EECLP][TUE/LPG] [TUE/LPO][TUE/EECLP]
-	NO PART NO.	#	WEIGHT,BALANCE	ｳｴｲﾄ	1	C,D [LPG/EX][LPO/EX][EECLP/EX]
-	NO PART NO.	#	WEIGHT,BALANCE,2.5	ｳｴｲﾄ	1	D,F [CNG]
2	01110-30150		BOLT	ﾎﾞﾙﾄ	1	[LPG][LPO][EECLP][TUE/LPG] [TUE/LPO][TUE/EECLP]
-	01110-30150		BOLT	ﾎﾞﾙﾄ	1	C,D [LPG/EX][LPO/EX][EECLP/EX]
-	01110-30150		BOLT	ﾎﾞﾙﾄ	1	D,F [CNG]
3	02010-00030		WASHER	ﾜｯｼｬ	1	[LPG][LPO][EECLP][TUE/LPG] [TUE/LPO][TUE/EECLP]
-	02010-00030		WASHER	ﾜｯｼｬ	1	C,D [LPG/EX][LPO/EX][EECLP/EX]
-	02010-00030		WASHER	ﾜｯｼｬ	1	D,F [CNG]
4	234A6-32001		WASHER	ﾜｯｼｬ	1	[LPG][LPO][EECLP][TUE/LPG] [TUE/LPO][TUE/EECLP]
-	234A6-32001		WASHER	ﾜｯｼｬ	1	C,D [LPG/EX][LPO/EX][EECLP/EX]
-	234A6-32001		WASHER	ﾜｯｼｬ	1	D,F [CNG]
5	216G6-32101		CAP	ｷｬｯﾌﾟ	2	C,D [LPG/EX][LPO/EX][EECLP/EX]

FIG.166 BALANCE WEIGHT [HC]

(F5026340) ﾊﾞﾗﾝｽｳｴｲﾄ

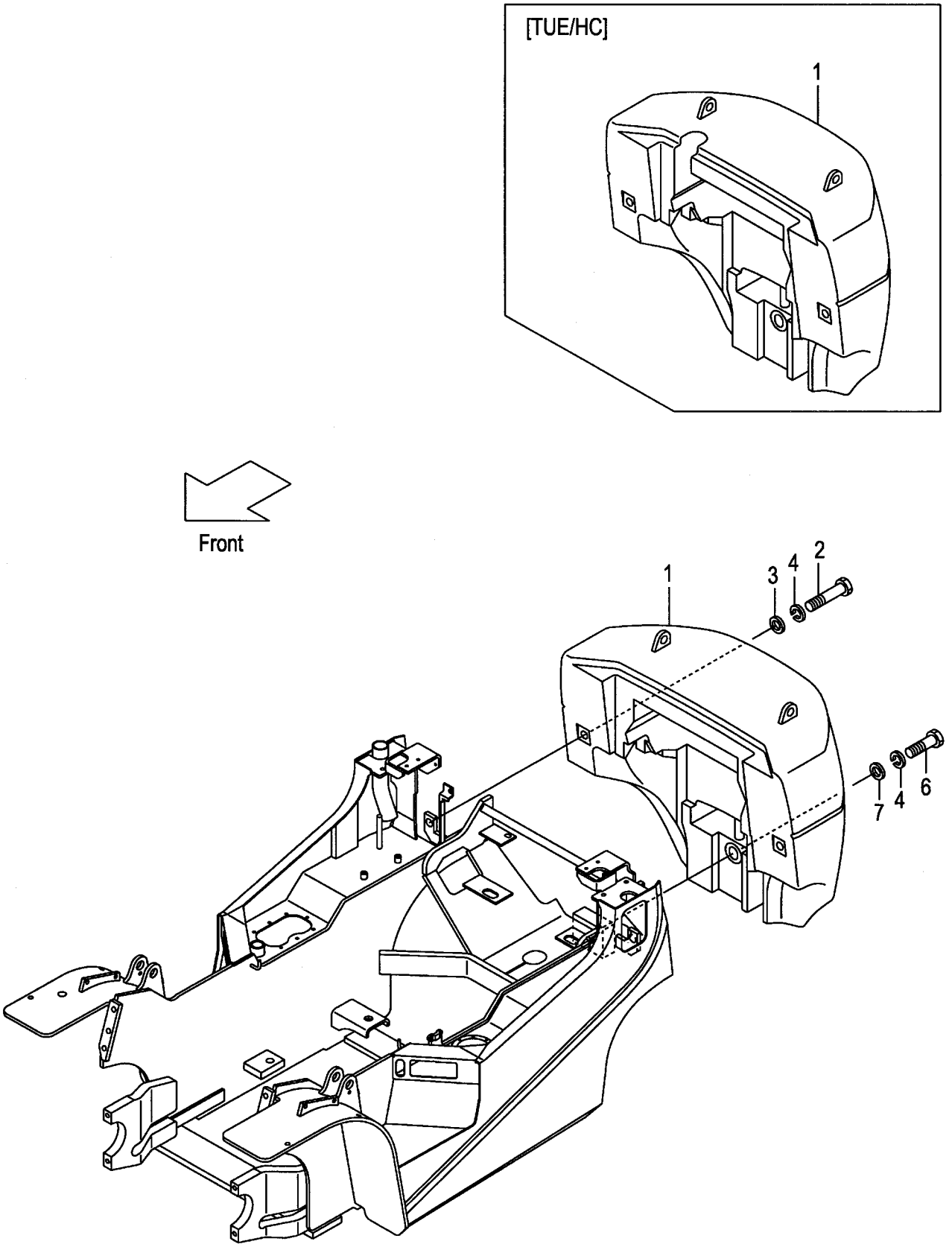

A:FG20C17 FG20T17 D:FG25C6 FG25T6 FG25W6 G:FD20C6 FD20T6 FD20W6
B:FG25C17 FG25T17 E:FD20C17 FD20T17 H:FD25C6 FD25T6 FD25W6
C:FG20C6 FG20T6 FG20W6 F:FD25C17 FD25T17

FIG.166
(F5026340)

Item No	Part No.	Mark	Description		Req'd	Remarks : Serial No.
1	NO PART NO.	#	WEIGHT,BALANCE	ｳｴｲﾄ	1	[HC][TUE/HC]
2	01113-30230		BOLT	ﾎﾞﾙﾄ	2	A,C,E,G [HC][TUE/HC]
-	01113-30300		BOLT	ﾎﾞﾙﾄ	2	B,D,F,H [HC][TUE/HC]
3	225R6-32001		WASHER	ﾜｯｼｬ	2	[HC][TUE/HC]
4	02010-00030		WASHER	ﾜｯｼｬ	3	[HC][TUE/HC]
5	225R9-12101	+	DECAL,HOOK-CAUTION	ﾃﾞｶﾙ	1	[HC][TUE/HC]
6	01110-30150		BOLT	ﾎﾞﾙﾄ	1	[HC][TUE/HC]
7	234A6-32001		WASHER	ﾜｯｼｬ	1	[HC][TUE/HC]

FIG.167 FRONT GUARD

(F5026410) ﾌﾛﾝﾄｶﾞｰﾄﾞ

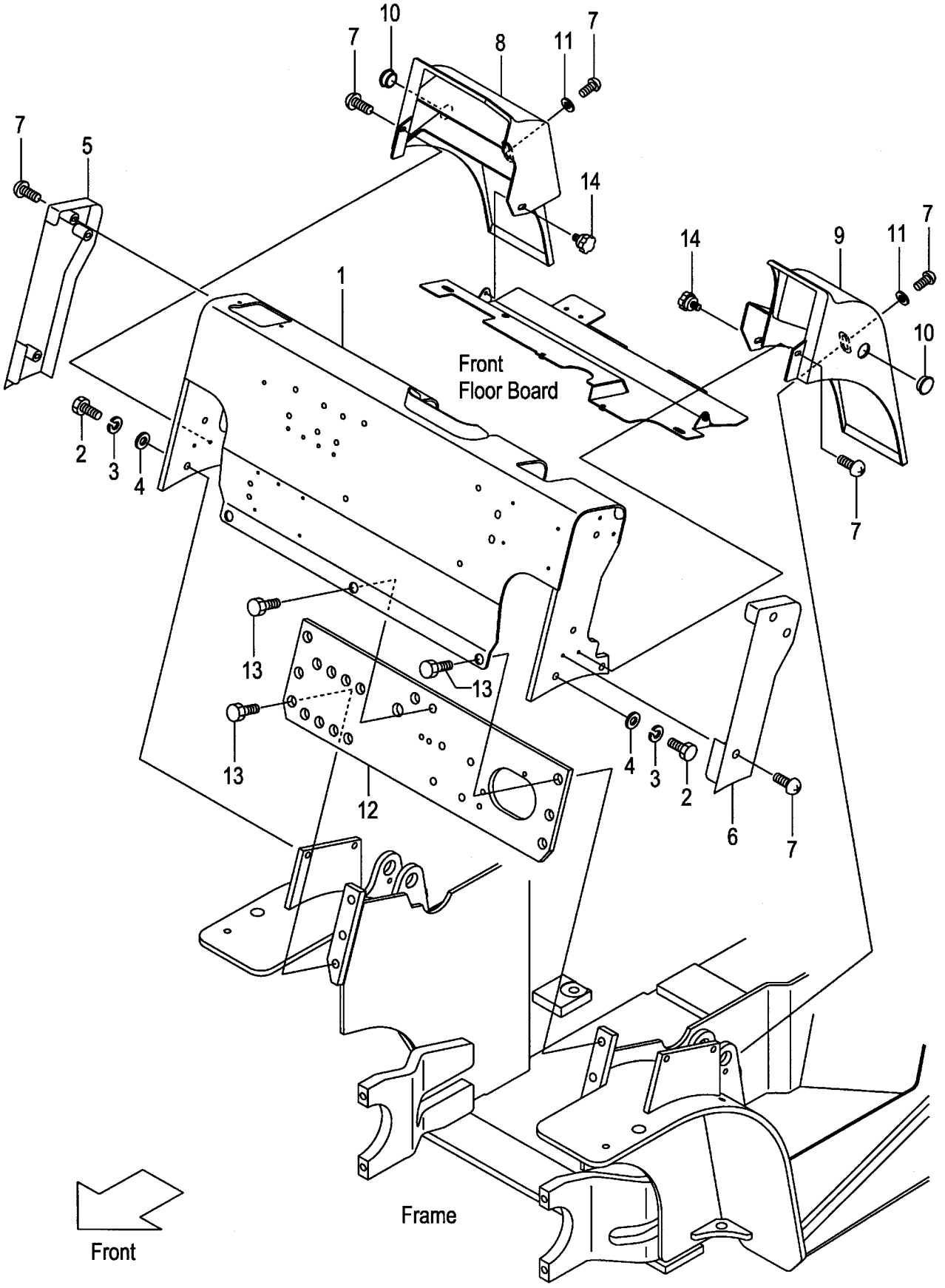

A:FG20C17 FG20T17 FG25C17 FG25T17 D:FG20W6 FG25W6 G:FD20T6 FD25
B:FG20C6 FG25C6 E:FD20C17 FD20T17 FD25C17 FD25T17 H:FD20W6 FD25
C:FG20T6 FG25T6 F:FD20C6 FD25C6

FIG.167
(F5026410)

Item No	Part No.	Mark	Description		Req'd	Remarks : Serial No.
1	239A6-40201		GUARD,FRONT	ｶﾞｰﾄﾞ	1	
-	539A2-60601		GUARD,FRONT	ｶﾞｰﾄﾞ	1	C,G [EXN]
2	01186-12030		BOLT	ﾎﾞﾙﾄ	4	
-	01109-12030		BOLT,STAINLESS	ﾎﾞﾙﾄ	4	[FC]
3	02013-00012		WASHER	ﾜｯｼｬ	4	[FC]
4	02001-00012		WASHER	ﾜｯｼｬ	4	[FC]
5	239A6-43001		COVER,SIDE,RH	ｶﾊﾞｰ	1	
6	239A6-43011		COVER,SIDE,LH	ｶﾊﾞｰ	1	
7	214A6-42252		SCREW	ｽｸﾘｭ	10	
8	239A6-43101		COVER,TILT-CYL,RH	ｶﾊﾞｰ	1	
9	239A6-43111		COVER,TILT-CYL,LH	ｶﾊﾞｰ	1	
10	514A5-12701		PLUG,HOLE	ﾌﾟﾗｸﾞ	2	
11	02000-20010		WASHER	ﾜｯｼｬ	2	
12	239A6-42001		PLATE,FRONT	ﾌﾟﾚｰﾄ	1	
13	216G6-43561		BOLT,FLANGE	ﾎﾞﾙﾄ	7	
14	256C5-12671		BOLT,KNOB	ﾎﾞﾙﾄ	2	

FIG.168 BONNET

(F5026420) ﾎﾞﾝﾈｯﾄ

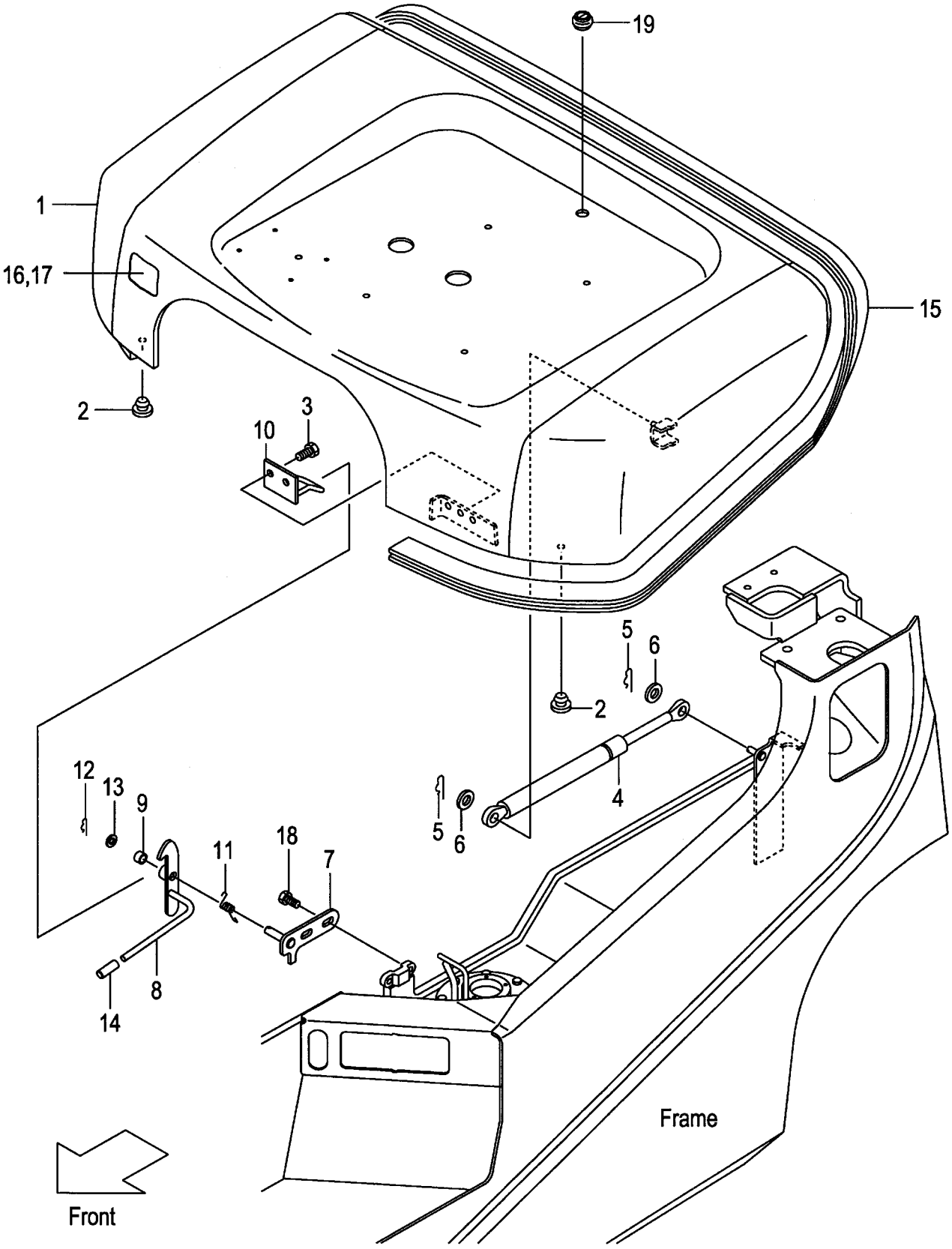

A:FG20C17 FG20T17 FG25C17 FG25T17:1-11022 D:FD20C17 FD20T17 FD25C17 FD25T17:1-110
B:FG20C6 FG20T6 FG20W6:1-65505 E:FD20C6 FD20T6 FD20W6:1-84063
C:FG25C6 FG25T6 FG25W6:1-65505 F:FD25C6 FD25T6 FD25W6:1-84063

FIG.168
(F5026420)

Item No	Part No.	Mark	Description		Req'd	Remarks : Serial No.
1	209P6-40301		BONNET	ﾎﾞﾝﾈｯﾄ	1	A:1-11012 B,C:1-65146 D:1-11006 E,F:1-83306
-	239A6-40501		BONNET	ﾎﾞﾝﾈｯﾄ	1	A:11013- B,C:65147- D:11007- E,F:83307-
-	539A5-30601		BONNET	ﾎﾞﾝﾈｯﾄ	1	B,C,E,F [SCB001][SCBCR]
-	539C1-90401		BONNET	ﾎﾞﾝﾈｯﾄ	1	C,F [RW]
-	539C1-90401		BONNET	ﾎﾞﾝﾈｯﾄ	1	C [CNG]
-	539A6-42101		BONNET	ﾎﾞﾝﾈｯﾄ	1	[SETDX1]
-	539A6-42101		BONNET	ﾎﾞﾝﾈｯﾄ	1	B,C,E,F [SETDX1/SCB001][SETDX1/SCBCR]
2	23456-42181		STOPPER,BONNET	ｽﾄｯﾊﾟ	2	
3	01183-08016		BOLT	ﾎﾞﾙﾄ	2	
4	535C2-60401		SPRING,GAS	ｽﾌﾟﾘﾝｸﾞ	1	
5	216H3-92171		PIN,SNAP	ﾋﾟﾝ	2	
6	02000-00008		WASHER	ﾜｯｼｬ	2	
A1	218G6-40521		CATCH-ASSY,BONNET	ﾎﾞﾝﾈｯﾄｷｬｯﾁｱｯｾﾝ	1	INC.7-13
7	218G6-42451		BRACKET	ﾌﾞﾗｹｯﾄ	1	
8	218G6-42471		LATCH	ﾗｯﾁ	1	
9	23655-22101		BUSHING	ﾌﾞｯｼﾝｸﾞ	1	
10	216G6-42451		HOOK	ﾌｯｸ	1	
11	216G6-42481		SPRING	ｽﾌﾟﾘﾝｸﾞ	1	
12	216H5-42141		PIN,SNAP	ﾋﾟﾝ	1	
13	02000-00010		WASHER	ﾜｯｼｬ	1	
14	216G6-52291		CAP	ｷｬｯﾌﾟ	1	
15	209P6-42841		RUBBER,SEAL,BONNET	ﾗﾊﾞｰ	1	
16	209P6-40401		INSULATOR	ｲﾝｼｭﾚｰﾀ	1	
-	539A6-42111		INSULATOR	ｲﾝｼｭﾚｰﾀ	1	[SETDX1]
-	539A6-42111		INSULATOR	ｲﾝｼｭﾚｰﾀ	1	B,C,E,F [SETDX1/SCB001][SETDX1/SCBCR]
17	216G6-42541		CLIP	ｸﾘｯﾌﾟ	10	
18	01185-08020		BOLT	ﾎﾞﾙﾄ	2	
19	27662-63041		GROMMET	ｸﾞﾛﾒｯﾄ	1	

FIG.168A BONNET

(F5026421) ﾎﾞﾝﾈｯﾄ

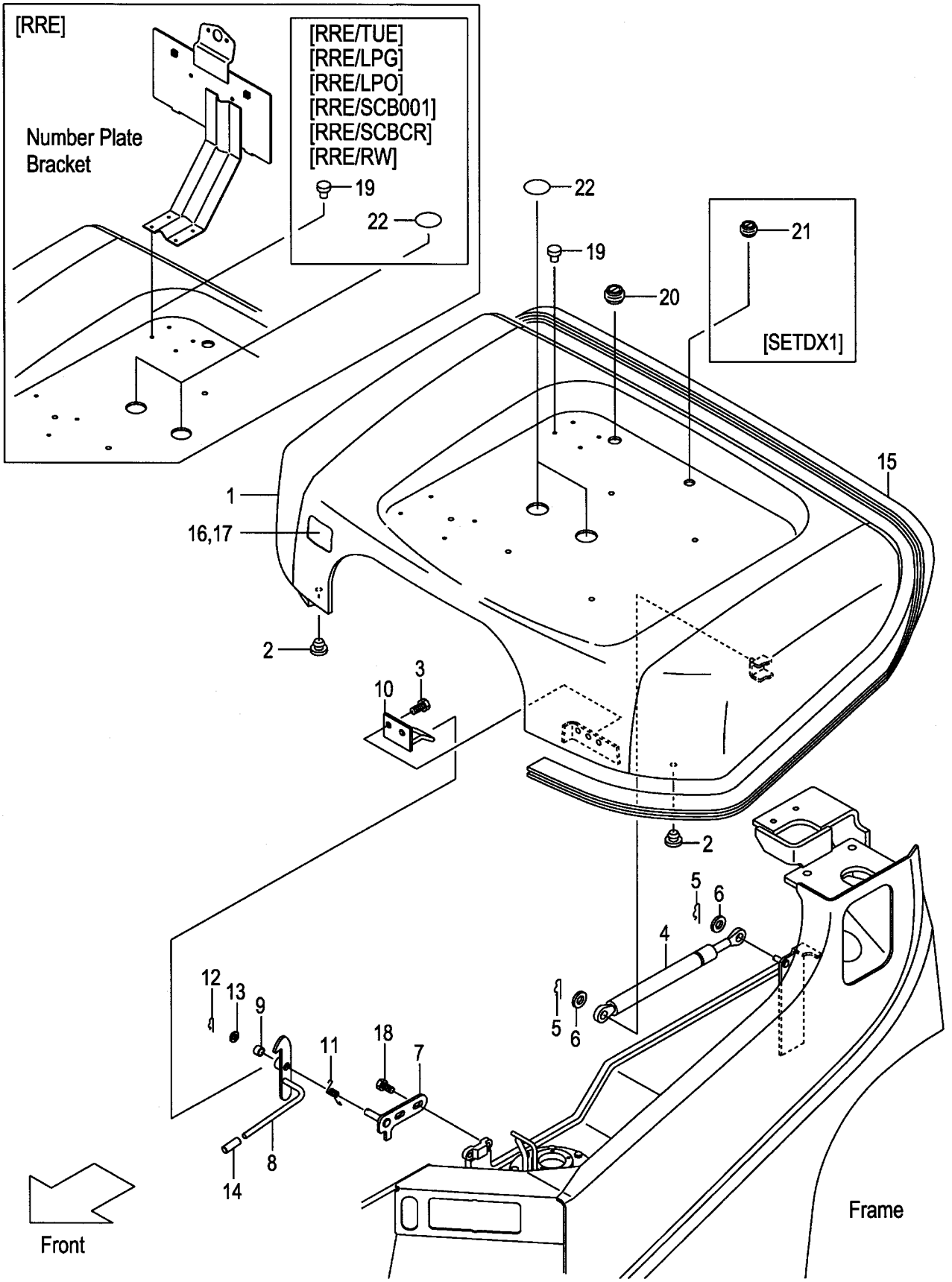

A:FG20C17 FG20T17 FG25C17 FG25T17:11023- D:FD20C17 FD20T17 FD25C17 FD25T17:11012-
B:FG20C6 FG20T6 FG20W6:65506- E:FD20C6 FD20T6 FD20W6:84064-
C:FG25C6 FG25T6 FG25W6:65506- F:FD25C6 FD25T6 FD25W6:84064-

FIG.168A
(F5026421)

Item No	Part No.	Mark	Description		Req'd	Remarks : Serial No.
1	239A6-40502		BONNET	ﾎﾞﾝﾈｯﾄ	1	
-	539A5-30602		BONNET	ﾎﾞﾝﾈｯﾄ	1	B,C,E,F [SCB001][SCBCR]
-	539C1-90402		BONNET	ﾎﾞﾝﾈｯﾄ	1	C,F [RW]
-	539C1-90402		BONNET	ﾎﾞﾝﾈｯﾄ	1	C [CNG]
-	539A6-42101		BONNET	ﾎﾞﾝﾈｯﾄ	1	[SETDX1]
-	539A6-42101		BONNET	ﾎﾞﾝﾈｯﾄ	1	B,C,E,F [SETDX1/SCB001][SETDX1/SCBCR]
2	23456-42181		STOPPER,BONNET	ｽﾄｯﾊﾟ	2	
3	01183-08016		BOLT	ﾎﾞﾙﾄ	2	
4	535C2-60401		SPRING,GAS	ｽﾌﾟﾘﾝｸﾞ	1	
-	539A9-92201		SPRING,GAS	ｽﾌﾟﾘﾝｸﾞ	1	[RRE]
5	216H3-92171		PIN,SNAP	ﾋﾟﾝ	2	
6	02000-00008		WASHER	ﾜｯｼｬ	2	
A1	218G6-40521		CATCH-ASSY,BONNET	ﾎﾞﾝﾈｯﾄｷｬｯﾁｱｯｾﾝ	1	INC.7-13
7	218G6-42451		BRACKET	ﾌﾞﾗｹｯﾄ	1	
8	218G6-42471		LATCH	ﾗｯﾁ	1	
9	23655-22101		BUSHING	ﾌﾞｯｼﾝｸﾞ	1	
10	216G6-42451		HOOK	ﾌｯｸ	1	
11	216G6-42481		SPRING	ｽﾌﾟﾘﾝｸﾞ	1	
12	216H5-42141		PIN,SNAP	ﾋﾟﾝ	1	
13	02000-00010		WASHER	ﾜｯｼｬ	1	
14	216G6-52291		CAP	ｷｬｯﾌﾟ	1	
15	209P6-42841		RUBBER,SEAL,BONNET	ﾗﾊﾞｰ	1	
16	209P6-40401		INSULATOR	ｲﾝｼｭﾚｰﾀ	1	
-	539A5-30701		INSULATOR	ｲﾝｼｭﾚｰﾀ	1	B,C,E,F [SCB001][SCBCR]
-	539A6-42111		INSULATOR	ｲﾝｼｭﾚｰﾀ	1	[SETDX1]
-	539A6-42111		INSULATOR	ｲﾝｼｭﾚｰﾀ	1	B,C,E,F [SETDX1/SCB001][SETDX1/SCBCR]
17	216G6-42541		CLIP	ｸﾘｯﾌﾟ	10	
18	01185-08020		BOLT	ﾎﾞﾙﾄ	2	
19	25596-42361		RIVET,NYLON	ﾘﾍﾞｯﾄ	4	(WITHOUT RRE)
-	25596-42361		RIVET,NYLON	ﾘﾍﾞｯﾄ	4	[RRE/TUE]
-	25596-42361		RIVET,NYLON	ﾘﾍﾞｯﾄ	4	A,B,C [RRE/LPG][RRE/LPO]
-	25596-42361		RIVET,NYLON	ﾘﾍﾞｯﾄ	4	B,C,E,F [RRE/SCB001][RRE/SCBCR]
-	25596-42361		RIVET,NYLON	ﾘﾍﾞｯﾄ	4	C,F [RRE/RW]
20	27662-62711		GROMMET	ｸﾞﾛﾒｯﾄ	1	
21	27662-63041		GROMMET	ｸﾞﾛﾒｯﾄ	1	[SETDX1]
-	27662-63041		GROMMET	ｸﾞﾛﾒｯﾄ	1	B,C,E,F [SETDX1/SCB001][SETDX1/SCBCR]

FIG.168A BONNET

(F5026421) ﾎﾞﾝﾈｯﾄ

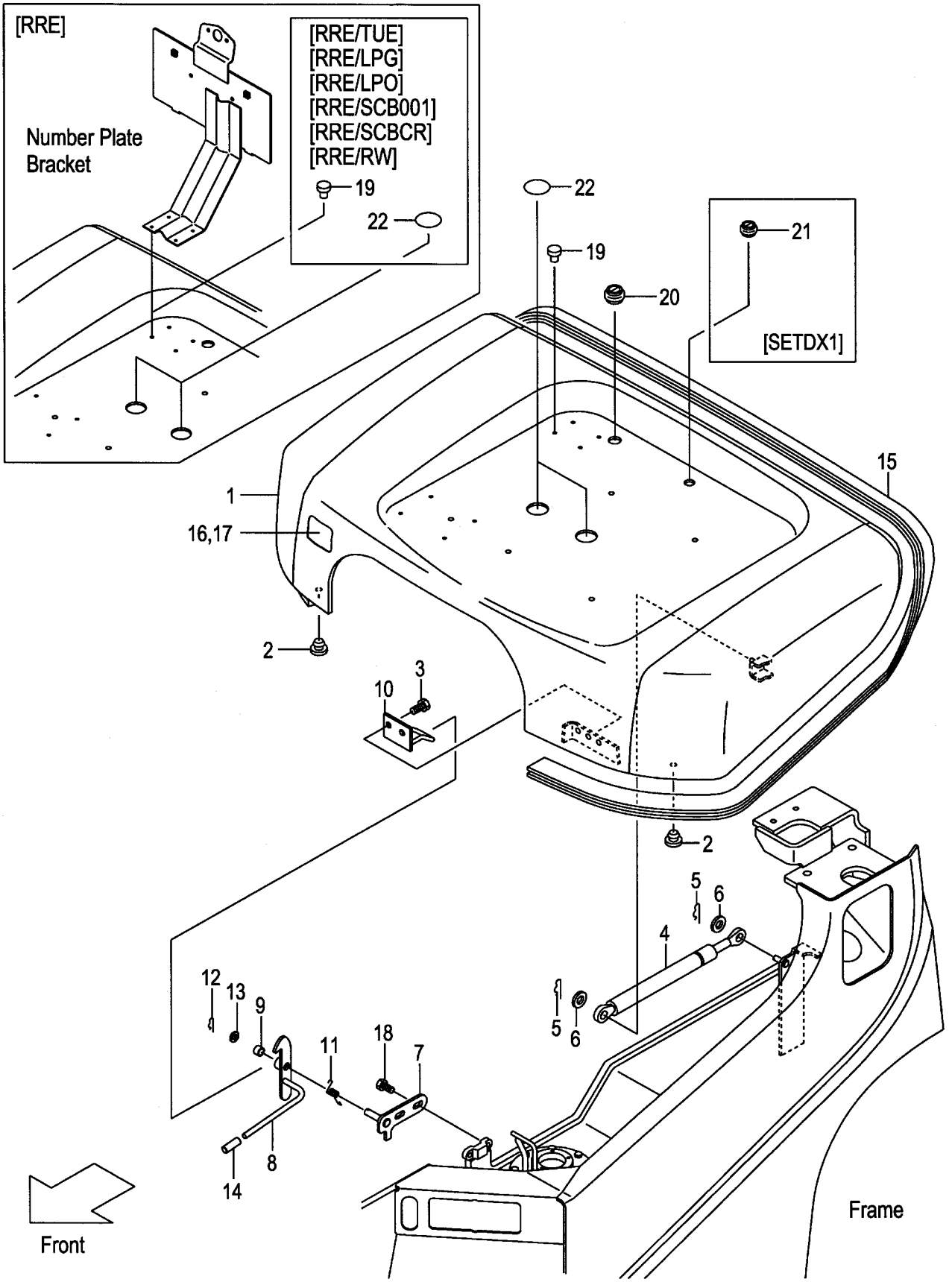

A:FG20C17 FG20T17 FG25C17 FG25T17:11023- D:FD20C17 FD20T17 FD25C17 FD25T17:11012-
B:FG20C6 FG20T6 FG20W6:65506- E:FD20C6 FD20T6 FD20W6:84064-
C:FG25C6 FG25T6 FG25W6:65506- F:FD25C6 FD25T6 FD25W6:84064-

FIG.168A
(F5026421)

Item No	Part No.	Mark	Description	Req'd	Remarks : Serial No.
22	239A6-42251		SEAT,BONNET シート	2	A:11025- B,C:65466- D:11011- E,F:84011- (WITHOUT RRE)
-	239A6-42251		SEAT,BONNET シート	2	A:11025- B,C:65466- D:11011- E,F:84011- [RRE/TUE]
-	239A6-42251		SEAT,BONNET シート	2	A:11025- B,C:65466- [RRE/LPG][RRE/LPO]
-	239A6-42251		SEAT,BONNET シート	2	B,C:65466- E,F:84011- [RRE/SCB001][RRE/SCBCR]
-	239A6-42251		SEAT,BONNET シート	2	C:65466- F:84011- [RRE/RW]

FIG.169 RADIATOR COVER

(F5026430) ﾗｼﾞｴｰﾀｶﾊﾞｰ

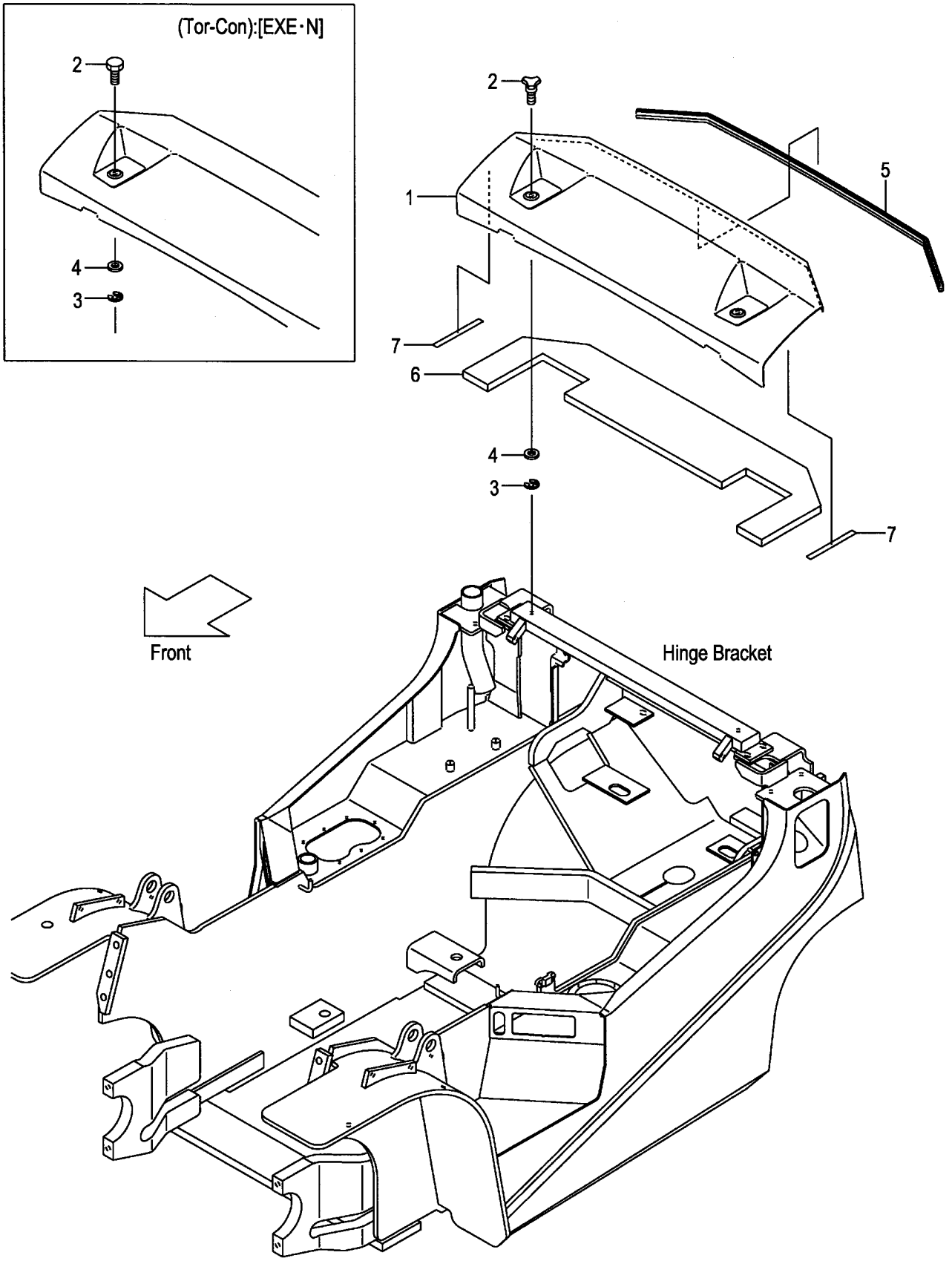

A:FG20C17 FG20T17 FG25C17 FG25T17:1-11027 D:FG20W6 FG25W6:1-65599 G:FD20T6 FD25T6:1-84229
B:FG20C6 FG25C6:1-65599 E:FD20C17 FD20T17 FD25C17 FD25T17:1-11011 H:FD20W6 FD25W6:1-84229
C:FG20T6 FG25T6:1-11027 F:FD20C6 FD25C6:1-84229

FIG.169
(F5026430)

Item No	Part No.	Mark	Description		Req'd	Remarks : Serial No.
1	239A6-40301		COVER,RADIATOR	ｶﾊﾞｰ	1	
-	539A5-42351		COVER,RADIATOR	ｶﾊﾞｰ	1	B,C,D,F,G,H [AW061]
2	222A6-42451		BOLT,KNOB	ﾎﾞﾙﾄ	2	
-	01181-08016		BOLT	ﾎﾞﾙﾄ	2	C,G [EXE][EXN]
3	222A6-42461		E-RING	Eﾘﾝｸﾞ	2	
4	02000-00008		WASHER	ﾜｯｼｬ	2	
5	214A6-42121		RUBBER,SEAL	ﾗﾊﾞｰ	1	
6	239A6-42291		RUBBER,RADIATOR-COV.	ﾗﾊﾞｰ	1	
7	234A6-43121		RUBBER	ﾗﾊﾞｰ	2	

FIG.169A RADIATOR COVER

(F5026431) ﾗｼﾞｴｰﾀｶﾊﾞｰ

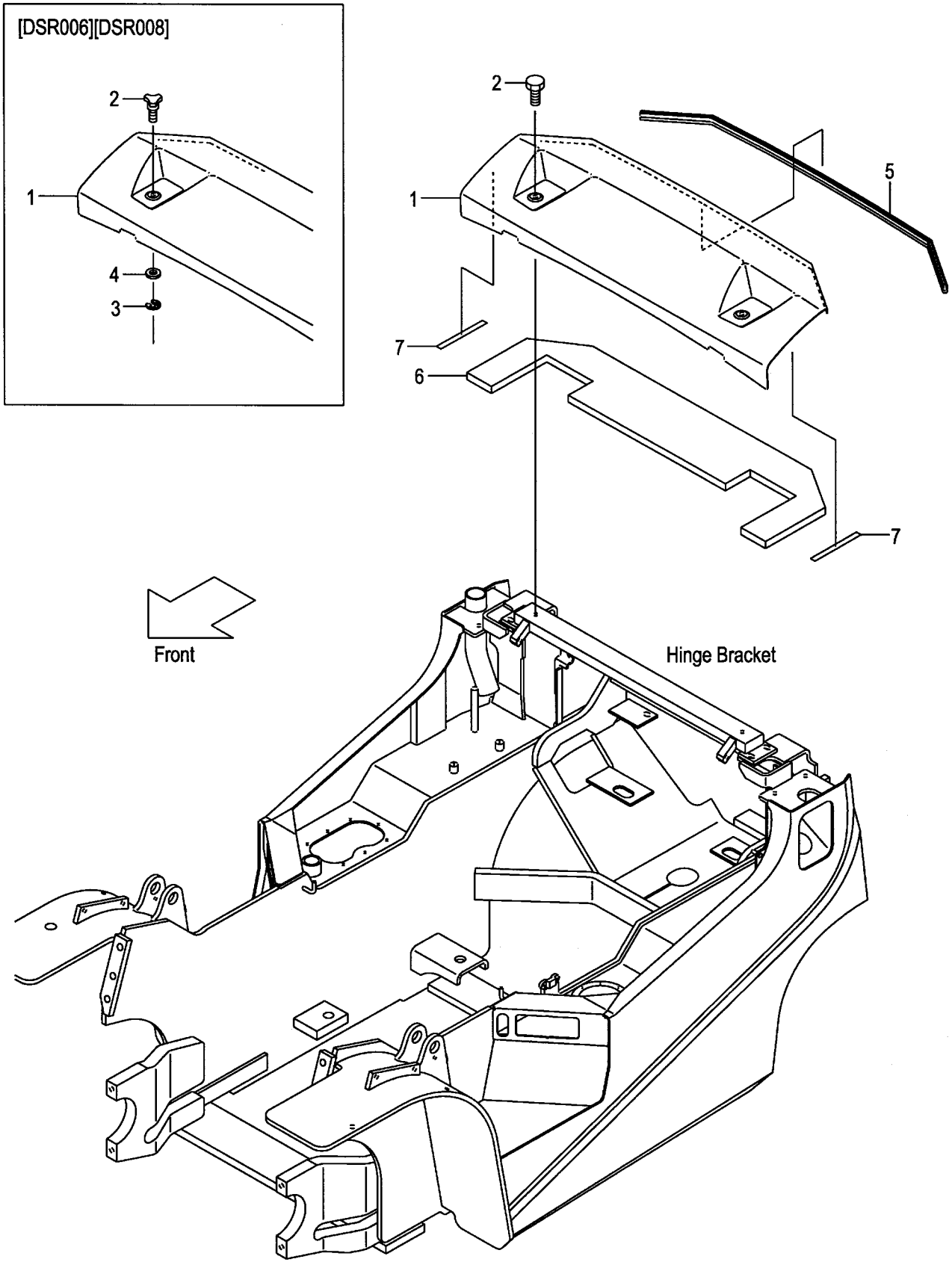

A:FG20C17 FG20T17 FG25C17 FG25T17:11028- D:FG20W6 FG25W6:65600- G:FD20T6 FD25T6:84230-
B:FG20C6 FG25C6:65600- E:FD20C17 FD20T17 FD25C17 FD25T17:11012- H:FD20W6 FD25W6:84230-
C:FG20T6 FG25T6:65600- F:FD20C6 FD25C6:84230-

FIG.169A

(F5026431)

Item No	Part No.	Mark	Description		Req'd	Remarks : Serial No.
1	239A6-40301		COVER,RADIATOR	ｶﾊﾞｰ	1	
-	539A5-42351		COVER,RADIATOR	ｶﾊﾞｰ	1	B,C,D,F,G,H [AW061]
2	01181-08016		BOLT	ﾎﾞﾙﾄ	2	
-	222A6-42451		BOLT,KNOB	ﾎﾞﾙﾄ	2	A:11045- B,C,D:67182- E:11022- F,G,H:85861- [DSR006][DSR008]
3	222A6-42461		E-RING	Eﾘﾝｸﾞ	2	A:11045- B,C,D:67182- E:11022- F,G,H:85861- [DSR006][DSR008]
4	02000-00008		WASHER	ﾜｯｼｬ	2	A:11045- B,C,D:67182- E:11022- F,G,H:85861- [DSR006][DSR008]
5	214A6-42121		RUBBER,SEAL	ﾗﾊﾞｰ	1	
6	239A6-42291		RUBBER,RADIATOR-COV.	ﾗﾊﾞｰ	1	
7	234A6-43121		RUBBER	ﾗﾊﾞｰ	2	

FIG.170 RADIATOR COVER [RW]

(F5026440) ﾗｼﾞｴｰﾀｶﾊﾞｰ

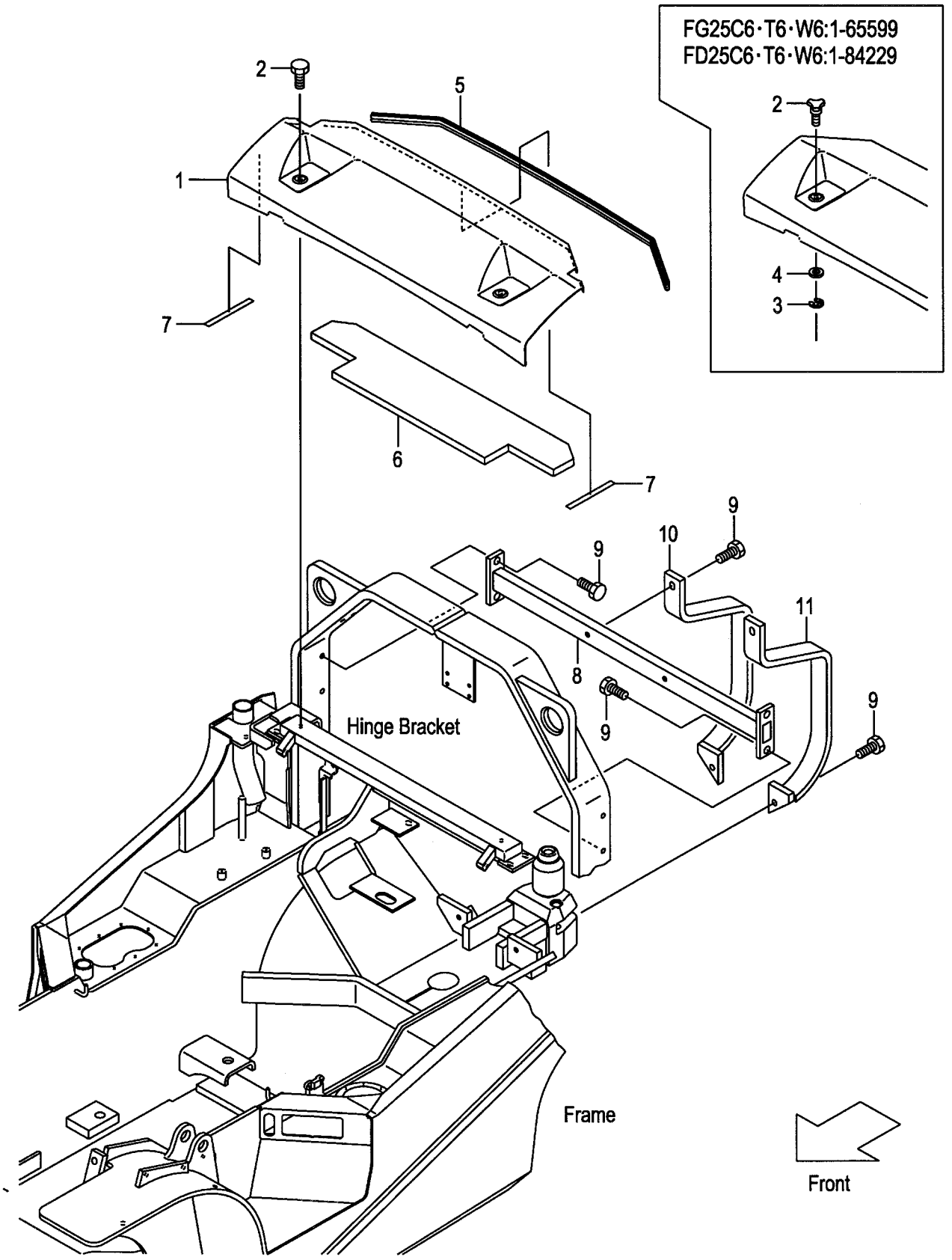

A:FG25C6 FG25T6 FG25W6
B:FD25C6 FD25T6 FD25W6

Item No	Part No.	Mark	Description		Req'd	Remarks : Serial No.
1	539C1-92301		COVER,RADIATOR	ｶﾊﾞｰ	1	[RW]
2	222A6-42451		BOLT,KNOB	ﾎﾞﾙﾄ	2	A:1-65599 B:1-84229 [RW]
-	01181-08016		BOLT	ﾎﾞﾙﾄ	2	A:65600- B:84230- [RW]
3	222A6-42461		E-RING	Eﾘﾝｸﾞ	2	A:1-65599 B:1-84229 [RW]
4	02000-00008		WASHER	ﾜｯｼｬ	2	A:1-65599 B:1-84229 [RW]
5	214A6-42121		RUBBER,SEAL	ﾗﾊﾞｰ	1	[RW]
6	539C1-92311		RUBBER,RADIATOR-COV.	ﾗﾊﾞｰ	1	[RW]
7	234A6-43121		RUBBER	ﾗﾊﾞｰ	2	[RW]
8	539C1-92401		BAR,TIE	ﾊﾞｰ	1	[RW]
9	01186-12035		BOLT	ﾎﾞﾙﾄ	8	[RW]
10	539C1-92541		GUARD,MUFFLER,RH	ｶﾞｰﾄﾞ	1	[RW]
11	539C1-92551		GUARD,MUFFLER,LH	ｶﾞｰﾄﾞ	1	[RW]

FIG.171 RADIATOR COVER [LPG][LPO][EECLP][CNG]

(F5026450) ﾗｼﾞｴｰﾀｶﾊﾞｰ

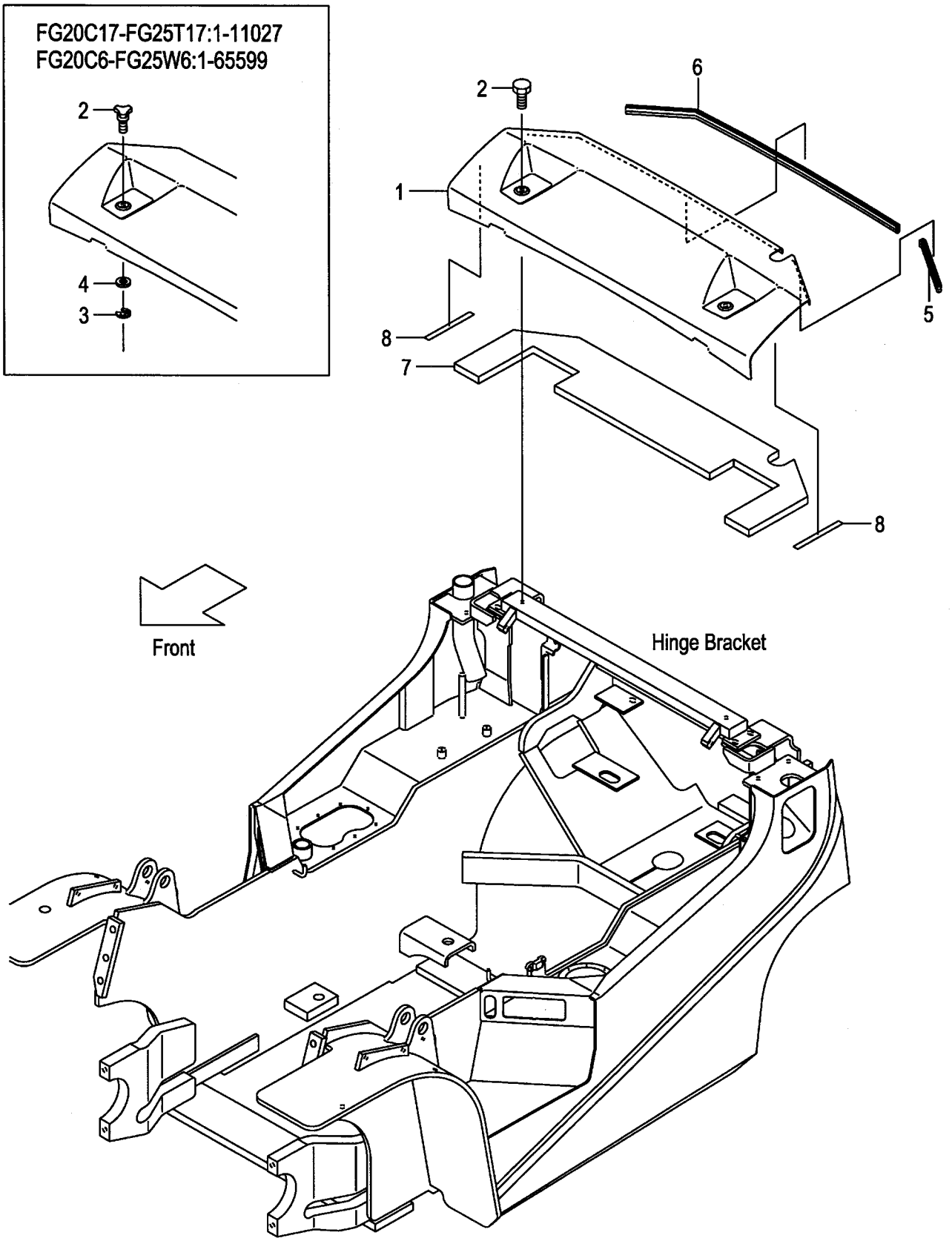

A:FG20C17 FG20T17 FG25C17 FG25T17
B:FG20C6 FG20T6 FG20W6
C:FG25C6 FG25T6 FG25W6

FIG.171
(F5026450)

Item No	Part No.	Mark	Description		Req'd	Remarks : Serial No.
1	537A0-52501		COVER,RADIATOR	ｶﾊﾞｰ	1	[LPG][LPO][EECLP]
-	537A0-52501		COVER,RADIATOR	ｶﾊﾞｰ	1	C [CNG]
2	222A6-42451		BOLT,KNOB	ﾎﾞﾙﾄ	2	A:1-11027 B,C:1-65599 [LPG][LPO][EECLP]
-	01181-08016		BOLT	ﾎﾞﾙﾄ	2	A:11028- B,C:65600- [LPG][LPO][EECLP]
-	222A6-42451		BOLT,KNOB	ﾎﾞﾙﾄ	2	C:1-65599 [CNG]
-	01181-08016		BOLT	ﾎﾞﾙﾄ	2	C:65600- [CNG]
3	222A6-42461		E-RING	Eﾘﾝｸﾞ	2	A:1-11027 B,C:1-65599 [LPG][LPO][EECLP]
-	222A6-42461		E-RING	Eﾘﾝｸﾞ	2	C:1-65599 [CNG]
4	02000-00008		WASHER	ﾜｯｼｬ	2	A:1-11027 B,C:1-65599 [LPG][LPO][EECLP]
-	02000-00008		WASHER	ﾜｯｼｬ	2	C:1-65599 [CNG]
5	537A0-52521		RUBBER,SEAL	ﾗﾊﾞｰ	1	[LPG][LPO][EECLP]
-	537A0-52521		RUBBER,SEAL	ﾗﾊﾞｰ	1	C [CNG]
6	537A0-52531		RUBBER,SEAL	ﾗﾊﾞｰ	1	[LPG][LPO][EECLP]
-	537A0-52531		RUBBER,SEAL	ﾗﾊﾞｰ	1	C [CNG]
7	537A0-52511		RUBBER,RADIATOR-COV.	ﾗﾊﾞｰ	1	[LPG][LPO][EECLP]
-	537A0-52511		RUBBER,RADIATOR-COV.	ﾗﾊﾞｰ	1	C [CNG]
8	234A6-43121		RUBBER	ﾗﾊﾞｰ	2	[LPG][LPO][EECLP]
-	234A6-43121		RUBBER	ﾗﾊﾞｰ	2	C [CNG]

FIG.172 RADIATOR COVER [SCB001][SCBCR]

(F5026460) ﾗｼﾞｴｰﾀｶﾊﾞｰ

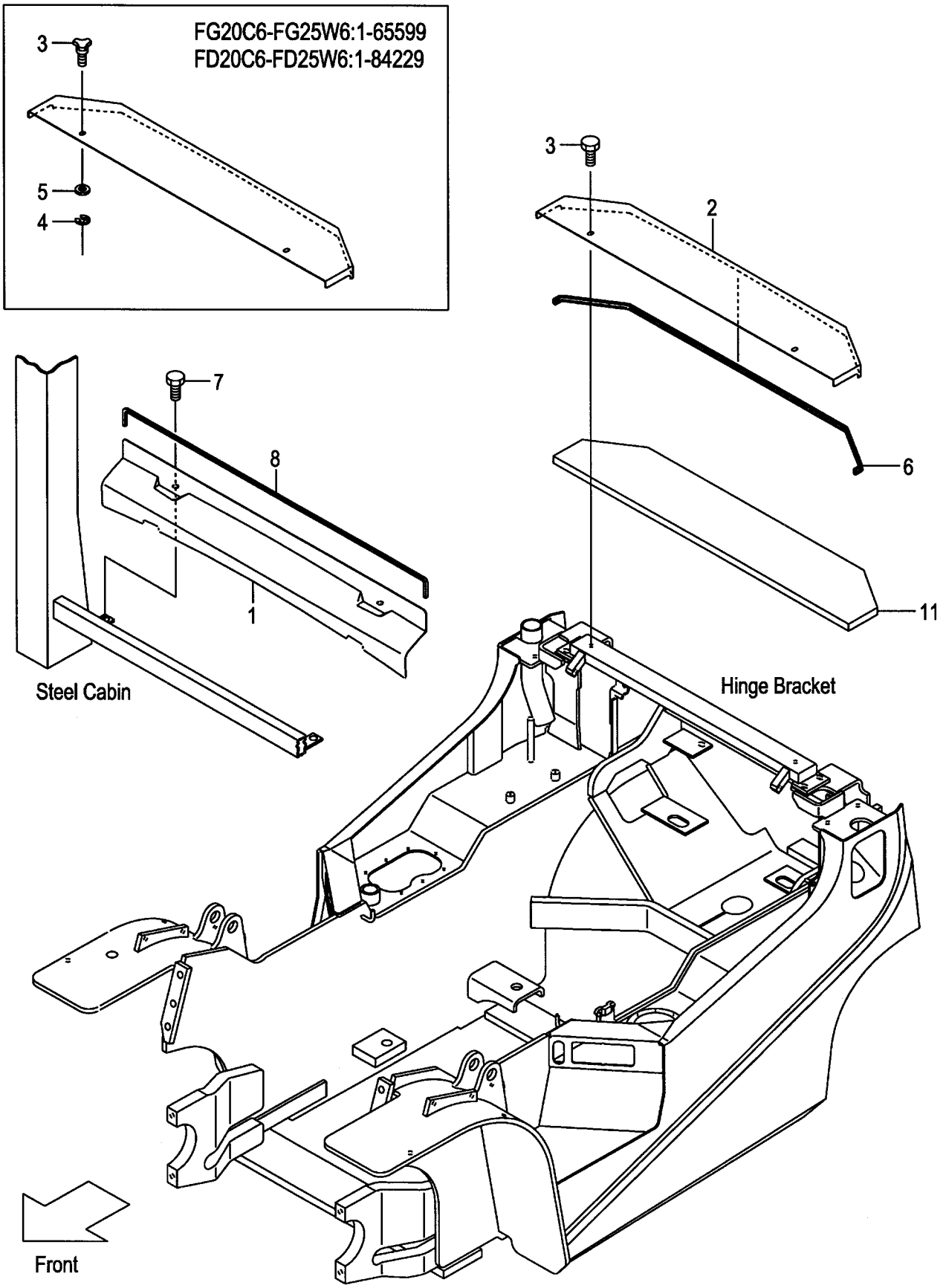

A:FG20C6 FG20T6 FG25C6 FG25T6 FG20W6 FG25W6
B:FD20C6 FD20T6 FD25C6 FD25T6 FD20W6 FD25W6

Item No	Part No.	Mark	Description		Req'd	Remarks : Serial No.
1	539A5-32311		COVER,RADIATOR,FRONT	ｶﾊﾞｰ	1	[SCB001][SCBCR]
2	539A5-32201		COVER,RADIATOR,REAR	ｶﾊﾞｰ	1	[SCB001]
-	539A7-62201		COVER,RADIATOR,REAR	ｶﾊﾞｰ	1	[SCBCR]
3	222A6-42451		BOLT,KNOB	ﾎﾞﾙﾄ	2	A:1-65599 B:1-84229 [SCB001][SCBCR]
-	01181-08016		BOLT	ﾎﾞﾙﾄ	2	A:65600- B:84230 [SCB001][SCBCR]
4	222A6-42461		E-RING	Eﾘﾝｸﾞ	2	A:1-65599 B:1-84229 [SCB001][SCBCR]
5	02000-00008		WASHER	ﾜｯｼｬ	2	A:1-65599 B:1-84229 [SCB001][SCBCR]
6	214T6-42091		RUBBER,SEAL	ﾗﾊﾞｰ	1	[SCB001][SCBCR]
7	01185-08020		BOLT	ﾎﾞﾙﾄ	2	[SCB001][SCBCR]
8	25816-42761		RUBBER,SEAL	ﾗﾊﾞｰ	1	[SCB001][SCBCR]
9	539A5-32651	+	WIRE,LEAD,KEY-SWITCH	ﾜｲﾔ	1	[SCB001][SCBCR]
10	229F2-42141	+	WIRE-HARNESS,R-COMB.	ﾜｲﾔﾊｰﾈｽ	1	[SCB001][SCBCR]
11	539A5-32541		RUBBER,RADIATOR-COV.	ﾗﾊﾞｰ	1	[SCB001][SCBCR]

FIG.173 BONNET HINGE

(F5026470) ﾎﾞﾝﾈｯﾄﾋﾝｼﾞ

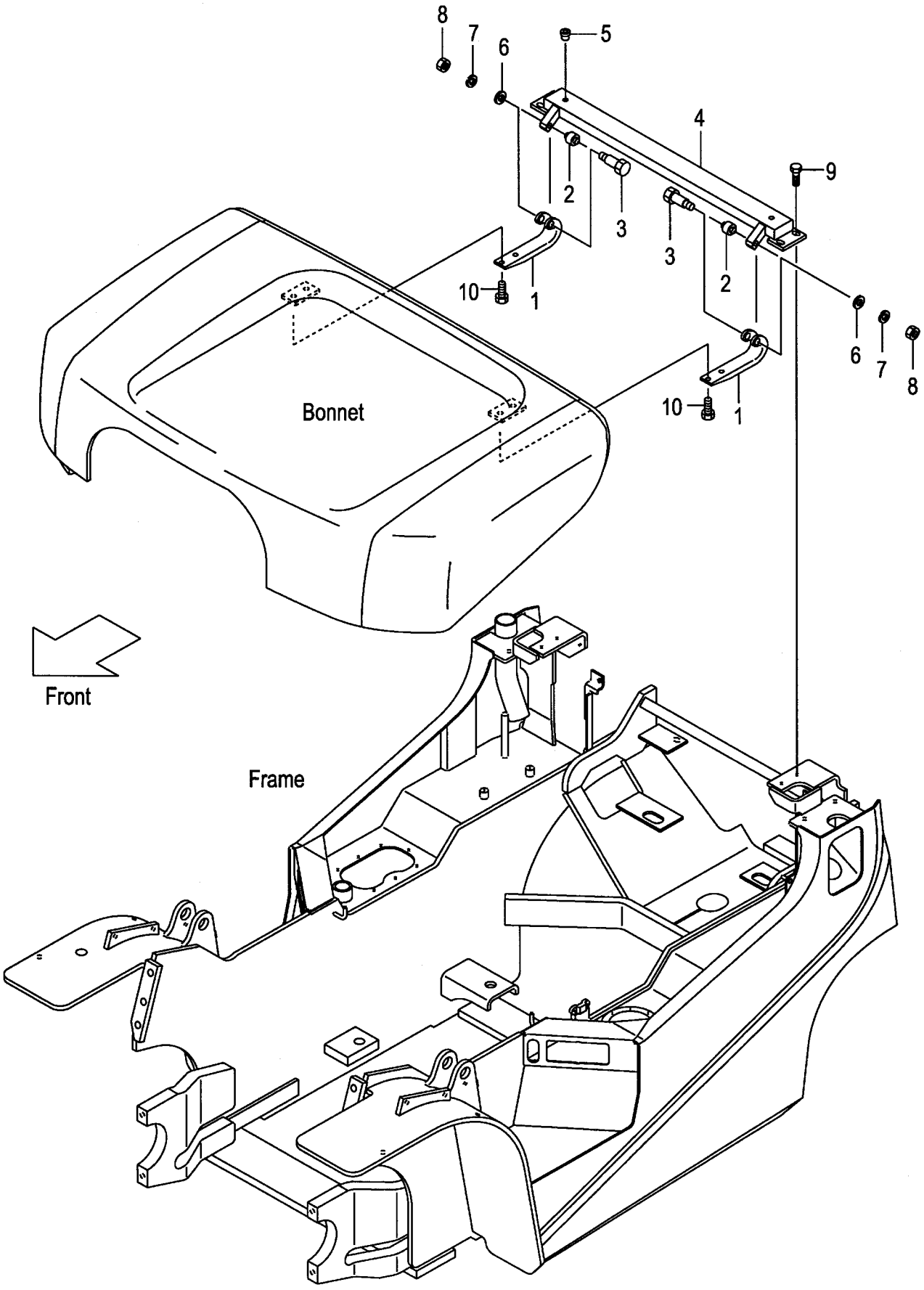

A:FG20C17 FG20T17 FG25C17 FG25T17 D:FD20C17 FD20T17 FD25C17 FD25T17
B:FG20C6 FG20T6 FG25C6 FG25T6 E:FD20C6 FD20T6 FD25C6 FD25T6
C:FG20W6 FG25W6 F:FD20W6 FD25W6

FIG.173
(F5026470)

Item No	Part No.	Mark	Description		Req'd	Remarks : Serial No.
1	216G6-42911		HINGE	ﾋﾝｼﾞ	2	
2	216G6-43601		BUSHING	ﾌﾞｯｼﾝｸﾞ	2	A:1-11048 B,C:1-66574 D:1-11024 E,F:1-86109
3	216G6-42931		BOLT	ﾎﾞﾙﾄ	2	
4	218G6-42301		BRACKET,HINGE	ﾌﾞﾗｹｯﾄ	1	A:1-11048 B,C:1-66574 D:1-11024 E,F:1-86109
-	218G6-42302		BRACKET,HINGE	ﾌﾞﾗｹｯﾄ	1	A:11049- B,C:66575- D:11025- E,F:86110-
-	539H6-52201		BRACKET,HINGE	ﾌﾞﾗｹｯﾄ	1	C:1-66574 F:1-86109 [DSR006][DSR008]
-	539H6-52202		BRACKET,HINGE	ﾌﾞﾗｹｯﾄ	1	C:66575- F:86110- [DSR006][DSR008]
5	514A5-12011		RIVET,POP	ﾘﾍﾞｯﾄ	2	
6	02000-00006		WASHER	ﾜｯｼｬ	2	
7	02010-00006		WASHER	ﾜｯｼｬ	2	
8	01400-00006		NUT	ﾅｯﾄ	2	
9	01186-10020		BOLT	ﾎﾞﾙﾄ	4	
10	01183-08016		BOLT	ﾎﾞﾙﾄ	4	

FIG.174 FLOOR BOARD

(F5026480) ﾌﾛｱﾎﾞｰﾄﾞ

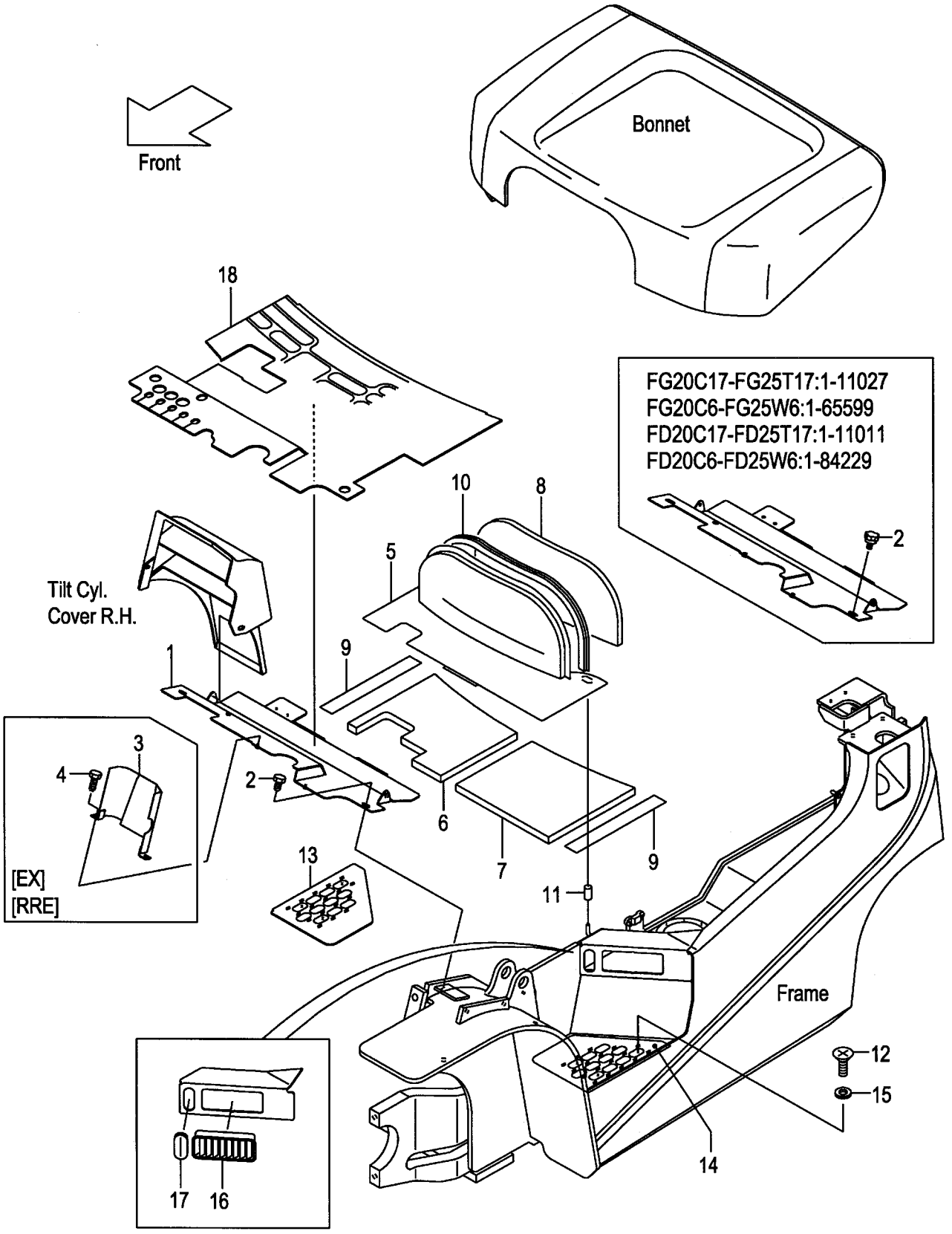

A:FG20C17 FG25C17 D:FG20T6 FG25T6 G:FD20T17 FD25T17 K:FD20W6 FD25W6
B:FG20T17 FG25T17 E:FG20W6 FG25W6 H:FD20C6 FD25C6
C:FG20C6 FG25C6 F:FD20C17 FD25C17 J:FD20T6 FD25T6

FIG.174
(F5026480)

Item No	Part No.	Mark	Description		Req'd	Remarks : Serial No.
1	239A6-50112		BOARD,FLOOR,FRONT	ﾎﾞｰﾄﾞ	1	
2	256C5-12671		BOLT,KNOB	ﾎﾞﾙﾄ	2	A,B:1-11027 C,D,E:1-65599 F,G:1-11011 H,J:1-84229
-	01181-08016		BOLT	ﾎﾞﾙﾄ	2	A,B:11028- C,D,E:65600- F,G:11012- H,J:84230-
3	239A6-52601		COVER,FRONT	ｶﾊﾞｰ	1	C,H [EX]
-	239A6-52601		COVER,FRONT	ｶﾊﾞｰ	1	A,C,E,F,H,K [RRE]
-	239B6-52601		COVER,FRONT	ｶﾊﾞｰ	1	D,J [EX]
-	239B6-52601		COVER,FRONT	ｶﾊﾞｰ	1	B,D,G,J [RRE]
4	01186-06012		BOLT	ﾎﾞﾙﾄ	2	C,D,H,J [EX]
-	01186-06012		BOLT	ﾎﾞﾙﾄ	2	[RRE]
5	239A6-50302		BOARD,FLOOR,REAR	ﾎﾞｰﾄﾞ	1	A,C,E,F,H,K
-	239B6-50302		BOARD,FLOOR,REAR	ﾎﾞｰﾄﾞ	1	B,D,G,J
6	239A6-52131		INSULATOR,REAR,RH	ｲﾝｼｭﾚｰﾀ	1	
7	239A6-52141		INSULATOR,REAR,LH	ｲﾝｼｭﾚｰﾀ	1	
8	216G6-52231		INSULATOR,REAR	ｲﾝｼｭﾚｰﾀ	1	
9	239A6-52171		RUBBER,SEAL	ﾗﾊﾞｰ	2	
10	216G6-52271		EDGING	ｴｯｼﾞﾝｸﾞ	1	
11	216G6-52291		CAP	ｷｬｯﾌﾟ	2	
12	214A6-42911		SCREW	ｽｸﾘｭ	6	
13	234A6-42042		STEP,NON-SKID,RH	ｽﾃｯﾌﾟ	1	
14	234A6-42072		STEP,NON-SKID,LH	ｽﾃｯﾌﾟ	1	
15	02000-20010		WASHER	ﾜｯｼｬ	6	
16	230C1-02041		COVER,AIR-INTAKE	ｶﾊﾞｰ	2	
17	209P7-42161		BOOT,LEVER	ﾌﾞｰﾂ	1	
18	239A6-52221		MAT,FLOOR	ﾏｯﾄ	1	A:1-11029 C,E:1-65732 F:1-11011 H,K:1-84524
-	239A6-52231		MAT,FLOOR	ﾏｯﾄ	1	A:11030- C,E:65733- F:11012- H,K:84525-
-	239B6-52221		MAT,FLOOR	ﾏｯﾄ	1	B:1-11029 D:1-65732 G:1-11011 J:1-84524
-	239B6-52231		MAT,FLOOR	ﾏｯﾄ	1	B:11030- D:65733- G:11012- J:84525-

FIG.175 TRAY
(F5026490) トレー

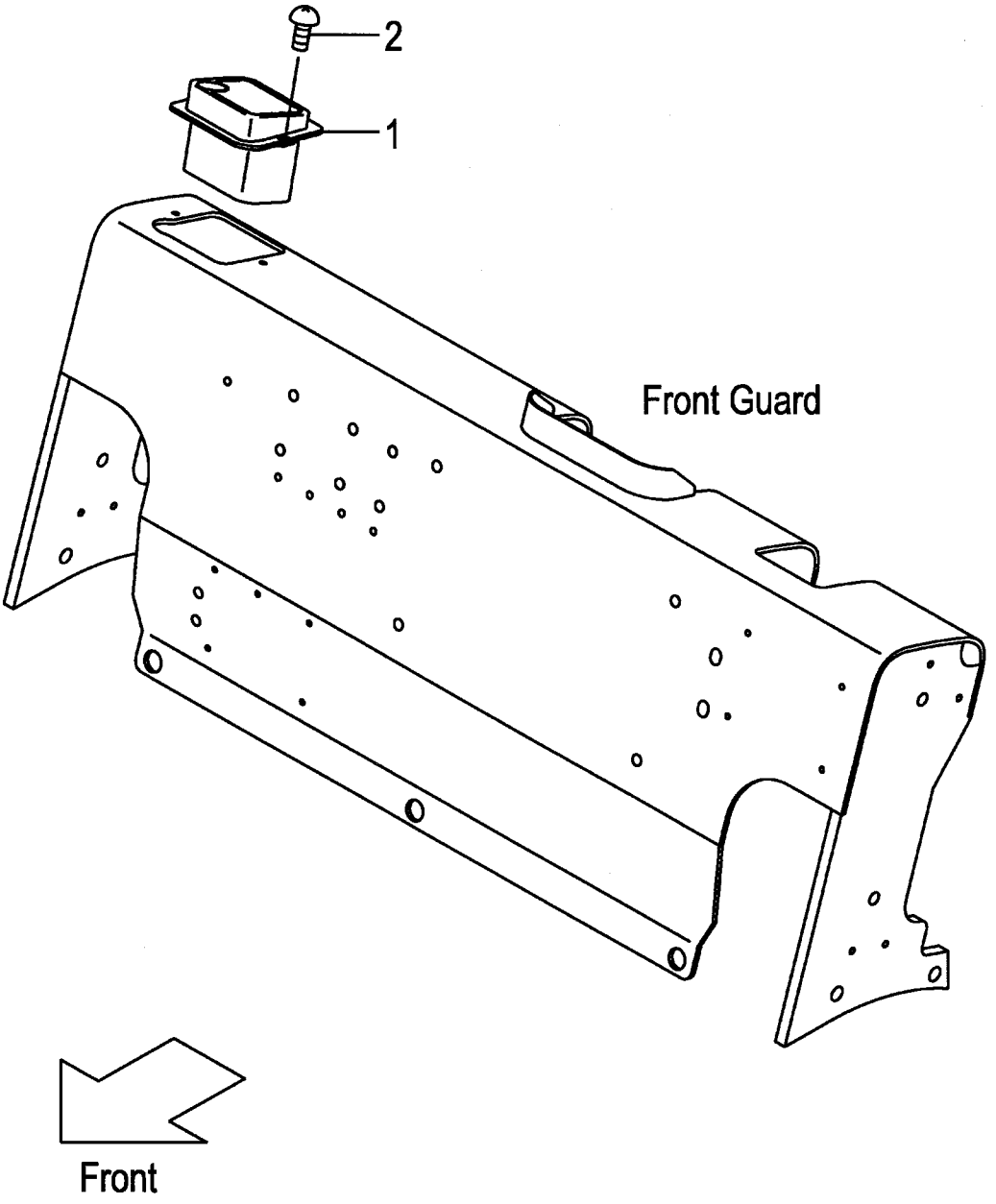

A:FG20C17 FG20T17 FG25C17 FG25T17 C:FD20C17 FD20T17 FD25C17 FD25T17
B:FG20C6 FG20T6 FG25C6 FG25T6 FG20W6 FG25W6 D:FD20C6 FD20T6 FD25C6 FD25T6 FD20W6 FD25W6

Item No	Part No.	Mark	Description	Req'd	Remarks : Serial No.
1	216G9-32001		TRAY トレー	1	
2	214A6-42252		SCREW スクリュ	2	

TRAY

FIG.176 [AW061][AW071][RWL][LPG][LPO][BB SW][BBASW]

(F50264A0) トレー

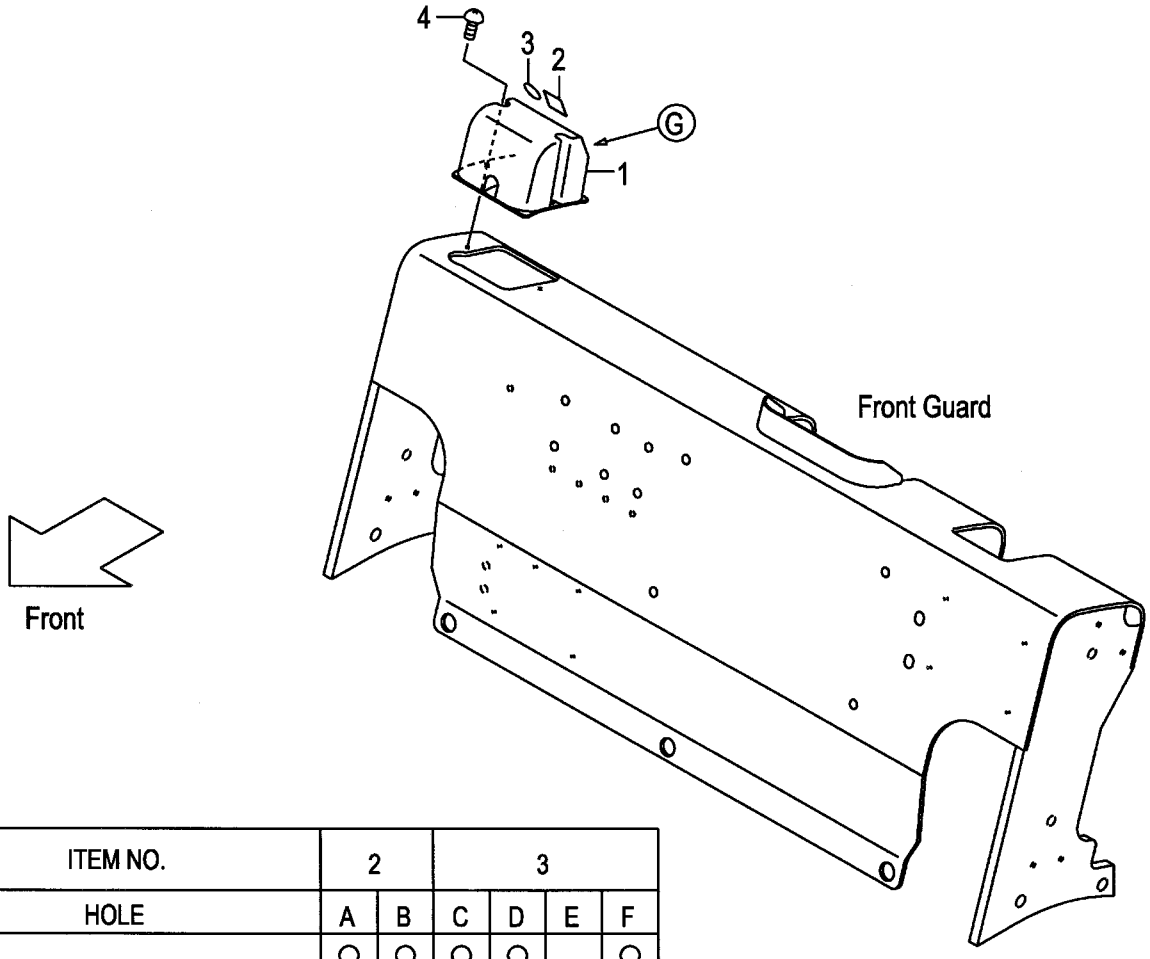

	ITEM NO.	2		3			
	HOLE	A	B	C	D	E	F
OPTION	[AW]	○	○	○	○		○
	[RWL]	○		○	○	○	
	[LPG]		○	○		○	○
	[BB SW][BBASW]	○	○	○	○		○
	[AW/RWL]	○		○	○		
	[AW/LPG]		○	○			○
	[AW/BB SW·BBASW]	○	○		○		○
	[RWL/BB SW·BBASW]	○		○	○		
	[AW/RWL/BB SW·BBASW]	○			○		

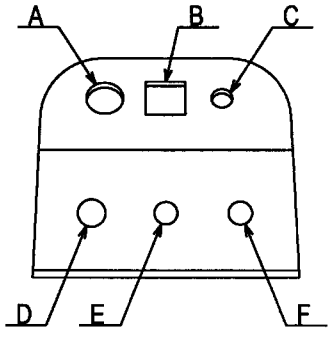

View from G

A:FG20C17 FG20T17 FG25C17 FG25T17 C:FD20C17 FD20T17 FD25C17 FD25T17
B:FG20C6 FG20T6 FG25C6 FG25T6 FG20W6 FG25W6 D:FD20C6 FD20T6 FD25C6 FD25T6 FD20W6 FD25W6

Item No	Part No.	Mark	Description		Req'd	Remarks : Serial No.
1	516G1-42251		BOX,SWITCH	ﾎﾞｯｸｽ	1	[AW061][AW071][RWL][BB SW] [BBASW]
-	516G1-42251		BOX,SWITCH	ﾎﾞｯｸｽ	1	A,B [LPG][LPO][AW061/LPG] [AW071/LPG]
-	516G1-42251		BOX,SWITCH	ﾎﾞｯｸｽ	1	[AW061/RWL][AW071/RWL] [RWL/BB SW][RWL/BBASW]
-	516G1-42251		BOX,SWITCH	ﾎﾞｯｸｽ	1	[AW061/BB SW][AW061/BBASW]
-	516G1-42251		BOX,SWITCH	ﾎﾞｯｸｽ	1	[AW071/BB SW][AW071/BBASW]
-	516G1-42251		BOX,SWITCH	ﾎﾞｯｸｽ	1	[AW061/RWL/BB SW] [AW061/RWL/BBASW]
-	516G1-42251		BOX,SWITCH	ﾎﾞｯｸｽ	1	[AW071/RWL/BB SW] [AW071/RWL/BBASW]
2	229F6-42201		SEAL,PANEL-COVER,A	ｼｰﾙ	2	[AW061][AW071][BB SW][BBASW]
-	229F6-42201		SEAL,PANEL-COVER,A	ｼｰﾙ	1	[RWL]
-	229F6-42201		SEAL,PANEL-COVER,A	ｼｰﾙ	1	A,B [LPG][LPO][AW061/LPG] [AW071/LPG]
-	229F6-42201		SEAL,PANEL-COVER,A	ｼｰﾙ	1	[AW061/RWL][AW071/RWL] [RWL/BB SW][RWL/BBASW]
-	229F6-42201		SEAL,PANEL-COVER,A	ｼｰﾙ	2	[AW061/BB SW][AW061/BBASW]
-	229F6-42201		SEAL,PANEL-COVER,A	ｼｰﾙ	2	[AW071/BB SW][AW071/BBASW]
-	229F6-42201		SEAL,PANEL-COVER,A	ｼｰﾙ	1	[AW061/RWL/BB SW] [AW061/RWL/BBASW]
-	229F6-42201		SEAL,PANEL-COVER,A	ｼｰﾙ	1	[AW071/RWL/BB SW] [AW071/RWL/BBASW]
3	229F6-42211		SEAL,PANEL-COVER,B	ｼｰﾙ	3	[AW061][AW071][RWL][BB SW] [BBASW]
-	229F6-42211		SEAL,PANEL-COVER,B	ｼｰﾙ	3	A,B [LPG][LPO]
-	229F6-42211		SEAL,PANEL-COVER,B	ｼｰﾙ	2	A,B [AW061/LPG][AW071/LPG]
-	229F6-42211		SEAL,PANEL-COVER,B	ｼｰﾙ	2	[AW061/RWL][AW071/RWL] [RWL/BB SW][RWL/BBASW]
-	229F6-42211		SEAL,PANEL-COVER,B	ｼｰﾙ	2	[AW061/BB SW][AW061/BBASW]
-	229F6-42211		SEAL,PANEL-COVER,B	ｼｰﾙ	2	[AW071/BB SW][AW071/BBASW]
-	229F6-42211		SEAL,PANEL-COVER,B	ｼｰﾙ	1	[AW061/RWL/BB SW] [AW061/RWL/BBASW]
-	229F6-42211		SEAL,PANEL-COVER,B	ｼｰﾙ	1	[AW071/RWL/BB SW] [AW071/RWL/BBASW]
4	214A6-42252		SCREW	ｽｸﾘｭ	2	[AW061][AW071][RWL][BB SW] [BBASW]
-	214A6-42252		SCREW	ｽｸﾘｭ	2	A,B [LPG][LPO][AW061/LPG] [AW071/LPG]
-	214A6-42252		SCREW	ｽｸﾘｭ	2	[AW061/RWL][AW071/RWL] [RWL/BB SW][RWL/BBASW]
-	214A6-42252		SCREW	ｽｸﾘｭ	2	[AW061/BB SW][AW061/BBASW]
-	214A6-42252		SCREW	ｽｸﾘｭ	2	[AW071/BB SW][AW071/BBASW]

TRAY

FIG.176 [AW061][AW071][RWL][LPG][LPO][BB SW][BBASW]

(F50264A0) トレー

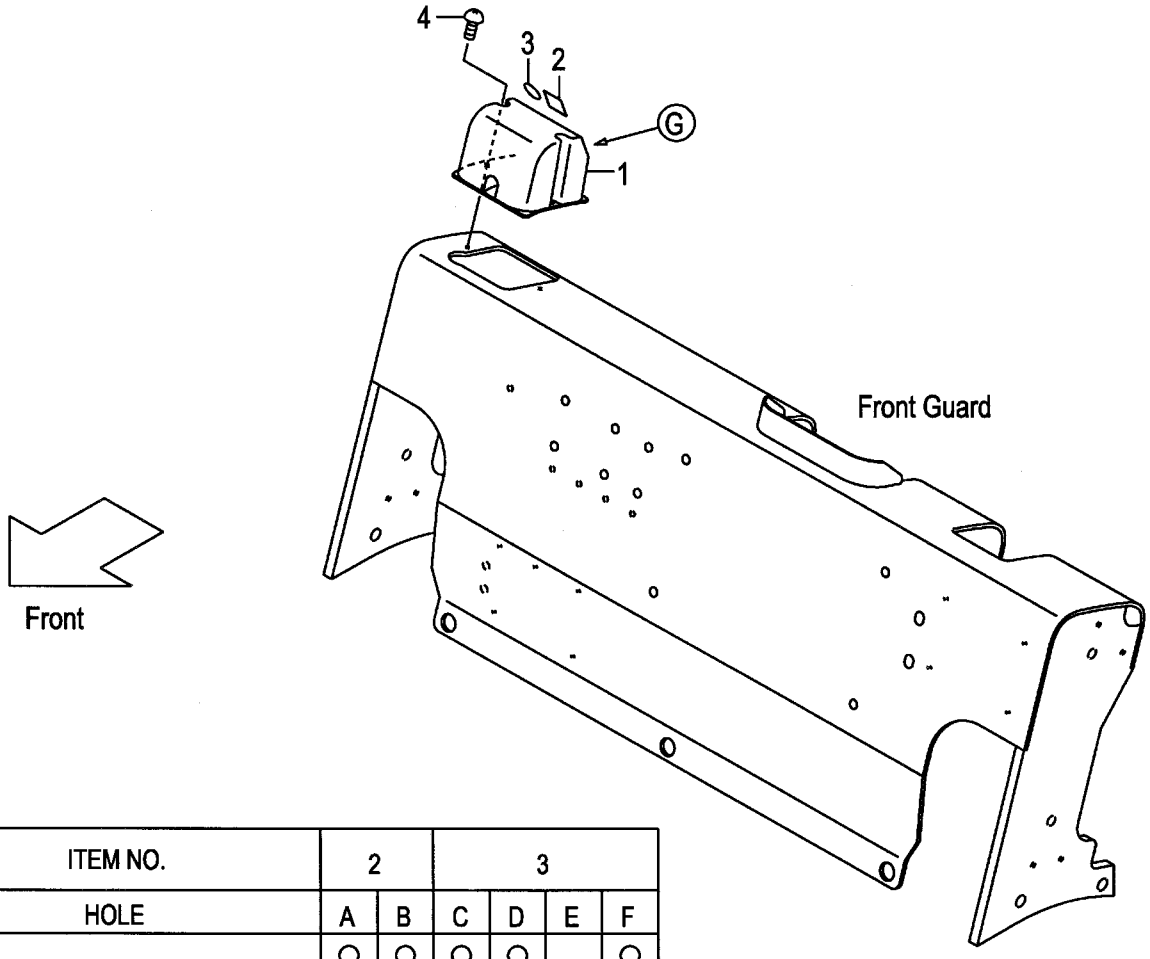

	ITEM NO.	2		3			
	HOLE	A	B	C	D	E	F
OPTION	[AW]	○	○	○	○		○
	[RWL]	○		○	○	○	
	[LPG]		○	○		○	○
	[BB SW][BBASW]	○	○	○	○		○
	[AW/RWL]	○		○	○		
	[AW/LPG]		○	○			○
	[AW/BB SW·BBASW]	○	○		○		○
	[RWL/BB SW·BBASW]	○		○	○		
	[AW/RWL/BB SW·BBASW]	○			○		

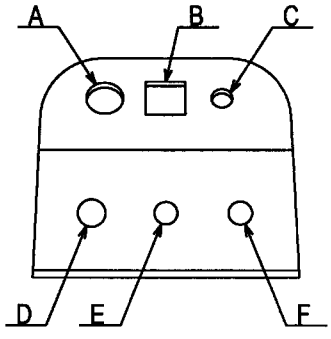

View from G

FIG.176

(F50264A0)

A:FG20C17 FG20T17 FG25C17 FG25T17 C:FD20C17 FD20T17 FD25C17 FD25T17
B:FG20C6 FG20T6 FG25C6 FG25T6 FG20W6 FG25W6 D:FD20C6 FD20T6 FD25C6 FD25T6 FD20W6 FD25W6

Item No	Part No.	Mark	Description	Req'd	Remarks : Serial No.
-	214A6-42252		SCREW ｽｸﾘｭ	2	[AW061/RWL/BB SW] [AW061/RWL/BBASW]
-	214A6-42252		SCREW ｽｸﾘｭ	2	[AW071/RWL/BB SW] [AW071/RWL/BBASW]

FIG.177 TRAY [RWL/LPG][(AW061,AW071)/RWL/LPG]

(F50264B0) トレー

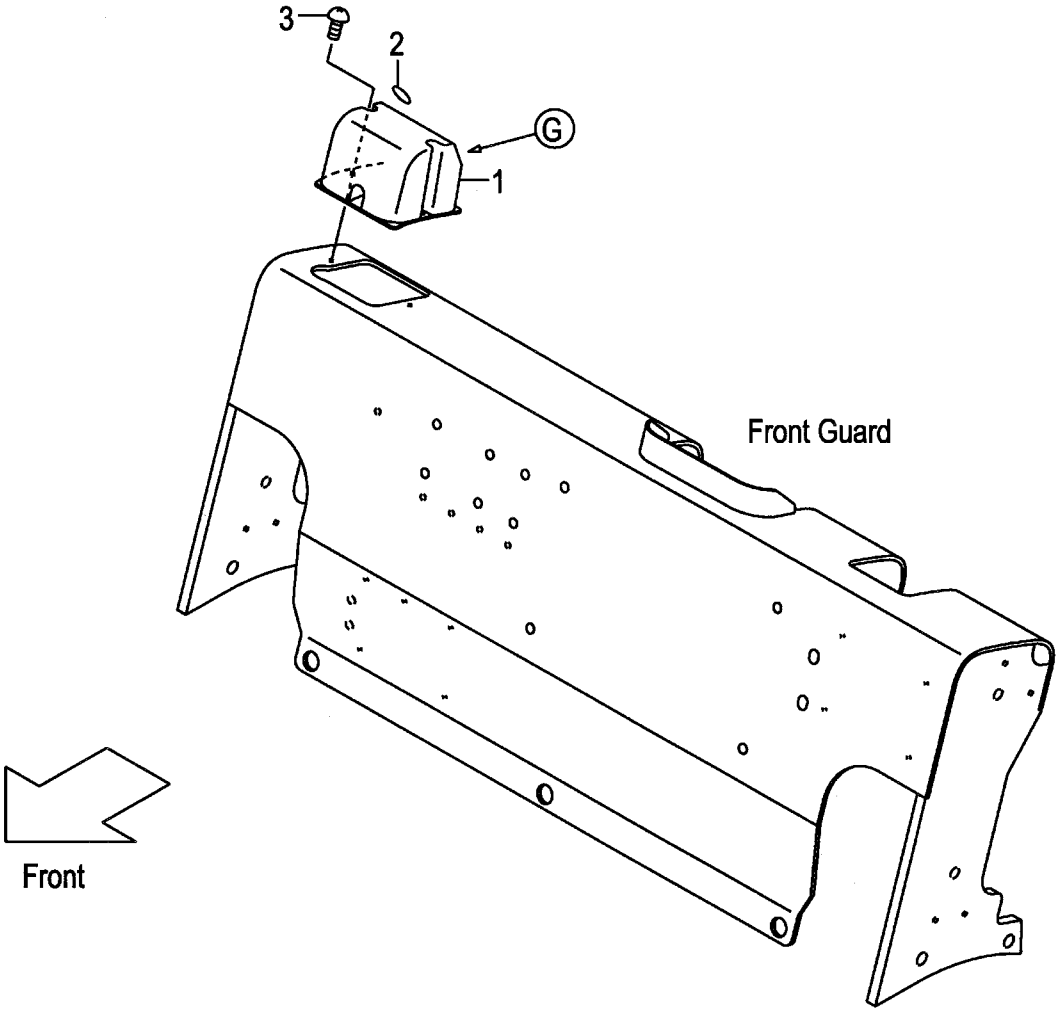

ITEM NO.			2				
HOLE		A	B	C	D	E	F
OPTION	[RWL/LPG]			○		○	
	[AW/RWL/LPG]			○			

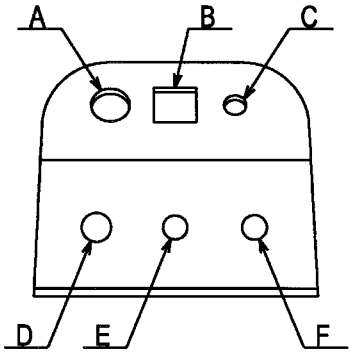

View from G

A:FG20C17 FG20T17 FG25C17 FG25T17
B:FG20C6 FG20T6 FG25C6 FG25T6 FG20W6 FG25W6

Item No	Part No.	Mark	Description		Req'd	Remarks : Serial No.
1	516G1-42251		BOX,SWITCH	ﾎﾞｯｸｽ	1	[RWL/LPG][AW061/RWL/LPG] [AW071/RWL/LPG]
2	229F6-42211		SEAL,PANEL-COVER,B	ｼｰﾙ	2	[RWL/LPG]
-	229F6-42211		SEAL,PANEL-COVER,B	ｼｰﾙ	1	[AW061/RWL/LPG] [AW071/RWL/LPG]
3	214A6-42252		SCREW	ｽｸﾘｭ	2	[RWL/LPG][AW061/RWL/LPG] [AW071/RWL/LPG]

FIG.178 TRAY [SM][AM][TPM]

(F50264C0) トレー

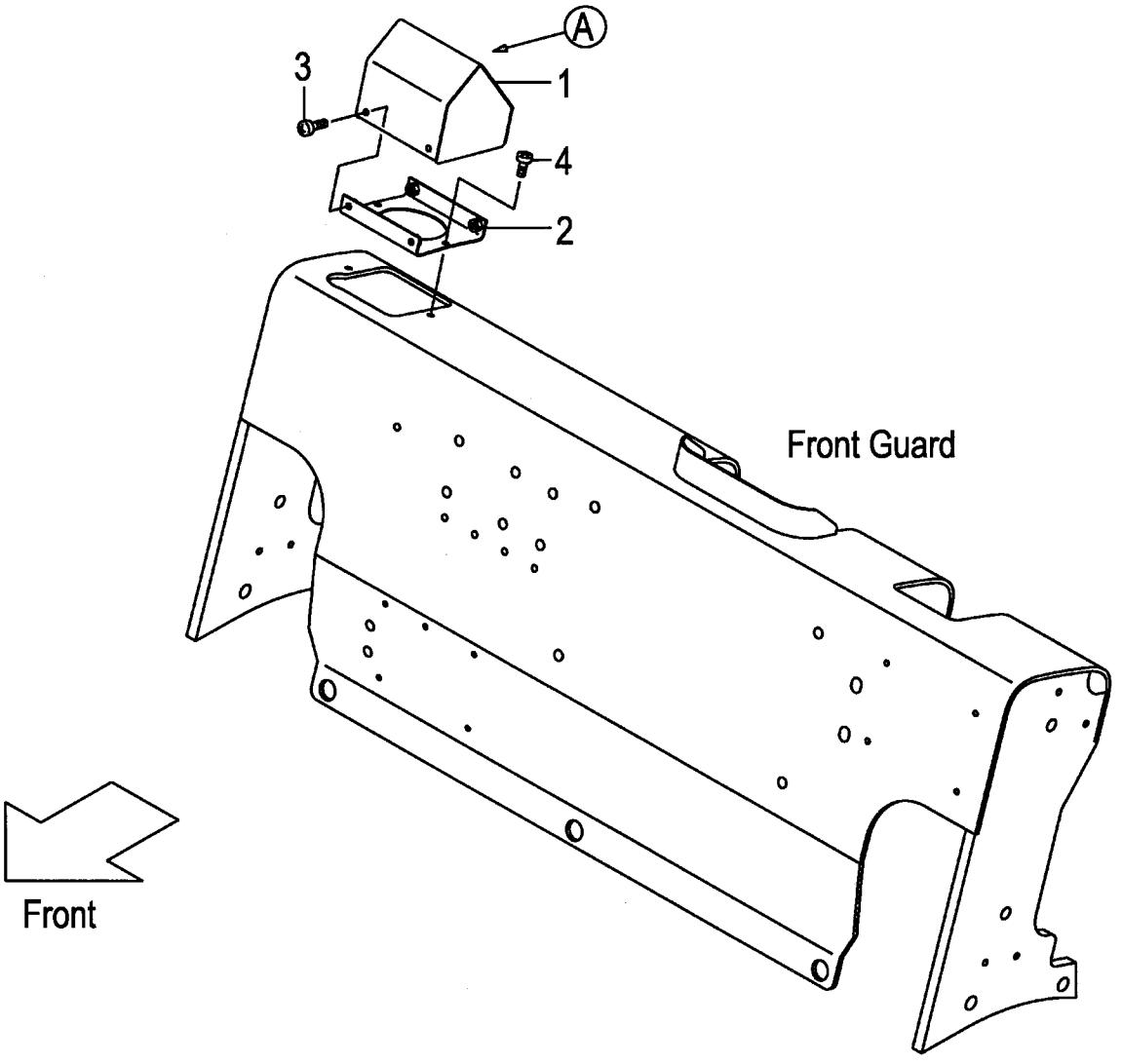

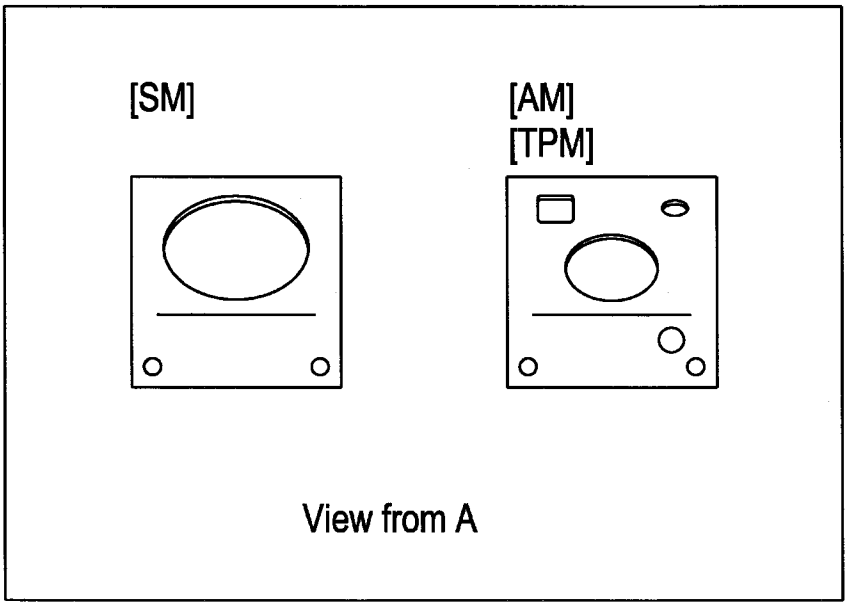

FIG.178

(F50264C0)

A:FG20C17 FG20T17 FG25C17 FG25T17 C:FD20C17 FD20T17 FD25C17 FD25T17
B:FG20C6 FG20T6 FG25C6 FG25T6 FG20W6 FG25W6 D:FD20C6 FD20T6 FD25C6 FD25T6 FD20W6 FD25W6

Item No	Part No.	Mark	Description		Req'd	Remarks : Serial No.
1	516G7-50401		BOX,METER	ﾎﾞｯｸｽ	1	[SM]
-	516G6-90401		BOX,METER	ﾎﾞｯｸｽ	1	[AM][TPM]
2	516G1-42021		BRACKET	ﾌﾞﾗｹｯﾄ	1	[SM][AM][TPM]
3	214A6-42771		SCREW	ｽｸﾘｭ	4	[SM][AM][TPM]
4	214A6-42252		SCREW	ｽｸﾘｭ	2	[SM][AM][TPM]

TRAY [SM/(LPG,BB SW,BBASW)]
FIG.179 [SM/(LPG,BB SW,BBASW)/RWL]

(F50264D0) トレー

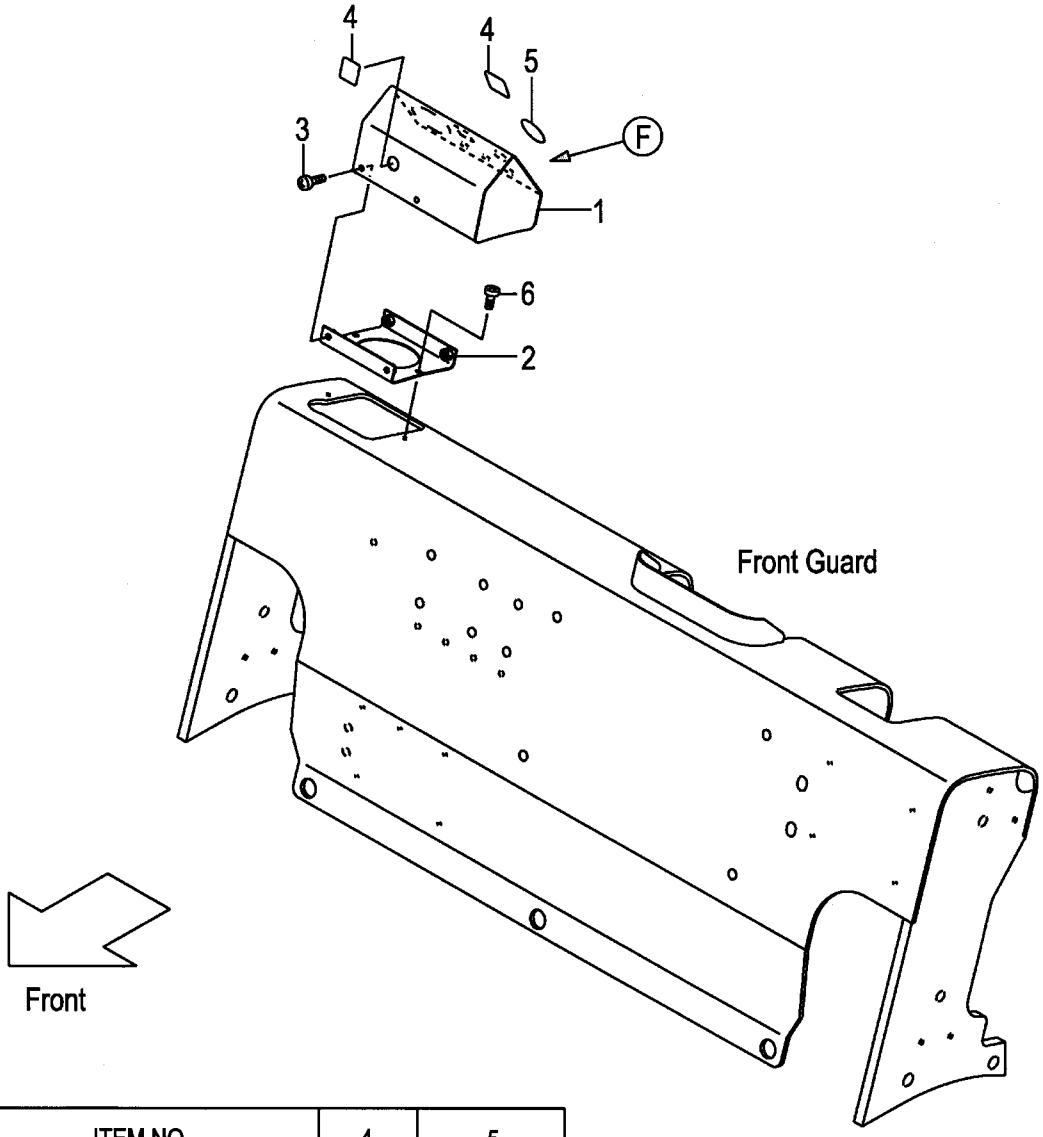

ITEM NO.		4		5		
HOLE		A	B	C	D	E
OPTION	[SM/LPG]		○		○	○
	[SM/BB SW·BBASW]	○	○		○	○
	[SM/LPG/RWL]				○	
	[SM/BB SW·BBASW/RWL]	○			○	

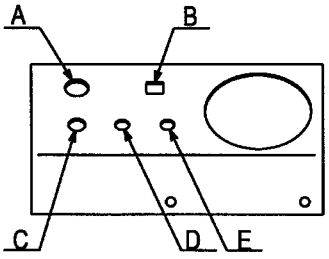

View from F

A:FG20C17 FG20T17 FG25C17 FG25T17 C:FD20C17 FD20T17 FD25C17 FD25T17
B:FG20C6 FG20T6 FG25C6 FG25T6 FG20W6 FG25W6 D:FD20C6 FD20T6 FD25C6 FD25T6 FD20W6 FD25W6

Item No	Part No.	Mark	Description		Req'd	Remarks : Serial No.
1	516G7-50201		BOX,METER & SWITCH	ﾎﾞｯｸｽ	1	A,B [SM/LPG][SM/LPG/RWL]
-	516G7-50201		BOX,METER & SWITCH	ﾎﾞｯｸｽ	1	[SM/BB SW][SM/BBASW] [SM/BB SW/RWL][SM/BBASW/RWL]
2	516G1-42021		BRACKET	ﾌﾞﾗｹｯﾄ	1	A,B [SM/LPG][SM/LPG/RWL]
-	516G1-42021		BRACKET	ﾌﾞﾗｹｯﾄ	1	[SM/BB SW][SM/BBASW] [SM/BB SW/RWL][SM/BBASW/RWL]
3	214A6-42771		SCREW	ｽｸﾘｭ	4	A,B [SM/LPG][SM/LPG/RWL]
-	214A6-42771		SCREW	ｽｸﾘｭ	4	[SM/BB SW][SM/BBASW] [SM/BB SW/RWL][SM/BBASW/RWL]
4	229F6-42201		SEAL,PANEL-COVER,A	ｼｰﾙ	2	A,B [SM/LPG]
-	229F6-42201		SEAL,PANEL-COVER,A	ｼｰﾙ	3	[SM/BB SW][SM/BBASW]
-	229F6-42201		SEAL,PANEL-COVER,A	ｼｰﾙ	1	A,B [SM/LPG/RWL]
-	229F6-42201		SEAL,PANEL-COVER,A	ｼｰﾙ	2	[SM/BB SW/RWL][SM/BBASW/RWL]
5	229F6-42211		SEAL,PANEL-COVER,B	ｼｰﾙ	2	A,B [SM/LPG]
-	229F6-42211		SEAL,PANEL-COVER,B	ｼｰﾙ	2	[SM/BB SW][SM/BBASW]
-	229F6-42211		SEAL,PANEL-COVER,B	ｼｰﾙ	1	A,B [SM/LPG/RWL]
-	229F6-42211		SEAL,PANEL-COVER,B	ｼｰﾙ	1	[SM/BB SW/RWL][SM/BBASW/RWL]
6	214A6-42361		SCREW	ｽｸﾘｭ	2	A,B [SM/LPG][SM/LPG/RWL]
-	214A6-42361		SCREW	ｽｸﾘｭ	2	[SM/BB SW][SM/BBASW] [SM/BB SW/RWL][SM/BBASW/RWL]

FIG.180 TRAY [SM/(AW061,AW071)/RWL]

(F50264E0) トレー

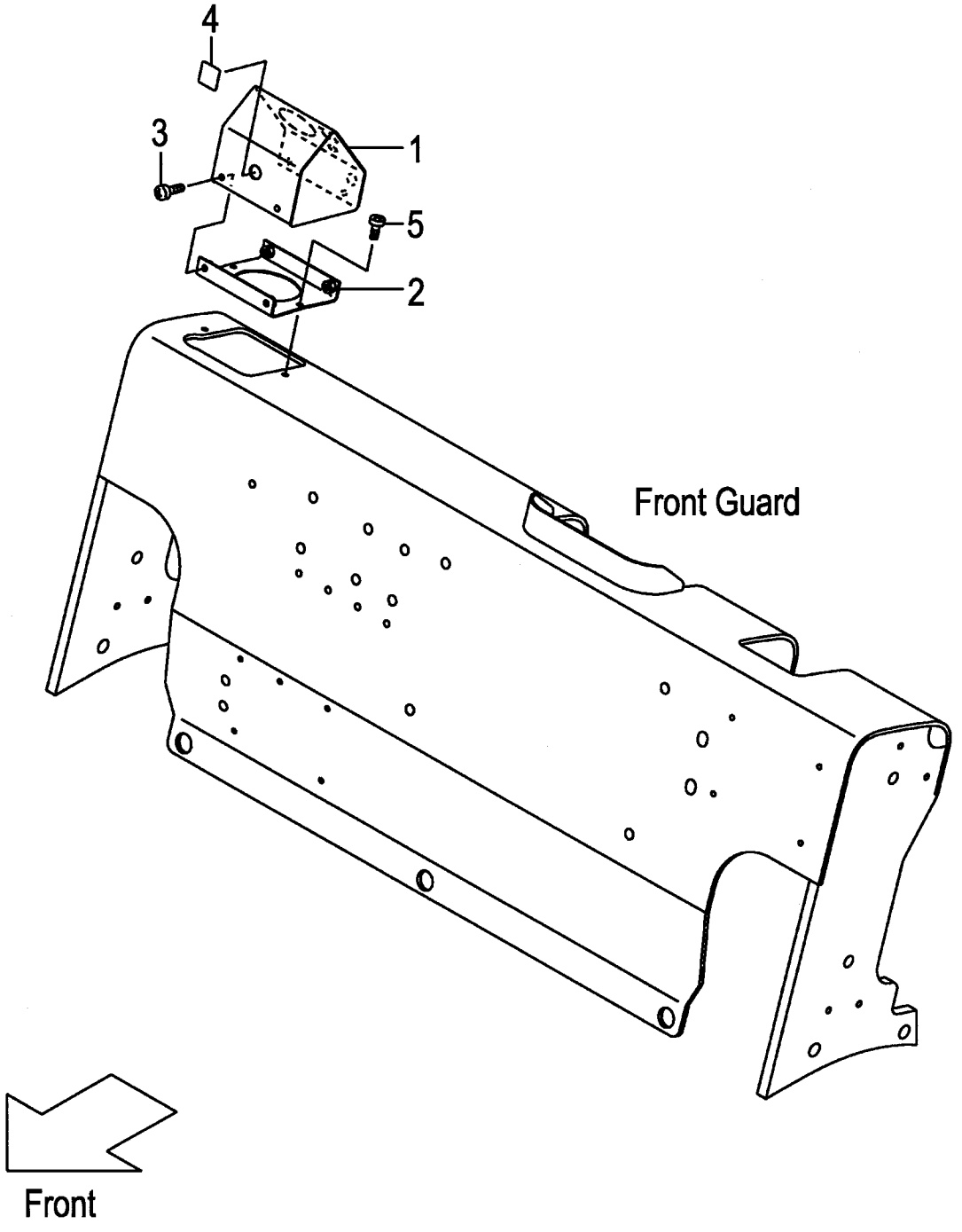

A:FG20C17 FG20T17 FG25C17 FG25T17 C:FD20C17 FD20T17 FD25C17 FD25T17
B:FG20C6 FG20T6 FG25C6 FG25T6 FG20W6 FG25W6 D:FD20C6 FD20T6 FD25C6 FD25T6 FD20W6 FD25W6

Item No	Part No.	Mark	Description		Req'd	Remarks : Serial No.
1	516G7-50211		BOX,METER & SWITCH	ﾎﾞｯｸｽ	1	[SM/AW061/RWL][SM/AW071/RWL]
2	516G1-42021		BRACKET	ﾌﾞﾗｹｯﾄ	1	[SM/AW061/RWL][SM/AW071/RWL]
3	214A6-42771		SCREW	ｽｸﾘｭ	4	[SM/AW061/RWL][SM/AW071/RWL]
4	229F6-42201		SEAL,PANEL-COVER,A	ｼｰﾙ	1	[SM/AW061/RWL][SM/AW071/RWL]
5	214A6-42361		SCREW	ｽｸﾘｭ	2	[SM/AW061/RWL][SM/AW071/RWL]

FIG.181 FRONT GUARD BOOT [FC]

(F50264F0) フロントガードブーツ

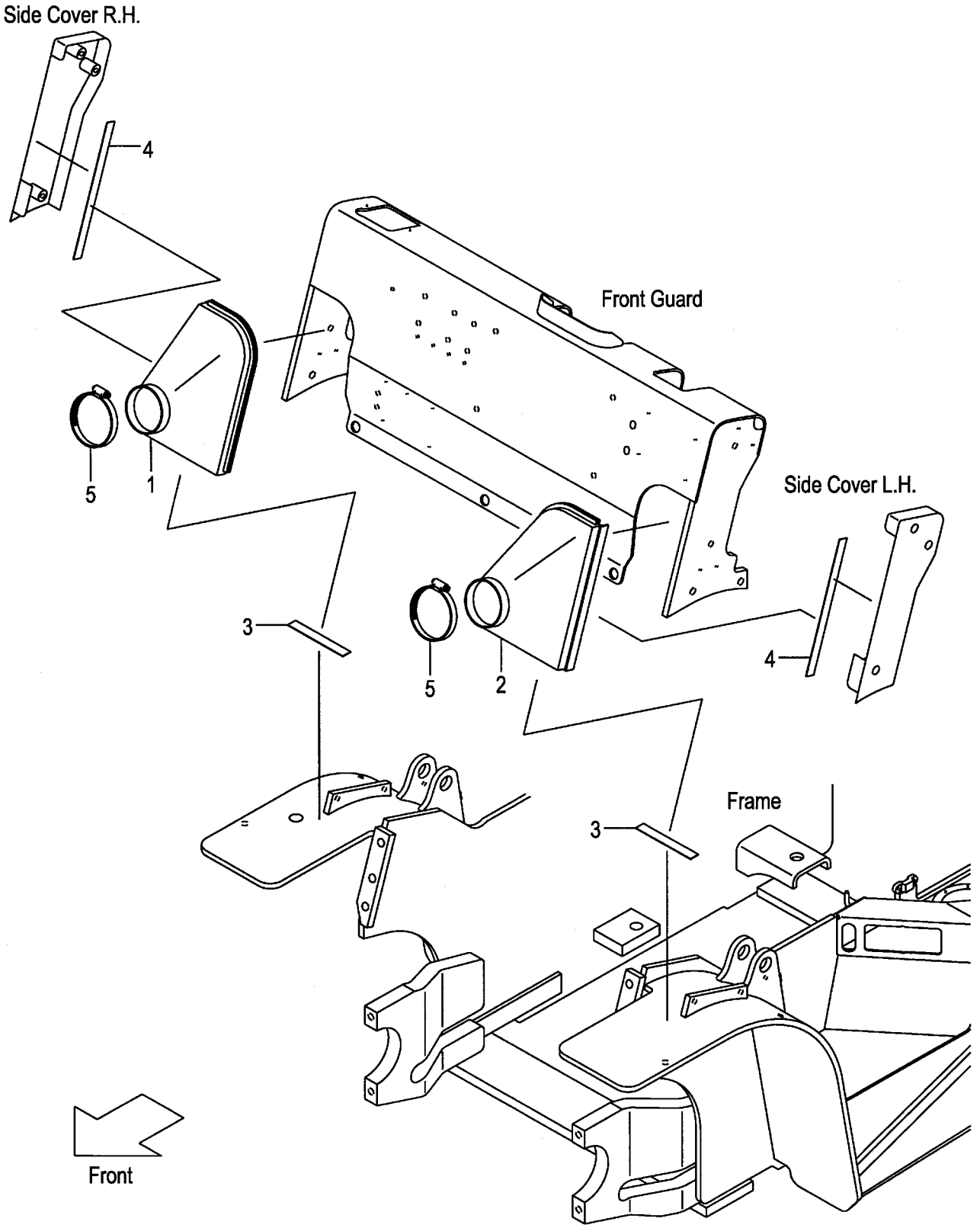

A:FG20C17 FG20T17 FG25C17 FG25T17 C:FD20C17 FD20T17 FD25C17 FD25T17
B:FG20C6 FG20T6 FG25C6 FG25T6 FG20W6 FG25W6 D:FD20C6 FD20T6 FD25C6 FD25T6 FD20W6 FD25W6

Item No	Part No.	Mark	Description		Req'd	Remarks : Serial No.
1	539A5-30251		BOOT,RH	ﾌﾞｰﾂ	1	[FC]
2	539A5-30261		BOOT,LH	ﾌﾞｰﾂ	1	[FC]
3	577H3-72181		TAPE	ﾃｰﾌﾟ	2	[FC]
4	539A5-32301		TAPE	ﾃｰﾌﾟ	2	[FC]
5	539A5-32091		CLAMP,HOSE	ｸﾗﾝﾌﾟ	2	[FC]

FIG.182 SEAT

(F5026810) シート

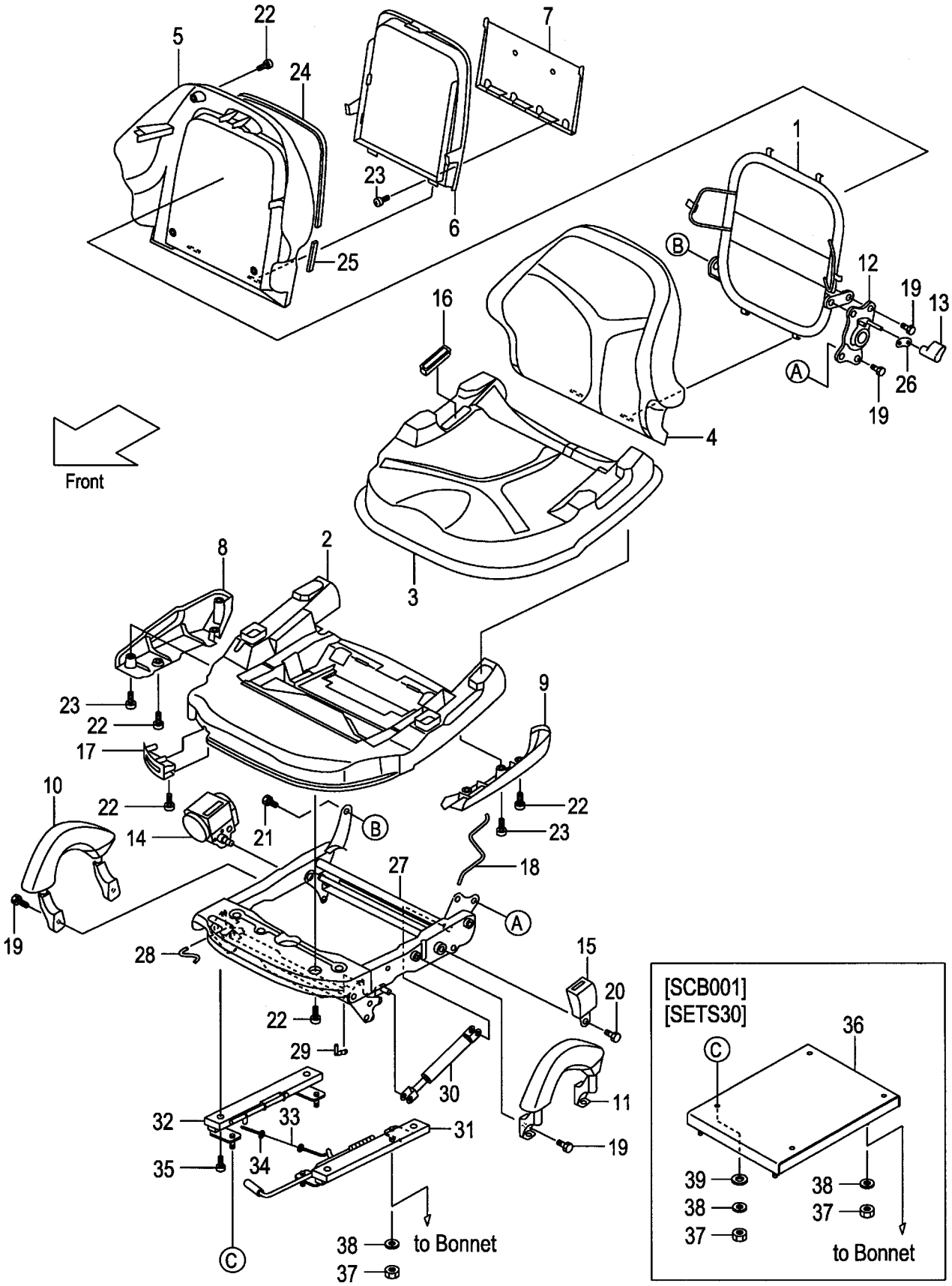

A:FG20C6 FG20T6 FG25C6 FG25T6 FG20W6 FG25W6:1-66921
B:FD20C6 FD20T6 FD25C6 FD25T6 FD20W6 FD25W6:1-87016

Item No	Part No.	Mark	Description		Req'd	Remarks : Serial No.
A1	234A6-81001		SEAT-ASSY	ｼｰﾄｱｯｾﾝ	1	INC.1-35
1	234A6-82001		FRAME	ﾌﾚｰﾑ	1	
2	234A6-82011		PLATE,BOTTOM	ﾌﾟﾚｰﾄ	1	
3	234A6-82021		PAD,CUSHION	ﾊﾟｯﾄﾞ	1	
4	234A6-82031		PAD,BACK	ﾊﾟｯﾄﾞ	1	
5	234A6-82041		COVER	ｶﾊﾞｰ	1	
6	234A6-82051		LID	ﾘｯﾄﾞ	1	
7	234A6-82061		RACK	ﾗｯｸ	1	
8	234A6-82071		COVER,RH	ｶﾊﾞｰ	1	
9	234A6-82081		COVER,LH	ｶﾊﾞｰ	1	
10	234A6-82091		GRIP,RH	ｸﾞﾘｯﾌﾟ	1	
11	234A6-82101		GRIP,LH	ｸﾞﾘｯﾌﾟ	1	
12	234A6-82111		DVC	ﾃﾞｨｰﾌﾞｲｼｰ	1	
13	234A6-82121		KNOB	ﾉﾌﾞ	1	
14	234A6-82131		BELT	ﾍﾞﾙﾄ	1	
15	234A6-82141		BACKLE	ﾊﾞｯｸﾙ	1	
16	234A6-82151		COVER,BELT	ｶﾊﾞｰ	1	
17	234A6-82161		COVER,ADJUSTER	ｶﾊﾞｰ	1	
18	234A6-82171		SPRING	ｽﾌﾟﾘﾝｸﾞ	1	
19	01184-10020		BOLT	ﾎﾞﾙﾄ	8	
20	234A6-82181		BOLT	ﾎﾞﾙﾄ	2	
21	234A6-82191		BOLT	ﾎﾞﾙﾄ	1	
22	234A6-82201		SCREW	ｽｸﾘｭ	14	
23	234A6-82211		SCREW	ｽｸﾘｭ	5	
24	234A6-82221		SEAL,A	ｼｰﾙ	1	
25	234A6-82231		SEAL,B	ｼｰﾙ	2	
26	234A6-82241		MOLE	ﾓｰﾙ	1	
27	234A6-82251		SUSPENSION	ｻｽﾍﾟﾝｼｮﾝ	1	
28	234A6-82502		HOOK,RH	ﾌｯｸ	1	
29	234A6-82512		HOOK,LH	ﾌｯｸ	1	
30	234A6-82551		DAMPER	ﾀﾞﾝﾊﾟ	2	
31	234A6-82261		RAIL,SLIDE A	ﾚｰﾙ	1	
32	234A6-82271		RAIL,SLIDE C	ﾚｰﾙ	1	
33	234A6-82281		CABLE	ｹｰﾌﾞﾙ	1	
34	234A6-82291		WASHER	ﾜｯｼｬ	2	
35	234A6-82301		BOLT	ﾎﾞﾙﾄ	4	
36	534A5-32311		SPACER,SEAT	ｽﾍﾟｰｻ	1	[SCB001][SETS30]
37	01400-00008		NUT	ﾅｯﾄ	4	
-	01400-00008		NUT	ﾅｯﾄ	8	[SCB001][SETS30]
38	02010-00008		WASHER	ﾜｯｼｬ	4	
-	02010-00008		WASHER	ﾜｯｼｬ	8	[SCB001][SETS30]
39	02000-00008		WASHER	ﾜｯｼｬ	4	[SCB001][SETS30]

FIG.182A SEAT

(F5026811) シート

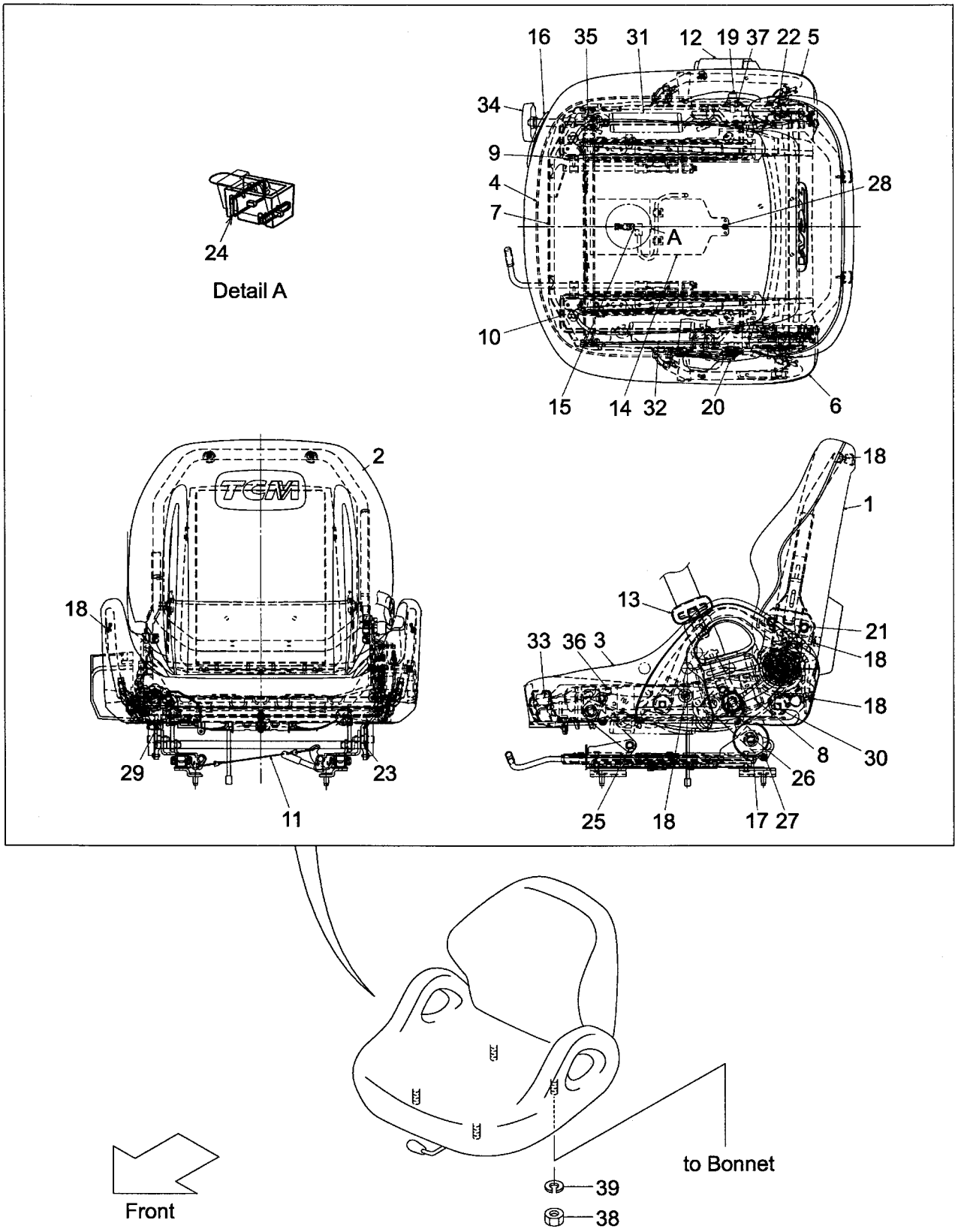

A:FG20C6 FG20T6 FG25C6 FG25T6 FG20W6 FG25W6:66922-
B:FD20C6 FD20T6 FD25C6 FD25T6 FD20W6 FD25W6:87017-

Item No	Part No.	Mark	Description		Req'd	Remarks : Serial No.
A1	242F6-80101		SEAT-ASSY	ｼｰﾄｱｯｾﾝ	1	INC.1-13,16-23,25-37
-	542F3-80101		SEAT-ASSY	ｼｰﾄｱｯｾﾝ	1	(SEAT SW) INC.1-37
1	242F6-82001		BOARD,SEAT-BACK	ﾎﾞｰﾄﾞ	1	
2	242F6-82011		PAD,SEAT-BACK	ﾊﾟｯﾄﾞ	1	
3	242F6-82021		PAD,SEAT-CUSHION	ﾊﾟｯﾄﾞ	1	
4	242F6-82031		PANEL,SEAT-CUSHION	ﾊﾟﾈﾙ	1	
5	242F6-82041		SHIELD,RH	ｼｰﾙﾄﾞ	1	
6	242F6-82051		SHIELD,LH	ｼｰﾙﾄﾞ	1	
7	242F6-82061		FRAME	ﾌﾚｰﾑ	1	
8	242F6-82071		LEVER	ﾚﾊﾞｰ	1	
9	242F6-82081		TRACK,RH	ﾄﾗｯｸ	1	
10	242F6-82091		TRACK,LH	ﾄﾗｯｸ	1	
11	242F6-82101		WIRE	ﾜｲﾔ	1	
12	242F6-82111		BELT,SEAT,OUTER	ﾍﾞﾙﾄ	1	
13	242F6-82121		BELT,SEAT,INNER	ﾍﾞﾙﾄ	1	
14	542F3-82001		PLATE,SEAT-CUSHION	ﾌﾟﾚｰﾄ	1	(SEAT SW)
15	542F3-82011		SWITCH,SEAT	ｽｲｯﾁ	1	(SEAT SW)
16	242F6-82131		CONTROL,SUSPENSION	ｺﾝﾄﾛｰﾙ	1	
17	242F6-82141		ABSORBER,SUSPENSION	ｱﾌﾞｿｰﾊﾞ	2	
18	242F6-82151		SCREW	ｽｸﾘｭ	10	
19	242F6-82161		BOLT	ﾎﾞﾙﾄ	1	
20	242F6-82171		BOLT	ﾎﾞﾙﾄ	1	
21	242F6-82181		BOLT	ﾎﾞﾙﾄ	2	
22	242F6-82191		BOLT	ﾎﾞﾙﾄ	1	
23	242F6-82201		COLLAR	ｶﾗｰ	4	
24	542F3-82021		CLAMP	ｸﾗﾝﾌﾟ	2	(SEAT SW)
25	242F6-82211		BOLT	ﾎﾞﾙﾄ	2	
26	242F6-82221		BOLT	ﾎﾞﾙﾄ	2	
27	242F6-82231		SCREW	ｽｸﾘｭ	4	
28	242F6-82241		SCREW	ｽｸﾘｭ	1	(SEAT SW)
29	242F6-82251		SCREW	ｽｸﾘｭ	2	
30	242F6-82261		BOLT	ﾎﾞﾙﾄ	4	
31	242F6-82271		SPRING,TENSION	ｽﾌﾟﾘﾝｸﾞ	1	
32	242F6-82281		SPRING,TENSION	ｽﾌﾟﾘﾝｸﾞ	1	
33	242F6-82291		SHAFT,SUS-CONTROL	ｼｬﾌﾄ	1	
34	242F6-82301		HANDLE,SUS-CONTROL	ﾊﾝﾄﾞﾙ	1	
35	242F6-82311		PIN	ﾋﾟﾝ	1	
36	242F6-82321		NUT	ﾅｯﾄ	1	
37	242F6-82331		WASHER	ﾜｯｼｬ	1	
38	01400-00008		NUT	ﾅｯﾄ	4	
39	02010-00008		WASHER	ﾜｯｼｬ	4	

FIG.183 SEAT

(F5026820) シート

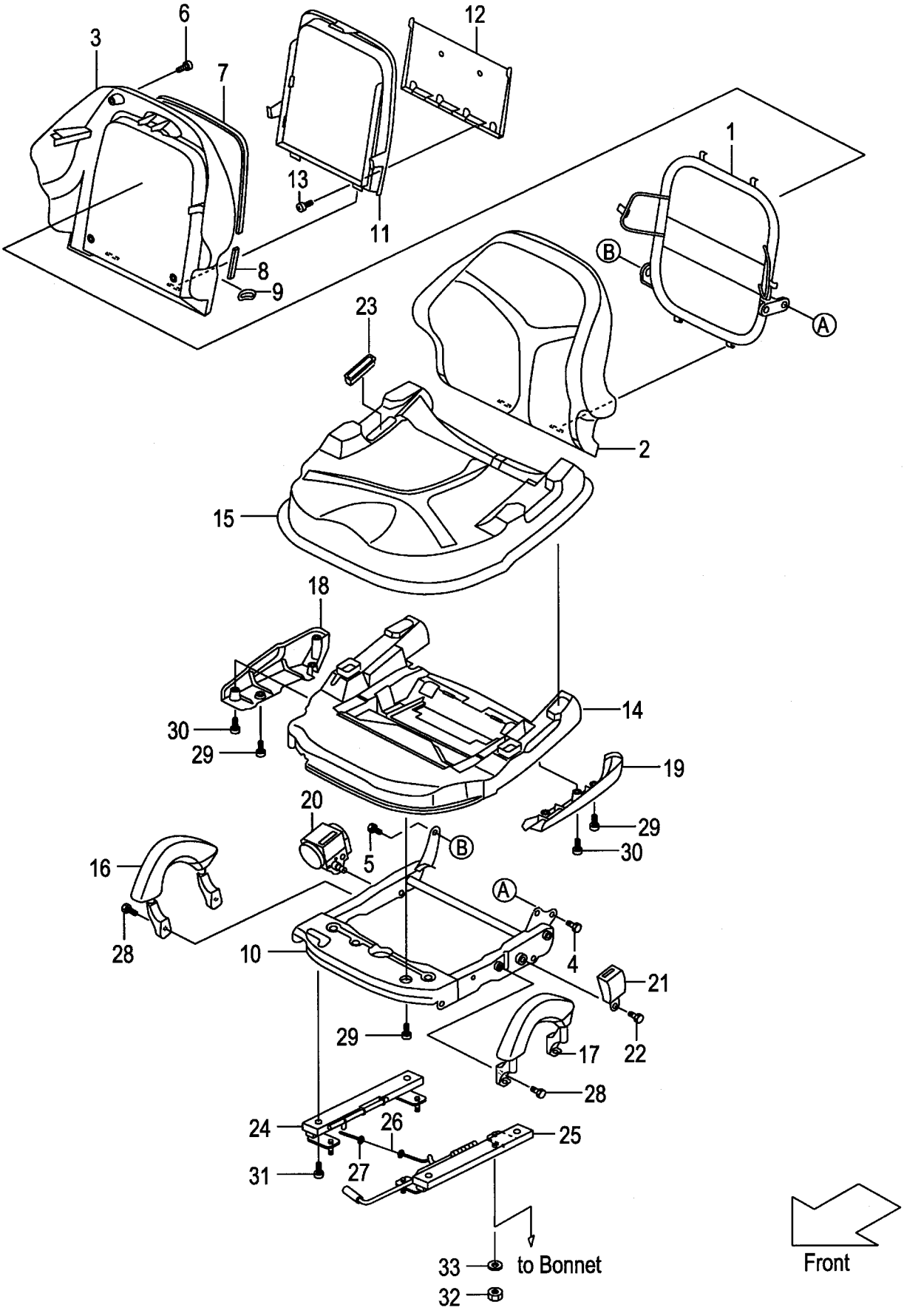

A:FG20C17 FG20T17 FG25C17 FG25T17:1-11061
B:FD20C17 FD20T17 FD25C17 FD25T17:1-11030

Item No	Part No.	Mark	Description		Req'd	Remarks : Serial No.
A1	216G6-82501		SEAT-ASSY	ｼｰﾄｱｯｾﾝ	1	INC.1-31
1	234A6-82001		FRAME,BACK	ﾌﾚｰﾑ	1	
2	234A6-82031		PAD,BACK	ﾊﾟｯﾄﾞ	1	
3	234A6-82041		COVER	ｶﾊﾞｰ	1	
4	01184-10020		BOLT	ﾎﾞﾙﾄ	2	
5	234A6-82191		BOLT	ﾎﾞﾙﾄ	1	
6	234A6-82201		SCREW	ｽｸﾘｭ	4	
7	234A6-82221		SEAL,A	ｼｰﾙ	1	
8	234A6-82231		SEAL,B	ｼｰﾙ	2	
9	234A6-82241		MOLE	ﾓｰﾙ	1	
10	216G6-82611		FRAME,UPPER	ﾌﾚｰﾑ	1	
11	234A6-82051		LID	ﾘｯﾄﾞ	1	
12	234A6-82061		RACK	ﾗｯｸ	1	
13	234A6-82211		SCREW	ｽｸﾘｭ	2	
14	216G6-82601		PLATE,BOTTOM	ﾌﾟﾚｰﾄ	1	
15	234A6-82021		PAD,CUSHION	ﾊﾟｯﾄﾞ	1	
16	234A6-82091		GRIP,RH	ｸﾞﾘｯﾌﾟ	1	
17	234A6-82101		GRIP,LH	ｸﾞﾘｯﾌﾟ	1	
18	234A6-82071		COVER,RH	ｶﾊﾞｰ	1	
19	234A6-82081		COVER,LH	ｶﾊﾞｰ	1	
20	234A6-82131		BELT	ﾍﾞﾙﾄ	1	
21	234A6-82141		BACKLE	ﾊﾞｯｸﾙ	1	
22	234A6-82181		BOLT	ﾎﾞﾙﾄ	2	
23	234A6-82151		COVER,BELT	ｶﾊﾞｰ	1	
24	234A6-82271		RAIL,SLIDE C	ﾚｰﾙ	1	
25	216G6-82621		RAIL,SLIDE A	ﾚｰﾙ	1	
26	234A6-82281		CABLE	ｹｰﾌﾞﾙ	1	
27	234A6-82291		WASHER	ﾜｯｼｬ	2	
28	01184-10020		BOLT	ﾎﾞﾙﾄ	4	
29	234A6-82201		SCREW	ｽｸﾘｭ	6	
30	234A6-82211		SCREW	ｽｸﾘｭ	3	
31	234A6-82301		BOLT	ﾎﾞﾙﾄ	4	
32	01400-00008		NUT	ﾅｯﾄ	4	
33	02010-00008		WASHER	ﾜｯｼｬ	4	

FIG.183A SEAT

(F5026821) シート

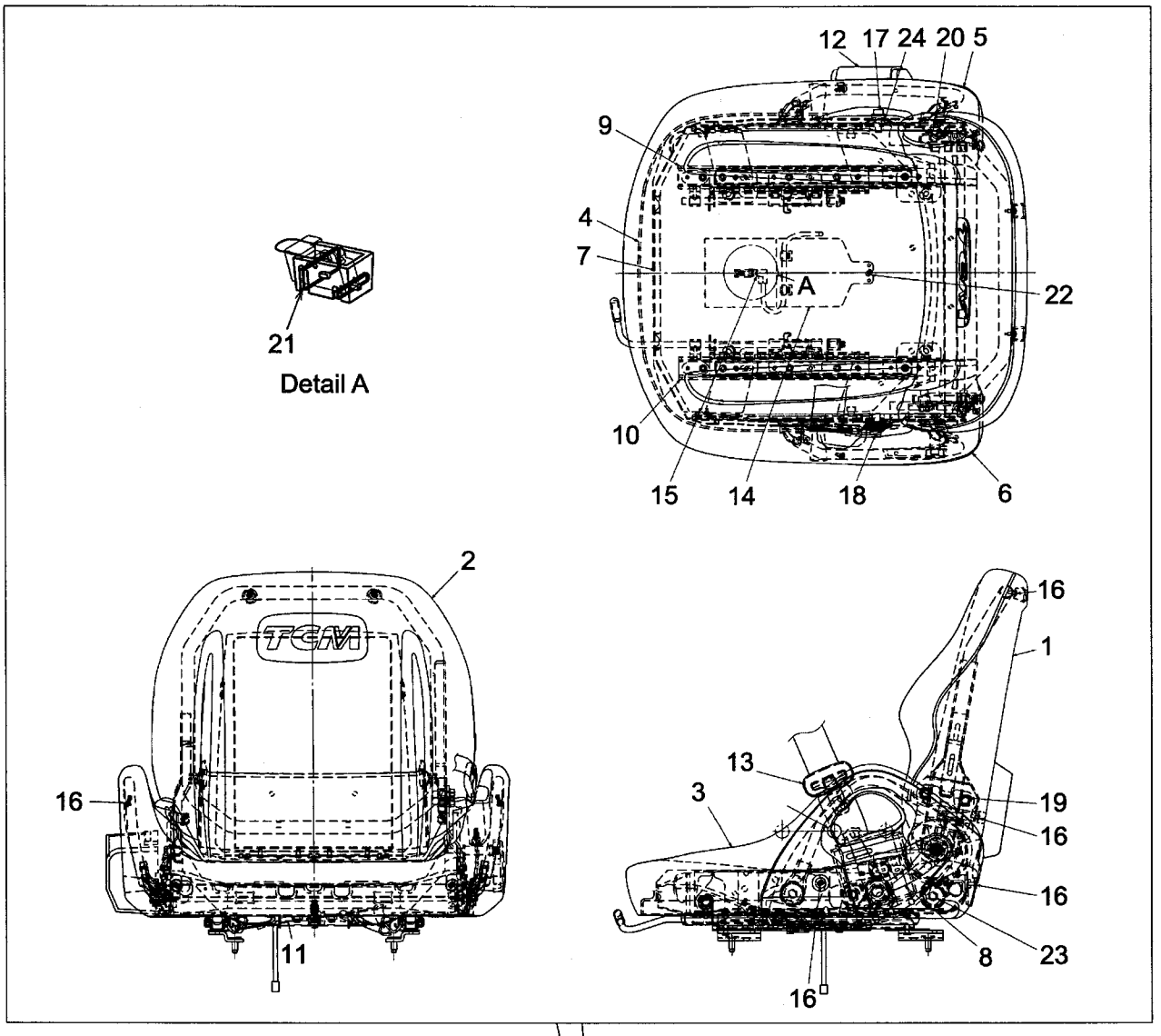

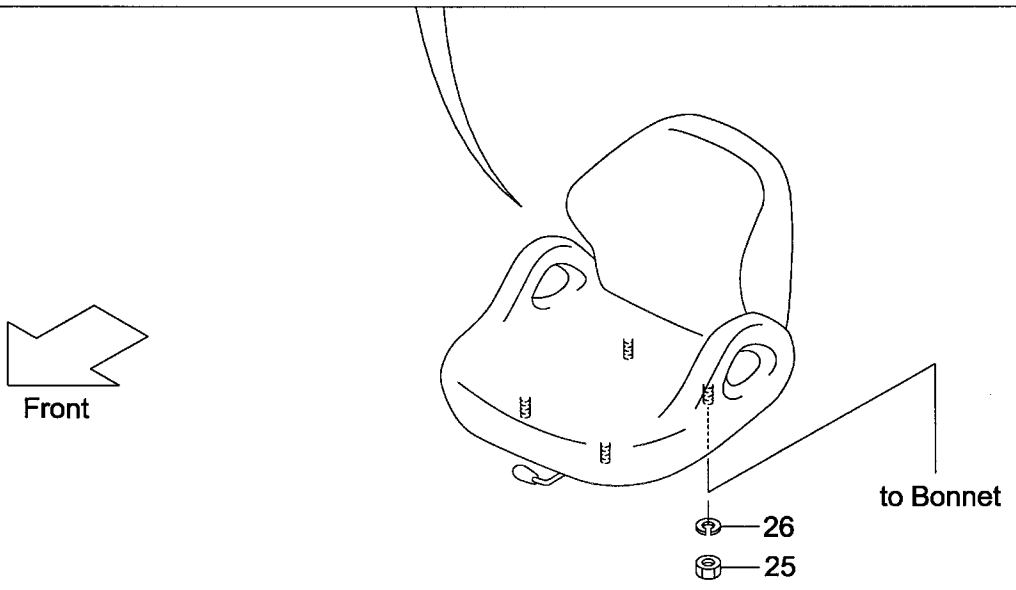

FIG.183A

(F5026821)

A:FG20C17 FG20T17 FG25C17 FG25T17:11062-
B:FD20C17 FD20T17 FD25C17 FD25T17:11031-

Item No	Part No.	Mark	Description		Req'd	Remarks : Serial No.
A1	242F6-80201		SEAT-ASSY	ｼｰﾄｱｯｾﾝ	1	INC.1-13,16-20,23,24
-	542F3-80201		SEAT-ASSY	ｼｰﾄｱｯｾﾝ	1	(SEAT SW) INC.1-24
1	242F6-82001		BOARD,SEAT-BACK	ﾎﾞｰﾄﾞ	1	
2	242F6-82011		PAD,SEAT-BACK	ﾊﾟｯﾄﾞ	1	
3	242F6-82341		PAD,SEAT-CUSHION	ﾊﾟｯﾄﾞ	1	
4	242F6-82031		PANEL,SEAT-CUSHION	ﾊﾟﾈﾙ	1	
5	242F6-82041		SHIELD,RH	ｼｰﾙﾄﾞ	1	
6	242F6-82051		SHIELD,LH	ｼｰﾙﾄﾞ	1	
7	242F6-82351		FRAME	ﾌﾚｰﾑ	1	
8	242F6-82071		LEVER	ﾚﾊﾞｰ	1	
9	242F6-82361		TRACK,RH	ﾄﾗｯｸ	1	
10	242F6-82371		TRACK,LH	ﾄﾗｯｸ	1	
11	242F6-82101		WIRE	ﾜｲﾔ	1	
12	242F6-82111		BELT,SEAT,OUTER	ﾍﾞﾙﾄ	1	
13	242F6-82121		BELT,SEAT,INNER	ﾍﾞﾙﾄ	1	
14	542F3-82001		PLATE,SEAT-CUSHION	ﾌﾟﾚｰﾄ	1	(SEAT SW)
15	542F3-82011		SWITCH,SEAT	ｽｲｯﾁ	1	(SEAT SW)
16	242F6-82151		SCREW	ｽｸﾘｭ	10	
17	242F6-82161		BOLT	ﾎﾞﾙﾄ	1	
18	242F6-82171		BOLT	ﾎﾞﾙﾄ	1	
19	242F6-82181		BOLT	ﾎﾞﾙﾄ	2	
20	242F6-82191		BOLT	ﾎﾞﾙﾄ	1	
21	542F3-82021		CLAMP	ｸﾗﾝﾌﾟ	2	(SEAT SW)
22	242F6-82241		SCREW	ｽｸﾘｭ	1	(SEAT SW)
23	242F6-82261		BOLT	ﾎﾞﾙﾄ	4	
24	242F6-82291		SHAFT,SUS-CONTROL	ｼｬﾌﾄ	1	
25	01400-00008		NUT	ﾅｯﾄ	4	
26	02010-00008		WASHER	ﾜｯｼｬ	4	

FIG.184 SEAT [HGL]

(F5026830) シート

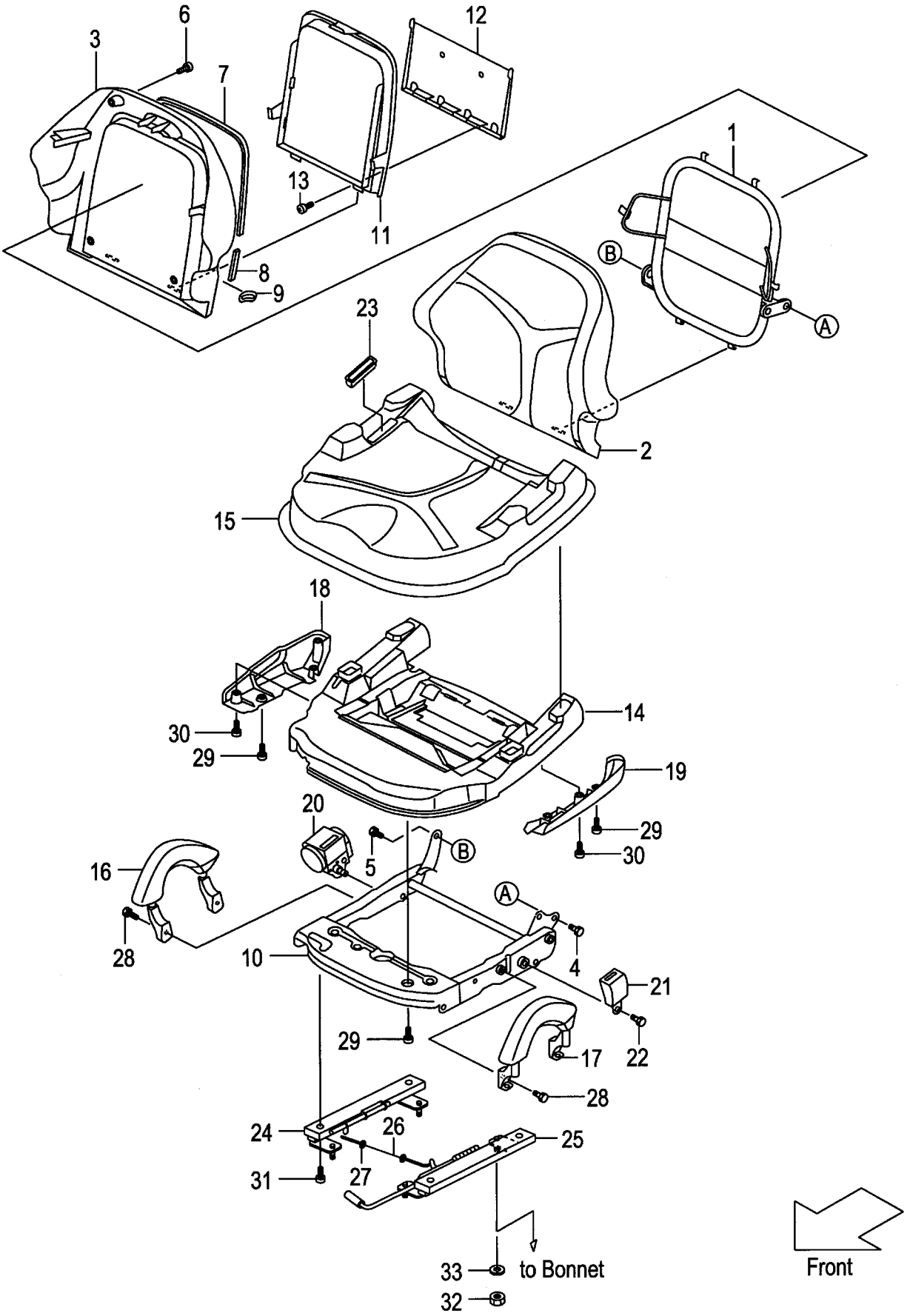

A:FG20C6 FG20T6 FG25C6 FG25T6 FG20W6 FG25W6:1-66921
B:FD20C6 FD20T6 FD25C6 FD25T6 FD20W6 FD25W6:1-87016

Item No	Part No.	Mark	Description		Req'd	Remarks : Serial No.
A1	216G6-82501		SEAT-ASSY	ｼｰﾄｱｯｾﾝ	1	[HGL] INC.1-31
1	234A6-82001		FRAME,BACK	ﾌﾚｰﾑ	1	[HGL]
2	234A6-82031		PAD,BACK	ﾊﾟｯﾄﾞ	1	[HGL]
3	234A6-82041		COVER	ｶﾊﾞｰ	1	[HGL]
4	01184-10020		BOLT	ﾎﾞﾙﾄ	2	[HGL]
5	234A6-82191		BOLT	ﾎﾞﾙﾄ	1	[HGL]
6	234A6-82201		SCREW	ｽｸﾘｭ	4	[HGL]
7	234A6-82221		SEAL,A	ｼｰﾙ	1	[HGL]
8	234A6-82231		SEAL,B	ｼｰﾙ	2	[HGL]
9	234A6-82241		MOLE	ﾓｰﾙ	1	[HGL]
10	216G6-82611		FRAME,UPPER	ﾌﾚｰﾑ	1	[HGL]
11	234A6-82051		LID	ﾘｯﾄﾞ	1	[HGL]
12	234A6-82061		RACK	ﾗｯｸ	1	[HGL]
13	234A6-82211		SCREW	ｽｸﾘｭ	2	[HGL]
14	216G6-82601		PLATE,BOTTOM	ﾌﾟﾚｰﾄ	1	[HGL]
15	234A6-82021		PAD,CUSHION	ﾊﾟｯﾄﾞ	1	[HGL]
16	234A6-82091		GRIP,RH	ｸﾞﾘｯﾌﾟ	1	[HGL]
17	234A6-82101		GRIP,LH	ｸﾞﾘｯﾌﾟ	1	[HGL]
18	234A6-82071		COVER,RH	ｶﾊﾞｰ	1	[HGL]
19	234A6-82081		COVER,LH	ｶﾊﾞｰ	1	[HGL]
20	234A6-82131		BELT	ﾍﾞﾙﾄ	1	[HGL]
21	234A6-82141		BACKLE	ﾊﾞｯｸﾙ	1	[HGL]
22	234A6-82181		BOLT	ﾎﾞﾙﾄ	2	[HGL]
23	234A6-82151		COVER,BELT	ｶﾊﾞｰ	1	[HGL]
24	234A6-82271		RAIL,SLIDE C	ﾚｰﾙ	1	[HGL]
25	216G6-82621		RAIL,SLIDE A	ﾚｰﾙ	1	[HGL]
26	234A6-82281		CABLE	ｹｰﾌﾞﾙ	1	[HGL]
27	234A6-82291		WASHER	ﾜｯｼｬ	2	[HGL]
28	01184-10020		BOLT	ﾎﾞﾙﾄ	4	[HGL]
29	234A6-82201		SCREW	ｽｸﾘｭ	6	[HGL]
30	234A6-82211		SCREW	ｽｸﾘｭ	3	[HGL]
31	234A6-82301		BOLT	ﾎﾞﾙﾄ	4	[HGL]
32	01400-00008		NUT	ﾅｯﾄ	4	[HGL]
33	02010-00008		WASHER	ﾜｯｼｬ	4	[HGL]

FIG.184A SEAT [HGL]

(F5026831) シート

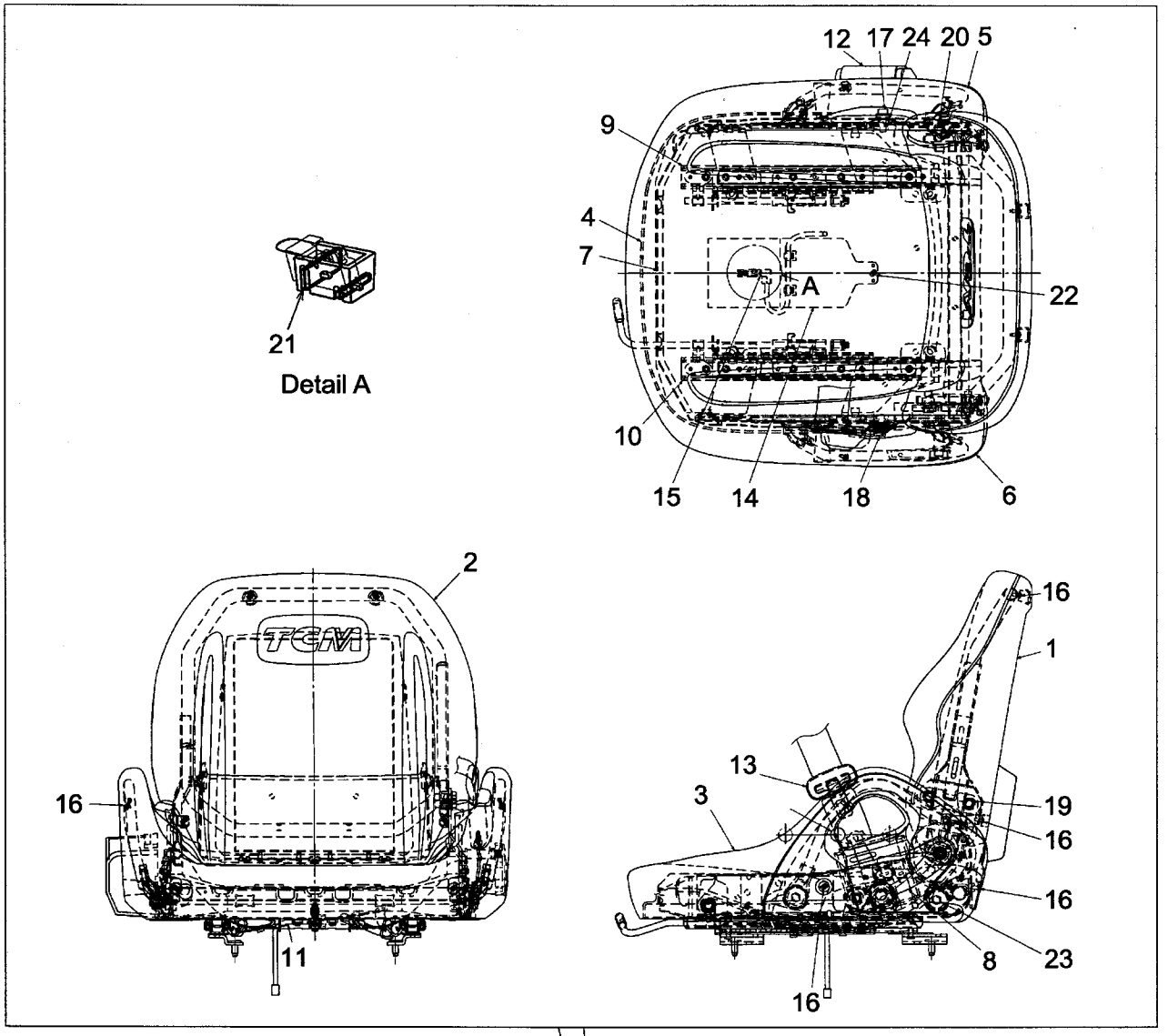

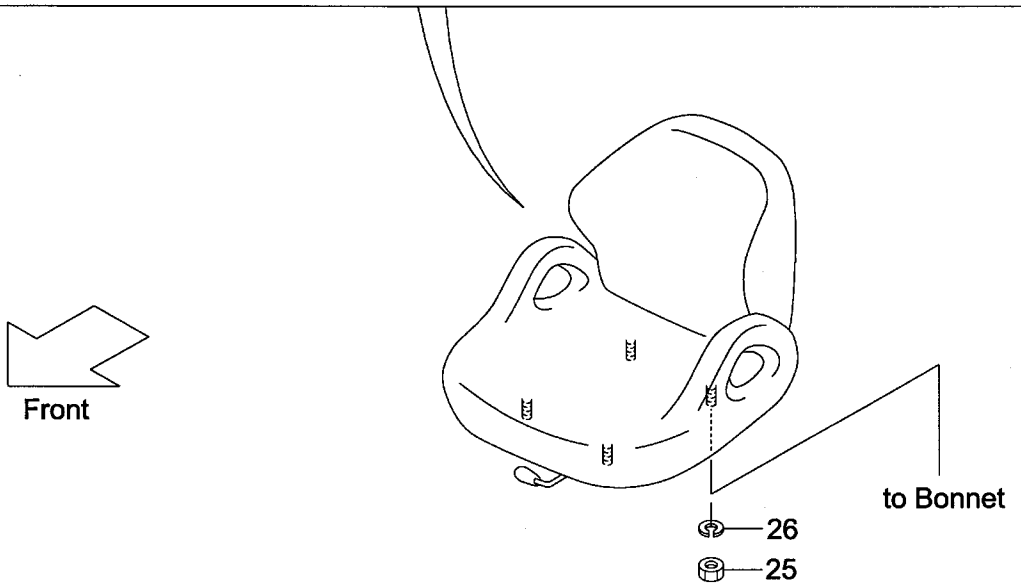

A:FG20C6 FG20T6 FG25C6 FG25T6 FG20W6 FG25W6:66922-
B:FD20C6 FD20T6 FD25C6 FD25T6 FD20W6 FD25W6:87017-

Item No	Part No.	Mark	Description		Req'd	Remarks : Serial No.
A1	242F6-80201		SEAT-ASSY	ｼｰﾄｱｯｾﾝ	1	[HGL] INC.1-13,16-20,23,24
-	542F3-80201		SEAT-ASSY	ｼｰﾄｱｯｾﾝ	1	[HGL](SEAT SW) INC.1-24
1	242F6-82001		BOARD,SEAT-BACK	ﾎﾞｰﾄﾞ	1	[HGL]
2	242F6-82011		PAD,SEAT-BACK	ﾊﾟｯﾄﾞ	1	[HGL]
3	242F6-82341		PAD,SEAT-CUSHION	ﾊﾟｯﾄﾞ	1	[HGL]
4	242F6-82031		PANEL,SEAT-CUSHION	ﾊﾟﾈﾙ	1	[HGL]
5	242F6-82041		SHIELD,RH	ｼｰﾙﾄﾞ	1	[HGL]
6	242F6-82051		SHIELD,LH	ｼｰﾙﾄﾞ	1	[HGL]
7	242F6-82351		FRAME	ﾌﾚｰﾑ	1	[HGL]
8	242F6-82071		LEVER	ﾚﾊﾞｰ	1	[HGL]
9	242F6-82361		TRACK,RH	ﾄﾗｯｸ	1	[HGL]
10	242F6-82371		TRACK,LH	ﾄﾗｯｸ	1	[HGL]
11	242F6-82101		WIRE	ﾜｲﾔ	1	[HGL]
12	242F6-82111		BELT,SEAT,OUTER	ﾍﾞﾙﾄ	1	[HGL]
13	242F6-82121		BELT,SEAT,INNER	ﾍﾞﾙﾄ	1	[HGL]
14	542F3-82001		PLATE,SEAT-CUSHION	ﾌﾟﾚｰﾄ	1	[HGL](SEAT SW)
15	542F3-82011		SWITCH,SEAT	ｽｲｯﾁ	1	[HGL](SEAT SW)
16	242F6-82151		SCREW	ｽｸﾘｭ	10	[HGL]
17	242F6-82161		BOLT	ﾎﾞﾙﾄ	1	[HGL]
18	242F6-82171		BOLT	ﾎﾞﾙﾄ	1	[HGL]
19	242F6-82181		BOLT	ﾎﾞﾙﾄ	2	[HGL]
20	242F6-82191		BOLT	ﾎﾞﾙﾄ	1	[HGL]
21	542F3-82021		CLAMP	ｸﾗﾝﾌﾟ	2	[HGL](SEAT SW)
22	242F6-82241		SCREW	ｽｸﾘｭ	1	[HGL](SEAT SW)
23	242F6-82261		BOLT	ﾎﾞﾙﾄ	4	[HGL]
24	242F6-82291		SHAFT,SUS-CONTROL	ｼｬﾌﾄ	1	[HGL]
25	01400-00008		NUT	ﾅｯﾄ	4	[HGL]
26	02010-00008		WASHER	ﾜｯｼｬ	4	[HGL]

FIG.185 SEAT [RW][CNG]

(F5026840) シート

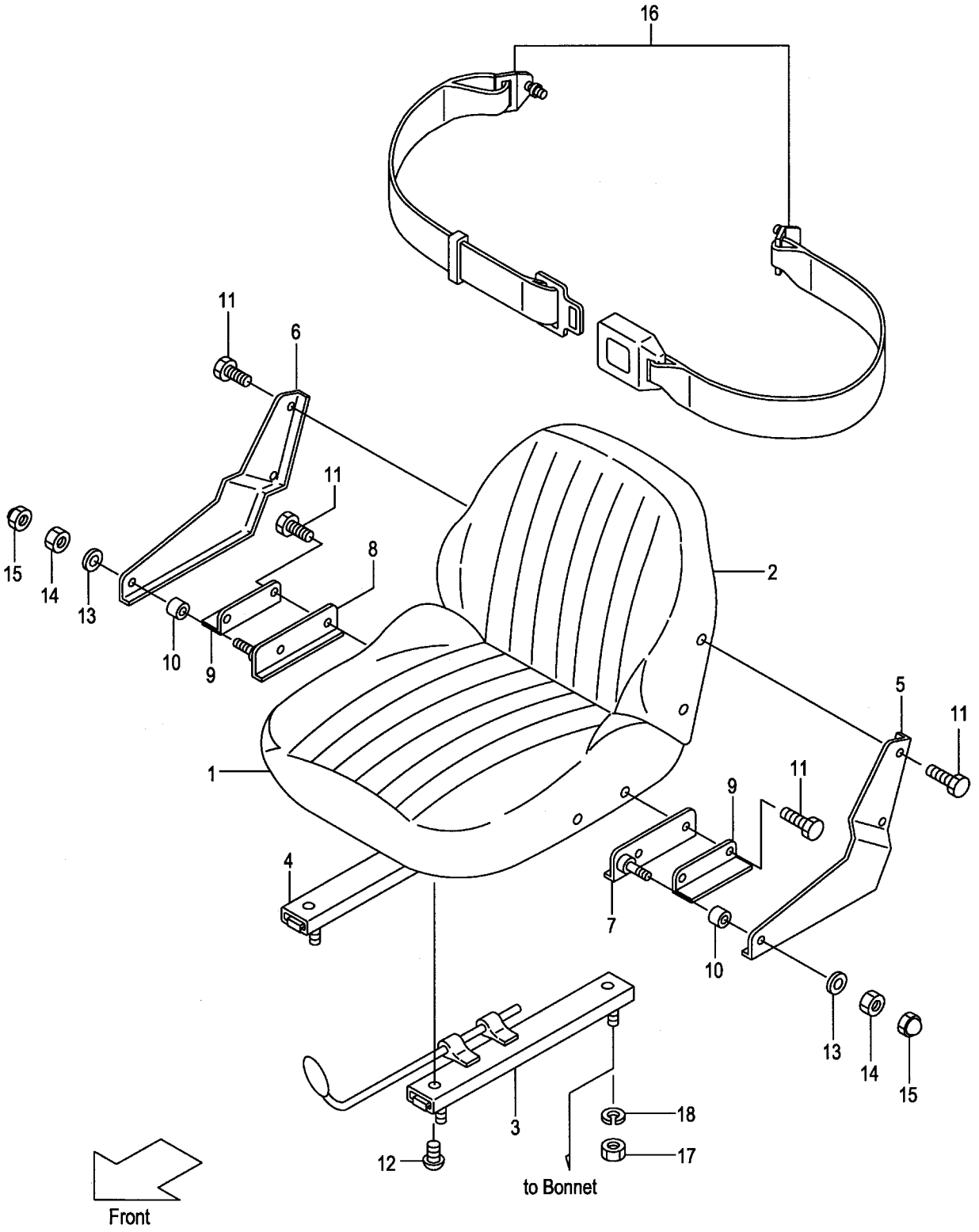

A:FG25C6 FG25T6 FG25W6
B:FD25C6 FD25T6 FD25W6

Item No	Part No.	Mark	Description		Req'd	Remarks : Serial No.
A1	24846-80302		SEAT-ASSY	ｼｰﾄｱｯｾﾝ	1	[RW] INC.1-15
-	24846-80302		SEAT-ASSY	ｼｰﾄｱｯｾﾝ	1	A
						[CNG] INC.1-15
1	23656-83001		CUSHION,SEAT	ｸｯｼｮﾝ	1	[RW]
-	23656-83001		CUSHION,SEAT	ｸｯｼｮﾝ	1	A
						[CNG]
2	23656-83011		BACK,SEAT	ﾊﾞｯｸ	1	[RW]
-	23656-83011		BACK,SEAT	ﾊﾞｯｸ	1	A
						[CNG]
3	NO PART NO.	#	ADJUSTER,SEAT	ｱｼﾞｬｽﾀ	1	[RW]
-	NO PART NO.	#	ADJUSTER,SEAT	ｱｼﾞｬｽﾀ	1	A
						[CNG]
4	NO PART NO.	#	ADJUSTER,SEAT	ｱｼﾞｬｽﾀ	1	[RW]
-	NO PART NO.	#	ADJUSTER,SEAT	ｱｼﾞｬｽﾀ	1	A
						[CNG]
5	24846-82001		PLATE,SIDE,LH	ﾌﾟﾚｰﾄ	1	[RW]
-	24846-82001		PLATE,SIDE,LH	ﾌﾟﾚｰﾄ	1	A
						[CNG]
6	24846-82011		PLATE,SIDE,RH	ﾌﾟﾚｰﾄ	1	[RW]
-	24846-82011		PLATE,SIDE,RH	ﾌﾟﾚｰﾄ	1	A
						[CNG]
7	24846-82021		BRACKET,HINGE,LH	ﾌﾞﾗｹｯﾄ	1	[RW]
-	24846-82021		BRACKET,HINGE,LH	ﾌﾞﾗｹｯﾄ	1	A
						[CNG]
8	24846-82031		BRACKET,HINGE,RH	ﾌﾞﾗｹｯﾄ	1	[RW]
-	24846-82031		BRACKET,HINGE,RH	ﾌﾞﾗｹｯﾄ	1	A
						[CNG]
9	24846-82041		BRACKET	ﾌﾞﾗｹｯﾄ	2	[RW]
-	24846-82041		BRACKET	ﾌﾞﾗｹｯﾄ	2	A
						[CNG]
10	23655-22101		BUSHING	ﾌﾞｯｼﾝｸﾞ	2	[RW]
-	23655-22101		BUSHING	ﾌﾞｯｼﾝｸﾞ	2	A
						[CNG]
11	23656-83051		BOLT	ﾎﾞﾙﾄ	8	[RW]
-	23656-83051		BOLT	ﾎﾞﾙﾄ	8	A
						[CNG]
12	23656-83061		SCREW	ｽｸﾘｭ	4	[RW]
-	23656-83061		SCREW	ｽｸﾘｭ	4	A
						[CNG]
13	02000-00010		WASHER	ﾜｯｼｬ	2	[RW]
-	02000-00010		WASHER	ﾜｯｼｬ	2	A
						[CNG]
14	01402-00010		NUT	ﾅｯﾄ	2	[RW]
-	01402-00010		NUT	ﾅｯﾄ	2	A
						[CNG]
15	24846-82051		NUT,CAP	ﾅｯﾄ	2	[RW]
-	24846-82051		NUT,CAP	ﾅｯﾄ	2	A
						[CNG]
16	514T6-42001		BELT,SEAT	ﾍﾞﾙﾄ	1	[RW]

FIG.185 SEAT [RW][CNG]

(F5026840) シート

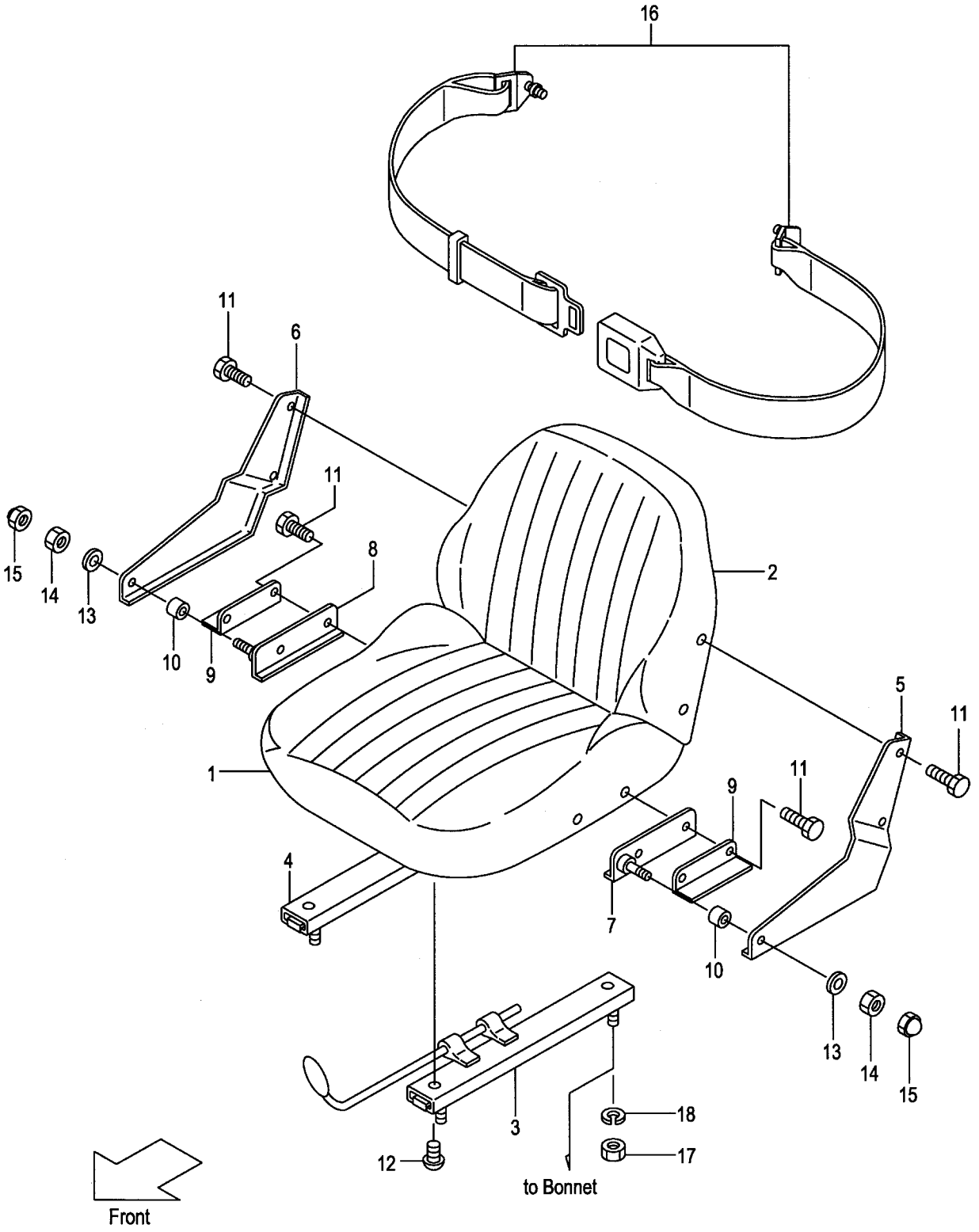

A:FG25C6 FG25T6 FG25W6
B:FD25C6 FD25T6 FD25W6

Item No	Part No.	Mark	Description	Req'd	Remarks : Serial No.
-	514T6-42001		BELT,SEAT ﾍﾞﾙﾄ	1	A [CNG]
17	01400-00008		NUT ﾅｯﾄ	4	[RW]
-	01400-00008		NUT ﾅｯﾄ	4	A [CNG]
18	02010-00008		WASHER ﾜｯｼｬ	4	[RW]
-	02010-00008		WASHER ﾜｯｼｬ	4	A [CNG]

FIG.186 PUMP UNIT (GASOLINE:CLUTCH & TOR-CON)

(F5027110) ﾎﾟﾝﾌﾟﾕﾆｯﾄ

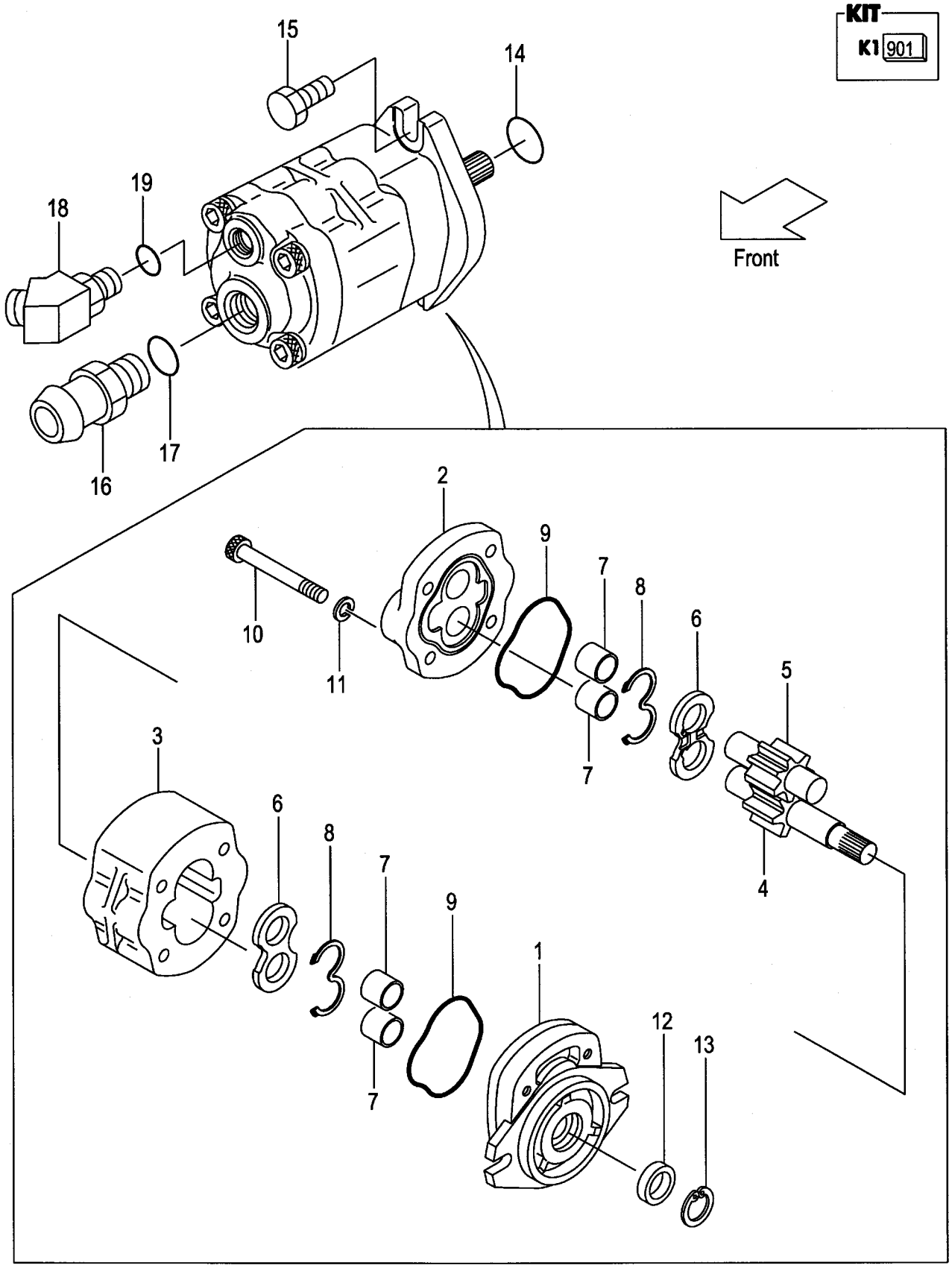

A:FG20C17 FG20T17 FG25C17 FG25T17
B:FG20C6 FG20T6 FG25C6 FG25T6

Item No	Part No.	Mark	Description		Req'd	Remarks : Serial No.
A1	110F7-10232		PUMP-ASSY,GEAR	ｷﾞﾔｰﾎﾟﾝﾌﾟｱｯｾﾝ	1	A
						INC.1-13
-	110F7-10271		PUMP-ASSY,GEAR	ｷﾞﾔｰﾎﾟﾝﾌﾟｱｯｾﾝ	1	B
						INC.1-13
901	110F7-12001	K1	KIT,REPAIR	ﾘﾍﾟｱｷｯﾄ	1	INC.8,9,12,13
1	NO PART NO.	#	COVER,FRONT	ｶﾊﾞｰ	1	
2	NO PART NO.	#	COVER,REAR	ｶﾊﾞｰ	1	
3	NO PART NO.	#	BODY	ﾎﾞﾃﾞｨ	1	A
-	NO PART NO.	#	BODY	ﾎﾞﾃﾞｨ	1	B
4	NO PART NO.	#	GEAR,DRIVE	ｷﾞﾔｰ	1	A
-	NO PART NO.	#	GEAR,DRIVE	ｷﾞﾔｰ	1	B
5	NO PART NO.	#	GEAR,DRIVEN	ｷﾞﾔｰ	1	A
-	NO PART NO.	#	GEAR,DRIVEN	ｷﾞﾔｰ	1	B
6	NO PART NO.	#	PLATE,SIDE	ﾌﾟﾚｰﾄ	2	
7	NO PART NO.	#	BUSHING	ﾌﾞｯｼﾝｸﾞ	4	
8	NO PART NO.	#*	GASKET	ｶﾞｽｹｯﾄ	2	
9	NO PART NO.	#*	GASKET	ｶﾞｽｹｯﾄ	2	
10	R-022-24238-00		BOLT	ﾎﾞﾙﾄ	4	A
-	R-400-50647-03		BOLT	ﾎﾞﾙﾄ	4	B
11	R-402-00012-12		WASHER	ﾜｯｼｬ	4	
12	NO PART NO.	#*	SEAL,OIL	ｼｰﾙ	1	
13	NO PART NO.	#*	RING,SNAP	ｽﾅｯﾌﾟﾘﾝｸﾞ	1	
14	03340-00140		O-RING	Oﾘﾝｸﾞ	1	
15	01185-10030		BOLT	ﾎﾞﾙﾄ	2	
A2	225A7-62021		NIPPLE-ASSY	ﾆｯﾌﾟﾙｱｯｾﾝ	1	INC.16,17
16	NO PART NO.	#	NIPPLE	ﾆｯﾌﾟﾙ	1	
17	03320-00290		O-RING	Oﾘﾝｸﾞ	1	
A3	216M7-62101		ADAPTER-ASSY	ｱﾀﾞﾌﾟﾀｱｯｾﾝ	1	INC.18,19
18	NO PART NO.	#	ADAPTER	ｱﾀﾞﾌﾟﾀ	1	
19	03320-00180		O-RING	Oﾘﾝｸﾞ	1	

FIG.187 PUMP UNIT (DIESEL:CLUTCH & TOR-CON)

(F5027120) ﾎﾟﾝﾌﾟﾕﾆｯﾄ

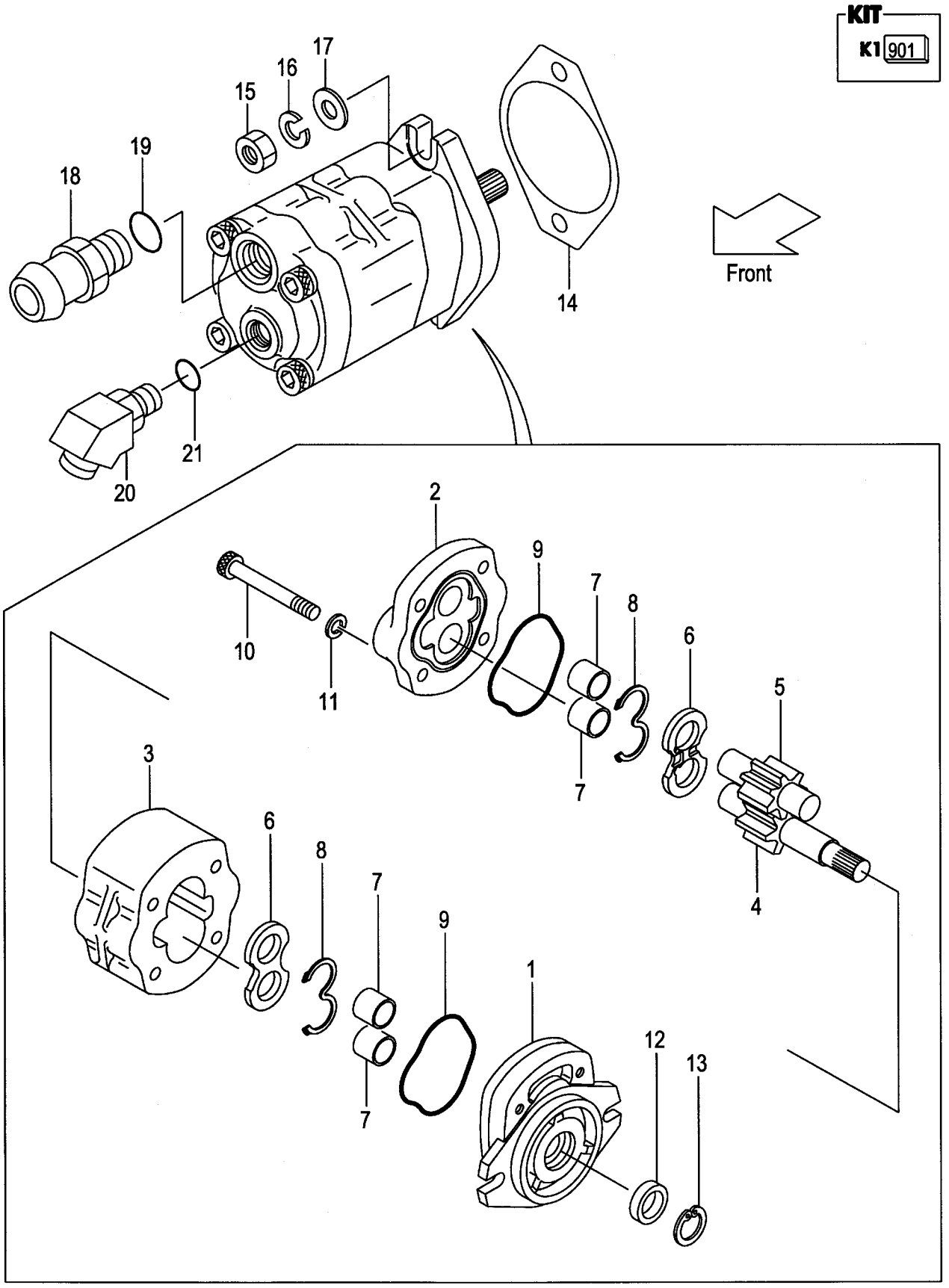

A:FD20C6 FD20T6 FD25C6 FD25T6

Item No	Part No.	Mark	Description		Req'd	Remarks : Serial No.
A1	117M7-10401		PUMP-ASSY,GEAR	ｷﾞﾔｰﾎﾟﾝﾌﾟｱｯｾﾝ	1	INC.1-13
901	R-403-21988	K1	KIT,REPAIR	ﾘﾍﾟｱｷｯﾄ	1	INC.8,9,12
1	NO PART NO.	#	COVER,FRONT	ｶﾊﾞｰ	1	
2	NO PART NO.	#	COVER,REAR	ｶﾊﾞｰ	1	
3	NO PART NO.	#	BODY	ﾎﾞﾃﾞｨ	1	
4	NO PART NO.	#	GEAR,DRIVE	ｷﾞﾔｰ	1	
5	NO PART NO.	#	GEAR,DRIVEN	ｷﾞﾔｰ	1	
6	NO PART NO.	#	PLATE,SIDE	ﾌﾟﾚｰﾄ	2	
7	NO PART NO.	#	BUSHING	ﾌﾞｯｼﾝｸﾞ	4	
8	NO PART NO.	#*	GASKET	ｶﾞｽｹｯﾄ	2	
9	NO PART NO.	#*	GASKET	ｶﾞｽｹｯﾄ	2	
10	R-402-65004-41		BOLT	ﾎﾞﾙﾄ	4	
11	R-402-00710-12		WASHER	ﾜｯｼｬ	4	
12	NO PART NO.	#*	SEAL,OIL	ｼｰﾙ	1	
13	NO PART NO.	#	RING,SNAP	ｽﾅｯﾌﾟﾘﾝｸﾞ	1	
14	23657-12002		PACKING	ﾊﾟｯｷﾝｸﾞ	1	
15	01402-00010		NUT	ﾅｯﾄ	2	
16	02010-00010		WASHER	ﾜｯｼｬ	2	
17	02000-00010		WASHER	ﾜｯｼｬ	2	
A2	225A7-62021		NIPPLE-ASSY	ﾆｯﾌﾟﾙｱｯｾﾝ	1	INC.18,19
18	NO PART NO.	#	NIPPLE	ﾆｯﾌﾟﾙ	1	
19	03320-00290		O-RING	Oﾘﾝｸﾞ	1	
A3	271A7-60351		ADAPTER-ASSY	ｱﾀﾞﾌﾟﾀｱｯｾﾝ	1	INC.20,21
20	NO PART NO.	#	ADAPTER	ｱﾀﾞﾌﾟﾀ	1	
21	03320-00180		O-RING	Oﾘﾝｸﾞ	1	

FIG.188 PUMP UNIT (DIESEL)

(F5027130) ﾎﾟﾝﾌﾟﾕﾆｯﾄ

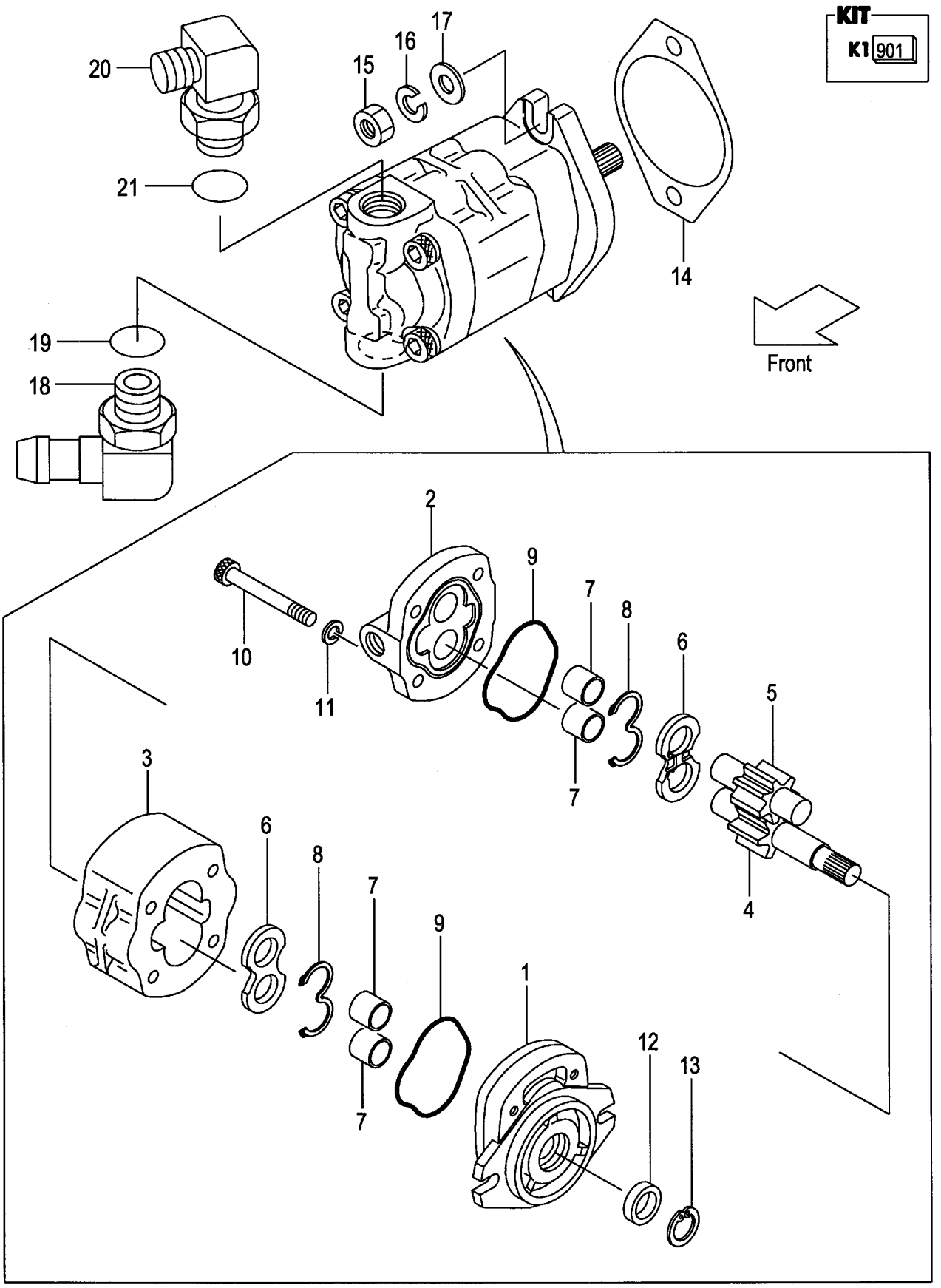

A:FD20C17 FD20T17 FD25C17 FD25T17

Item No	Part No.	Mark	Description		Req'd	Remarks : Serial No.
A1	110G7-10231		PUMP-ASSY,GEAR	ｷﾞﾔｰﾎﾟﾝﾌﾟｱｯｾﾝ	1	INC.1-13
901	110F7-12001	K1	KIT,REPAIR	ﾘﾍﾟｱｷｯﾄ	1	INC.8,9,12,13
1	NO PART NO.	#	COVER,FRONT	ｶﾊﾞｰ	1	
2	NO PART NO.	#	COVER,REAR	ｶﾊﾞｰ	1	
3	NO PART NO.	#	BODY	ﾎﾞﾃﾞｨ	1	
4	NO PART NO.	#	GEAR,DRIVE	ｷﾞﾔｰ	1	
5	NO PART NO.	#	GEAR,DRIVEN	ｷﾞﾔｰ	1	
6	NO PART NO.	#	PLATE,SIDE	ﾌﾟﾚｰﾄ	2	
7	NO PART NO.	#	BUSHING	ﾌﾞｯｼﾝｸﾞ	4	
8	NO PART NO.	#*	GASKET	ｶﾞｽｹｯﾄ	2	
9	NO PART NO.	#*	GASKET	ｶﾞｽｹｯﾄ	2	
10	R-022-24238-00		BOLT	ﾎﾞﾙﾄ	4	
11	R-402-00012-12		WASHER	ﾜｯｼｬ	4	
12	NO PART NO.	#*	SEAL,OIL	ｼｰﾙ	1	
13	NO PART NO.	#*	RING,SNAP	ｽﾅｯﾌﾟﾘﾝｸﾞ	1	
14	23657-12002		PACKING	ﾊﾟｯｷﾝｸﾞ	1	
15	01402-00010		NUT	ﾅｯﾄ	2	
16	02010-00010		WASHER	ﾜｯｼｬ	2	
17	02000-00010		WASHER	ﾜｯｼｬ	2	
A2	214L7-62261		ELBOW-ASSY	ｴﾙﾎﾞｱｯｾﾝ	1	INC.18,19
18	NO PART NO.	#	ELBOW	ｴﾙﾎﾞ	1	
19	03320-00290		O-RING	Oﾘﾝｸﾞ	1	
A3	04150-20404		ELBOW-ASSY	ｴﾙﾎﾞｱｯｾﾝ	1	INC.20,21
20	NO PART NO.	#	ELBOW	ｴﾙﾎﾞ	1	
21	03320-00180		O-RING	Oﾘﾝｸﾞ	1	

FIG.189 PUMP UNIT (GASOLINE:OIL CLUTCH)

(F5027140) ﾎﾟﾝﾌﾟﾕﾆｯﾄ

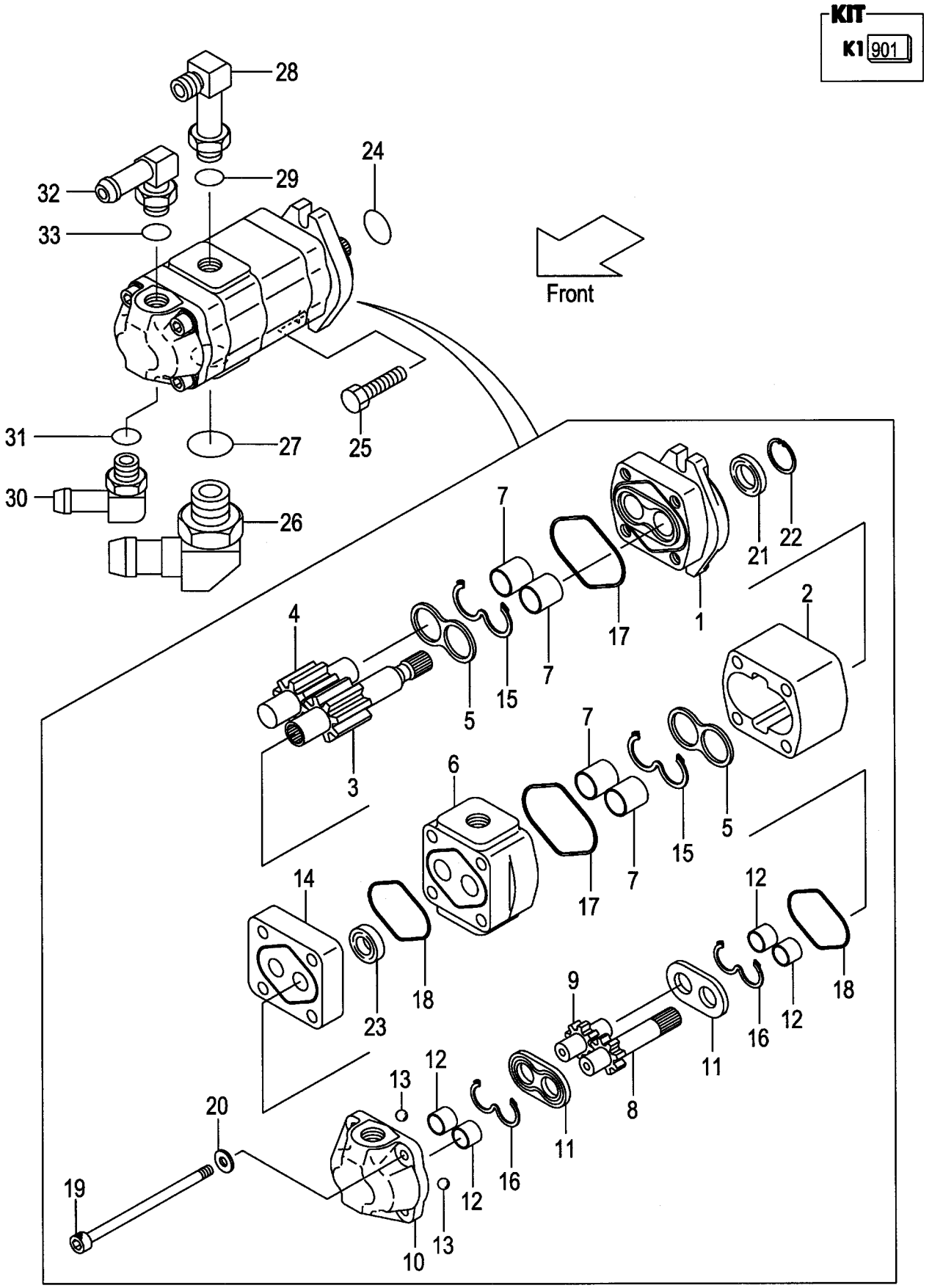

A:FG20W6 FG25W6

Item No	Part No.	Mark	Description		Req'd	Remarks : Serial No.
A1	116W7-10301		PUMP-ASSY,GEAR	ｷﾞｱｰﾎﾟﾝﾌﾟｱｯｾﾝ	1	INC.1-23
901	R-403-24323	K1	KIT,SEAL	ｼｰﾙｷｯﾄ	1	INC.15-18,21,23
1	NO PART NO.	#	COVER,FRONT	ｶﾊﾞｰ	1	
2	NO PART NO.	#	BODY,1	ﾎﾞﾃﾞｨ	1	
3	NO PART NO.	#	GEAR,DRIVE,1	ｷﾞｱｰ	1	
4	NO PART NO.	#	GEAR,DRIVEN,1	ｷﾞｱｰ	1	
5	NO PART NO.	#	PLATE,SIDE,1	ﾌﾟﾚｰﾄ	2	
6	NO PART NO.	#	PLATE,ADAPTER	ﾌﾟﾚｰﾄ	1	
7	NO PART NO.	#	BUSHING,1	ﾌﾞｯｼﾝｸﾞ	4	
8	NO PART NO.	#	GEAR,DRIVE,2	ｷﾞｱｰ	1	
9	NO PART NO.	#	GEAR,DRIVEN,2	ｷﾞｱｰ	1	
10	NO PART NO.	#	BODY,2	ﾎﾞﾃﾞｨ	1	
11	NO PART NO.	#	PLATE,SIDE,2	ﾌﾟﾚｰﾄ	2	
12	NO PART NO.	#	BUSHING,2	ﾌﾞｯｼﾝｸﾞ	4	
13	NO PART NO.	#	BALL,STEEL	ﾎﾞｰﾙ	2	
14	NO PART NO.	#	SUB-PLATE,ADAPTER	ｻﾌﾞﾌﾟﾚｰﾄ	1	
15	NO PART NO.	#*	GASKET,1	ｶﾞｽｹｯﾄ	2	
16	NO PART NO.	#*	GASKET,2	ｶﾞｽｹｯﾄ	2	
17	NO PART NO.	#*	GASKET,1	ｶﾞｽｹｯﾄ	2	
18	NO PART NO.	#*	GASKET,2	ｶﾞｽｹｯﾄ	2	
19	R-402-65004-37		BOLT	ﾎﾞﾙﾄ	4	
20	R-402-00710-12		WASHER	ﾜｯｼｬ	4	
21	NO PART NO.	#*	SEAL,OIL	ｼｰﾙ	1	
22	NO PART NO.	#	RING,SNAP	ｽﾅｯﾌﾟﾘﾝｸﾞ	1	
23	NO PART NO.	#*	SEAL,OIL	ｼｰﾙ	1	
24	03340-00140		O-RING	Oﾘﾝｸﾞ	1	
25	01185-10030		BOLT	ﾎﾞﾙﾄ	2	
A2	239H7-60201		ELBOW-ASSY	ｴﾙﾎﾞｱｯｾﾝ	1	INC.26,27
26	NO PART NO.	#	ELBOW	ｴﾙﾎﾞ	1	
27	03320-00290		O-RING	Oﾘﾝｸﾞ	1	
A3	04150-20404		ELBOW-ASSY	ｴﾙﾎﾞｱｯｾﾝ	1	INC.28,29
28	NO PART NO.	#	ELBOW	ｴﾙﾎﾞ	1	
29	03320-00180		O-RING	Oﾘﾝｸﾞ	1	
A4	234H7-62351		FITTING-ASSY,HOSE	ﾎｰｽﾌｨｯﾃｨﾝｸﾞｱｯｾﾝ	1	INC.30,31
30	NO PART NO.	#	FITTING,HOSE	ﾌｨｯﾃｨﾝｸﾞ	1	
31	03320-00180		O-RING	Oﾘﾝｸﾞ	1	
A5	234H7-62301		FITTING-ASSY,HOSE	ﾎｰｽﾌｨｯﾃｨﾝｸﾞｱｯｾﾝ	1	INC.32,33
32	NO PART NO.	#	FITTING,HOSE	ﾌｨｯﾃｨﾝｸﾞ	1	
33	03320-00180		O-RING	Oﾘﾝｸﾞ	1	

FIG.190 PUMP UNIT (DIESEL:OIL CLUTCH)

(F5027150) ﾎﾟﾝﾌﾟﾕﾆｯﾄ

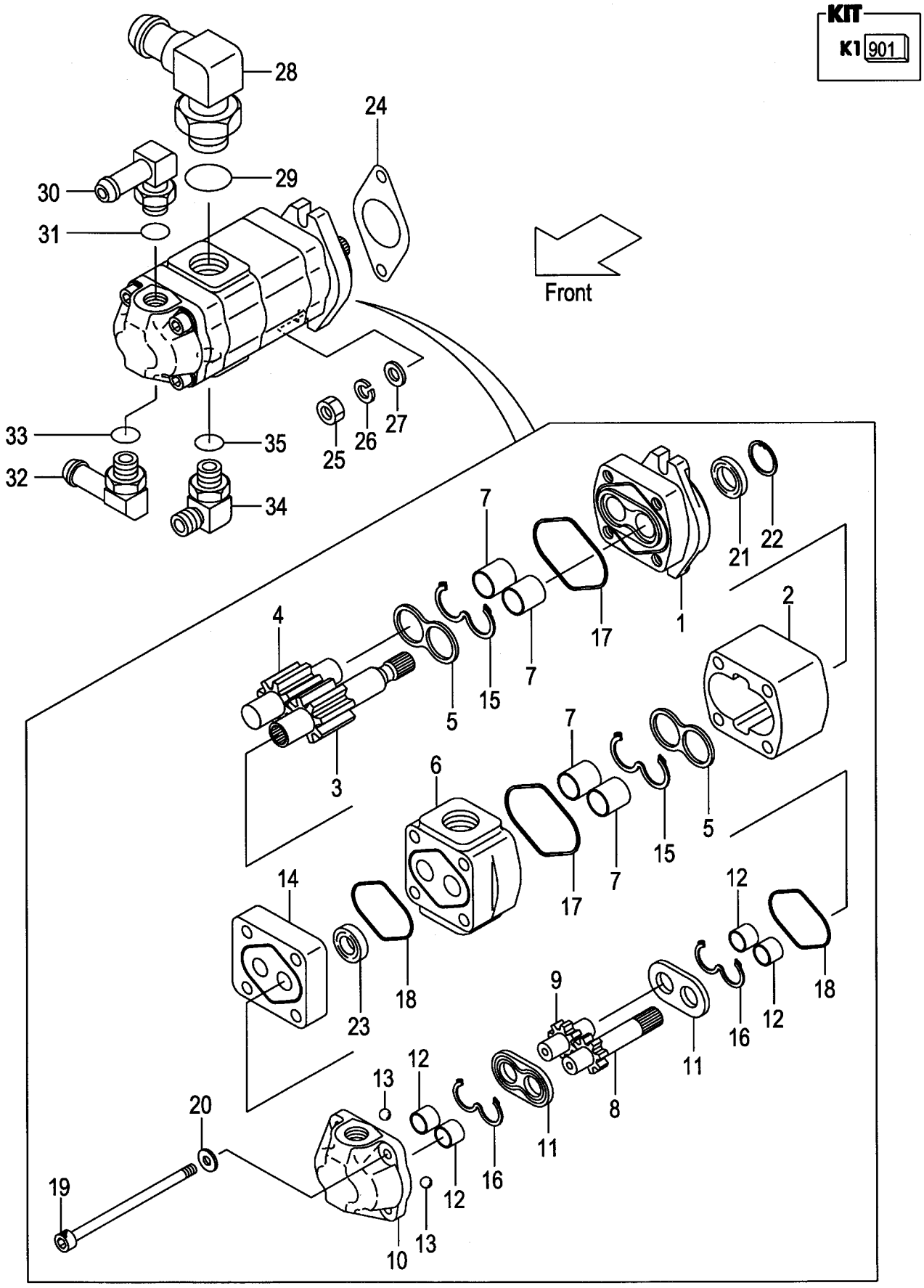

A:FD20W6 FD25W6

Item No	Part No.	Mark	Description		Req'd	Remarks : Serial No.
A1	132N7-10301		PUMP-ASSY,GEAR	ｷﾞﾔｰﾎﾟﾝﾌﾟｱｯｾﾝ	1	INC.1-23
901	R-403-24323	K1	KIT,SEAL	ｼｰﾙｷｯﾄ	1	INC.15-18,21,23
1	NO PART NO.	#	COVER,FRONT	ｶﾊﾞｰ	1	
2	NO PART NO.	#	BODY,1	ﾎﾞﾃﾞｨ	1	
3	NO PART NO.	#	GEAR,DRIVE,1	ｷﾞﾔｰ	1	
4	NO PART NO.	#	GEAR,DRIVEN,1	ｷﾞﾔｰ	1	
5	NO PART NO.	#	PLATE,SIDE,1	ﾌﾟﾚｰﾄ	2	
6	NO PART NO.	#	PLATE,ADAPTER	ﾌﾟﾚｰﾄ	1	
7	NO PART NO.	#	BUSHING,1	ﾌﾞｯｼﾝｸﾞ	4	
8	NO PART NO.	#	GEAR,DRIVE,2	ｷﾞﾔｰ	1	
9	NO PART NO.	#	GEAR,DRIVEN,2	ｷﾞﾔｰ	1	
10	NO PART NO.	#	BODY,2	ﾎﾞﾃﾞｨ	1	
11	NO PART NO.	#	PLATE,SIDE,2	ﾌﾟﾚｰﾄ	2	
12	NO PART NO.	#	BUSHING,2	ﾌﾞｯｼﾝｸﾞ	4	
13	NO PART NO.	#	BALL,STEEL	ﾎﾞｰﾙ	2	
14	NO PART NO.	#	SUB-PLATE,ADAPTER	ｻﾌﾞﾌﾟﾚｰﾄ	1	
15	NO PART NO.	#*	GASKET,1	ｶﾞｽｹｯﾄ	2	
16	NO PART NO.	#*	GASKET,2	ｶﾞｽｹｯﾄ	2	
17	NO PART NO.	#*	GASKET,1	ｶﾞｽｹｯﾄ	2	
18	NO PART NO.	#*	GASKET,2	ｶﾞｽｹｯﾄ	2	
19	R-402-65004-22		BOLT	ﾎﾞﾙﾄ	4	
20	R-402-00710-12		WASHER	ﾜｯｼｬ	4	
21	NO PART NO.	#*	SEAL,OIL	ｼｰﾙ	1	
22	NO PART NO.	#	RING,SNAP	ｽﾅｯﾌﾟﾘﾝｸﾞ	1	
23	NO PART NO.	#*	SEAL,OIL	ｼｰﾙ	1	
24	23657-12002		PACKING	ﾊﾟｯｷﾝｸﾞ	1	
25	01402-00010		NUT	ﾅｯﾄ	2	
26	02010-00010		WASHER	ﾜｯｼｬ	2	
27	02000-00010		WASHER	ﾜｯｼｬ	2	
A2	232N7-60101		ELBOW-ASSY	ｴﾙﾎﾞｱｯｾﾝ	1	INC.28,29
28	NO PART NO.	#	ELBOW	ｴﾙﾎﾞ	1	
29	03320-00180		O-RING	Oﾘﾝｸﾞ	1	
A3	234H7-62351		FITTING-ASSY,HOSE	ﾎｰｽﾌｨｯﾃｨﾝｸﾞｱｯｾﾝ	1	INC.30,31
30	NO PART NO.	#	FITTING,HOSE	ﾌｨｯﾃｨﾝｸﾞ	1	
31	03320-00180		O-RING	Oﾘﾝｸﾞ	1	
A4	234H7-62301		FITTING-ASSY,HOSE	ﾎｰｽﾌｨｯﾃｨﾝｸﾞｱｯｾﾝ	1	INC.31,32
32	NO PART NO.	#	FITTING,HOSE	ﾌｨｯﾃｨﾝｸﾞ	1	
33	03320-00180		O-RING	Oﾘﾝｸﾞ	1	
A5	271A7-60351		ADAPTER-ASSY	ｱﾀﾞﾌﾟﾀｱｯｾﾝ	1	INC.33,34
34	NO PART NO.	#	ADAPTER	ｱﾀﾞﾌﾟﾀ	1	
35	03320-00180		O-RING	Oﾘﾝｸﾞ	1	

FIG.191 CONTROL VALVE [2SV]

(F5027310) コントロールバルブ

KIT
K1 901

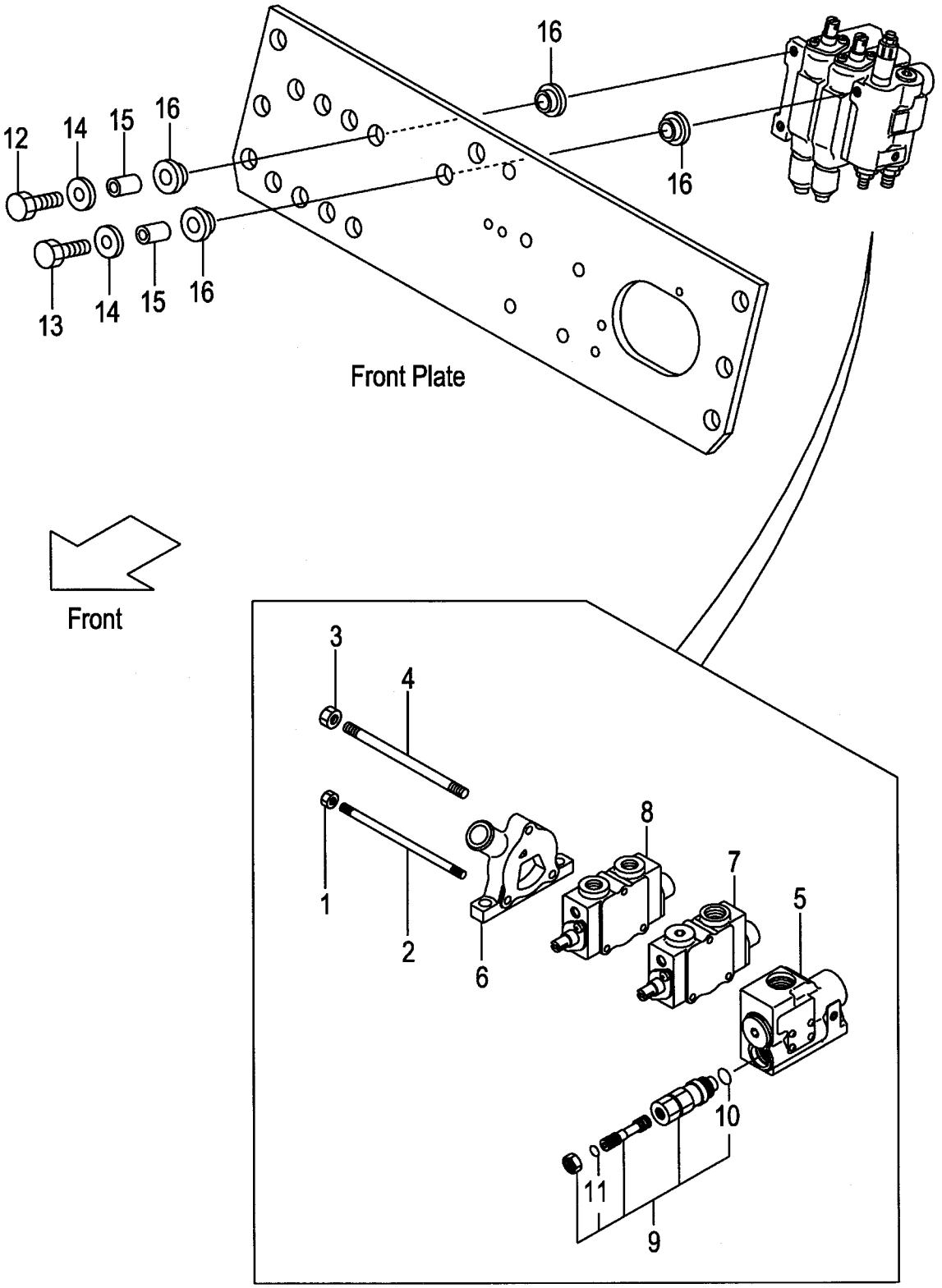

A:FG20C17 FG20T17 FG25C17 FG25T17 D:FD20C17 FD20T17 FD25C17 FD25T17
B:FG20C6 FG20T6 FG25C6 FG25T6 E:FD20C6 FD20T6 FD25C6 FD25T6
C:FG20W6 FG25W6 F:FD20W6 FD25W6

FIG.191
(F5027310)

Item No	Part No.	Mark	Description		Req'd	Remarks : Serial No.
A1	234A7-30202		VALVE-ASSY,CONTROL	ｺﾝﾄﾛｰﾙﾊﾞﾙﾌﾞｱｯｾﾝ	1	INC.1-11
-	534A2-40402		VALVE-ASSY,CONTROL	ｺﾝﾄﾛｰﾙﾊﾞﾙﾌﾞｱｯｾﾝ	1	B,E [EXC][EXE][EXK][EXN][OBT] [EXB/OBT] INC.1-11
-	534A4-60202		VALVE-ASSY,CONTROL	ｺﾝﾄﾛｰﾙﾊﾞﾙﾌﾞｱｯｾﾝ	1	[VLS]
901	B-2101A-30016	K1	KIT,SEAL	ｼｰﾙｷｯﾄ	1	INC.10,11
1	B-93118-08652		NUT	ﾅｯﾄ	2	
2	B-21011-31106		ROD,TIE	ﾛｯﾄﾞ	2	
3	B-93128-10082		NUT	ﾅｯﾄ	1	
4	B-21011-31105		ROD,TIE	ﾛｯﾄﾞ	1	
5	B-21013-37344		SECTION,INLET	ｲﾝﾚｯﾄｾｸｼｮﾝ	1	SEE FIG.195
-	B-21013-37349		SECTION,INLET	ｲﾝﾚｯﾄｾｸｼｮﾝ	1	B,E [EXC][EXE][EXK][EXN][OBT] [EXB/OBT]SEE FIG.195
6	B-21011-30134		SECTION,OUTLET	ｱｳﾄﾚｯﾄｾｸｼｮﾝ	1	
7	B-21013-36432		SECTION,SPOOL	ｽﾌﾟｰﾙｾｸｼｮﾝ	1	(LIFT)SEE FIG.196
8	B-21013-36433		SECTION,SPOOL	ｽﾌﾟｰﾙｾｸｼｮﾝ	1	(TILT)SEE FIG.197
9	63130-25614		VALVE,MAIN-RELIEF	ﾊﾞﾙﾌﾞ	1	INC.10,11
10	NO PART NO.	#*	O-RING	Oﾘﾝｸﾞ	1	
11	NO PART NO.	#*	O-RING	Oﾘﾝｸﾞ	1	
12	216G7-32041		BOLT	ﾎﾞﾙﾄ	2	
13	234A7-32001		BOLT	ﾎﾞﾙﾄ	1	
14	216G7-32021		WASHER,PLANE	ﾜｯｼｬ	3	
15	216G7-32011		COLLAR	ｶﾗｰ	3	
16	216G7-32001		RUBBER,VALVE	ﾗﾊﾞｰ	6	

FIG.192 CONTROL VALVE [3SV]

(F5027320) コントロールバルブ

KIT

K1 901

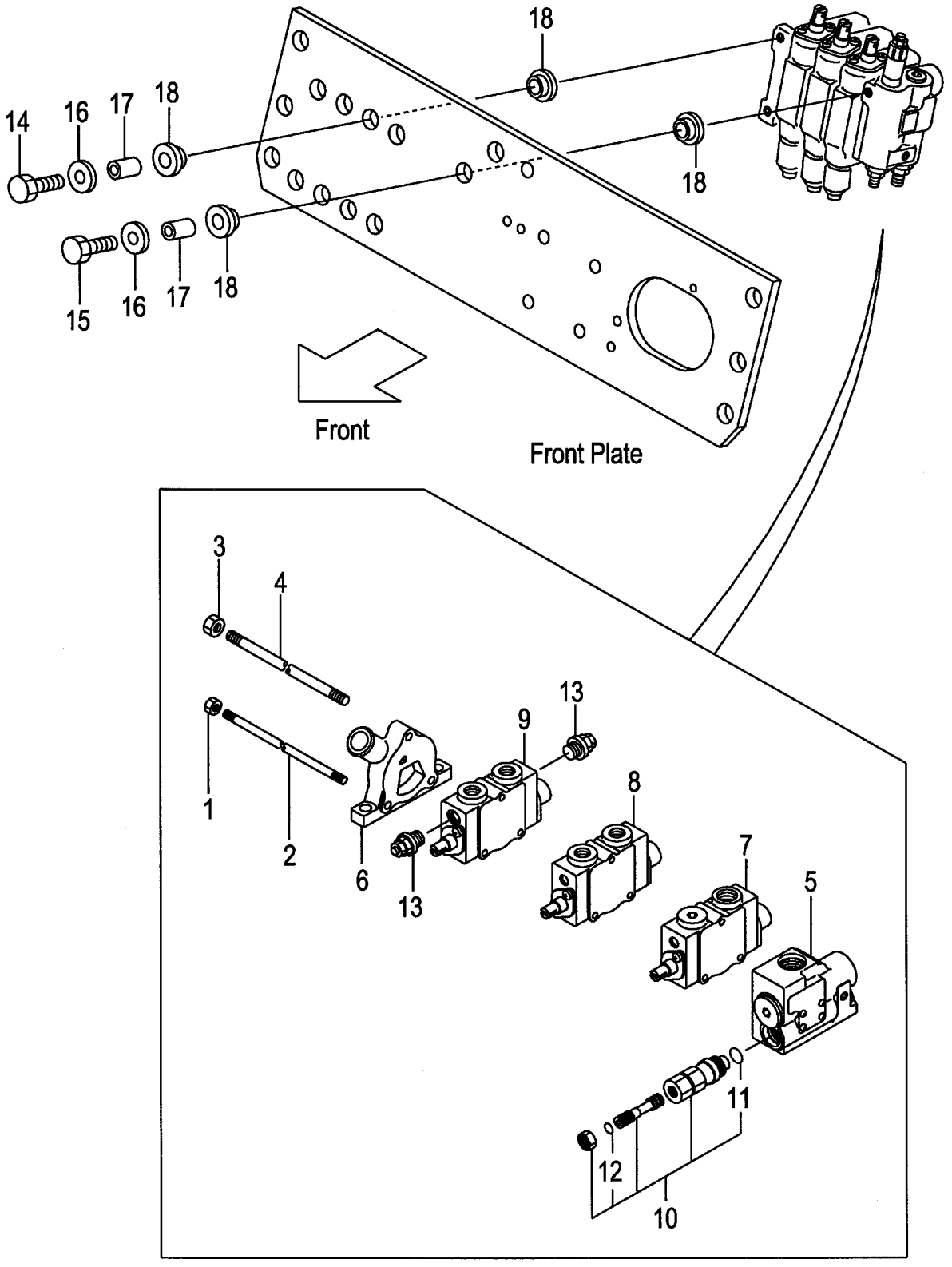

A:FG20C17 FG20T17 FG25C17 FG25T17 D:FD20C17 FD20T17 FD25C17 FD25T17
B:FG20C6 FG20T6 FG25C6 FG25T6 E:FD20C6 FD20T6 FD25C6 FD25T6
C:FG20W6 FG25W6 F:FD20W6 FD25W6

FIG.192
(F5027320)

Item No	Part No.	Mark	Description		Req'd	Remarks : Serial No.
A1	234A7-30302		VALVE-ASSY,CONTROL	ｺﾝﾄﾛｰﾙﾊﾞﾙﾌﾞｱｯｾﾝ	1	[3SV] INC.1-13
-	534A2-40502		VALVE-ASSY,CONTROL	ｺﾝﾄﾛｰﾙﾊﾞﾙﾌﾞｱｯｾﾝ	1	B,E [3SV/EXC&E&K&N][3SV/OBT] INC.1-13
-	534A2-40502		VALVE-ASSY,CONTROL	ｺﾝﾄﾛｰﾙﾊﾞﾙﾌﾞｱｯｾﾝ	1	B,E [3SV/EXB/OBT] INC.1-13
-	534A4-60302		VALVE-ASSY,CONTROL	ｺﾝﾄﾛｰﾙﾊﾞﾙﾌﾞｱｯｾﾝ	1	[3SV/VLS]
901	B-2101A-30016	K1	KIT,SEAL	ｼｰﾙｷｯﾄ	1	[3SV] INC.11,12
1	B-93118-08652		NUT	ﾅｯﾄ	2	[3SV]
2	B-21021-30104		ROD,TIE	ﾛｯﾄﾞ	2	[3SV]
3	B-93128-10082		NUT	ﾅｯﾄ	1	[3SV]
4	B-21021-30103		ROD,TIE	ﾛｯﾄﾞ	1	[3SV]
5	B-21013-37344		SECTION,INLET	ｲﾝﾚｯﾄｾｸｼｮﾝ	1	[3SV]SEE FIG.195
-	B-21013-37349		SECTION,INLET	ｲﾝﾚｯﾄｾｸｼｮﾝ	1	B,E [3SV/EXC&E&K&N][3SV/OBT] SEE FIG.195
-	B-21013-37349		SECTION,INLET	ｲﾝﾚｯﾄｾｸｼｮﾝ	1	B,E [3SV/EXB/OBT]SEE FIG.195
6	B-21011-30134		SECTION,OUTLET	ｱｳﾄﾚｯﾄｾｸｼｮﾝ	1	[3SV]
7	B-21013-36432		SECTION,SPOOL	ｽﾌﾟｰﾙｾｸｼｮﾝ	1	[3SV](LIFT)SEE FIG.196
8	B-21013-36433		SECTION,SPOOL	ｽﾌﾟｰﾙｾｸｼｮﾝ	1	[3SV](TILT)SEE FIG.197
9	B-21013-39701		SECTION,SPOOL	ｽﾌﾟｰﾙｾｸｼｮﾝ	1	[3SV](3RD)SEE FIG.198
10	63130-25614		VALVE,MAIN-RELIEF	ﾊﾞﾙﾌﾞ	1	[3SV] INC.11,12
11	NO PART NO.	#*	O-RING	Oﾘﾝｸﾞ	1	[3SV]
12	NO PART NO.	#*	O-RING	Oﾘﾝｸﾞ	1	[3SV]
13	B-C0003-30301		VALVE,SHUT-OFF	ﾊﾞﾙﾌﾞ	2	[3SV]
14	216G7-32041		BOLT	ﾎﾞﾙﾄ	2	[3SV]
15	234A7-32001		BOLT	ﾎﾞﾙﾄ	1	[3SV]
16	216G7-32021		WASHER,PLANE	ﾜｯｼｬ	3	[3SV]
17	216G7-32011		COLLAR	ｶﾗｰ	3	[3SV]
18	216G7-32001		RUBBER,VALVE	ﾗﾊﾞｰ	6	[3SV]

FIG.193 CONTROL VALVE [4SV]

(F5027330) コントロールバルブ

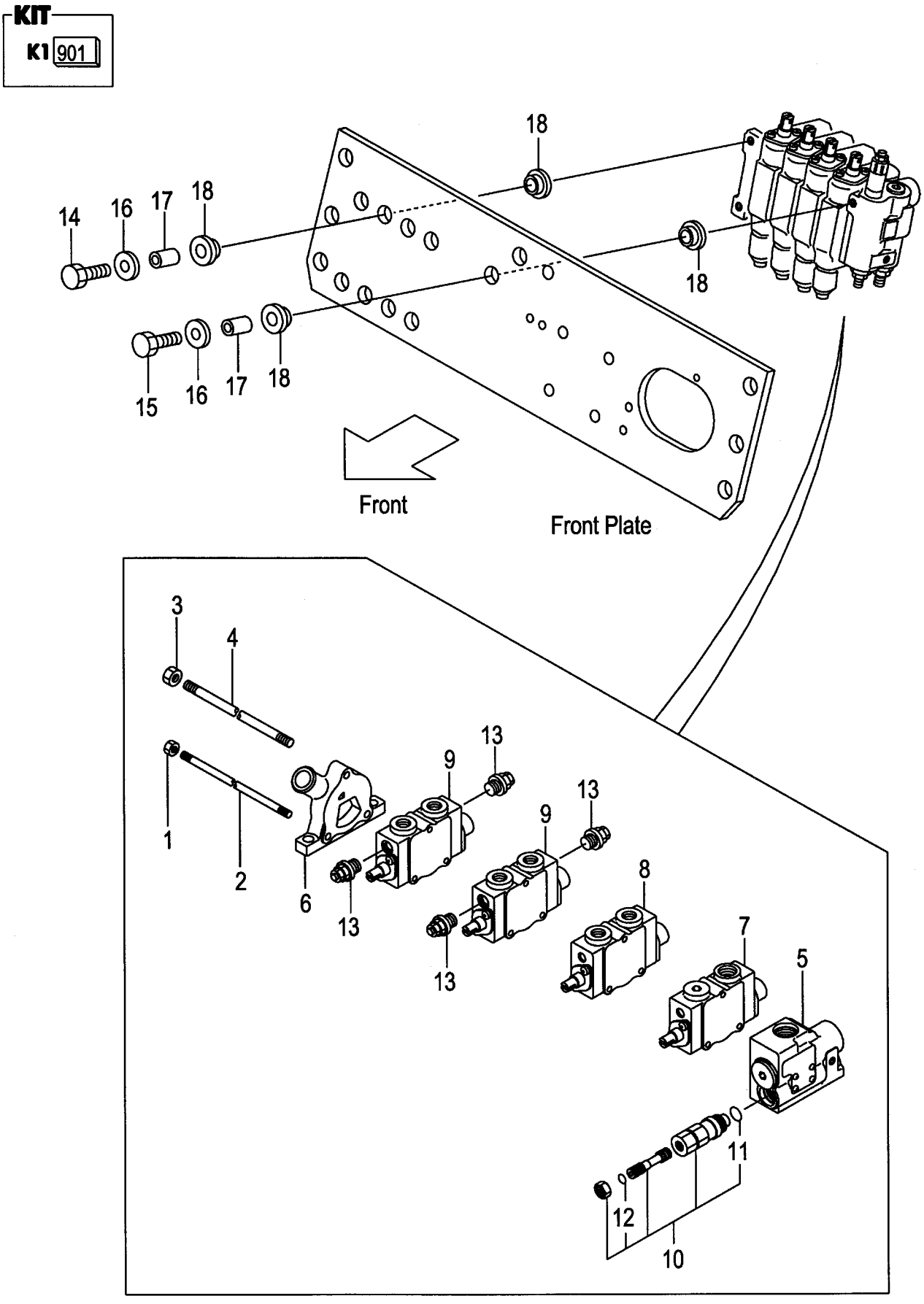

A:FG20C17 FG20T17 FG25C17 FG25T17 D:FD20C17 FD20T17 FD25C17 FD25T17
B:FG20C6 FG20T6 FG25C6 FG25T6 E:FD20C6 FD20T6 FD25C6 FD25T6
C:FG20W6 FG25W6 F:FD20W6 FD25W6

FIG.193
(F5027330)

Item No	Part No.	Mark	Description		Req'd	Remarks : Serial No.
A1	234A7-30402		VALVE-ASSY,CONTROL	ｺﾝﾄﾛｰﾙﾊﾞﾙﾌﾞｱｯｾﾝ	1	[4SV] INC.1-13
-	534A2-40602		VALVE-ASSY,CONTROL	ｺﾝﾄﾛｰﾙﾊﾞﾙﾌﾞｱｯｾﾝ	1	B,E [4SV/EXC&E&K&N][4SV/OBT] INC.1-13
-	534A2-40602		VALVE-ASSY,CONTROL	ｺﾝﾄﾛｰﾙﾊﾞﾙﾌﾞｱｯｾﾝ	1	B,E [4SV/EXB/OBT] INC.1-13
-	534A4-60402		VALVE-ASSY,CONTROL	ｺﾝﾄﾛｰﾙﾊﾞﾙﾌﾞｱｯｾﾝ	1	[4SV/VLS]
901	B-2101A-30016	K1	KIT,SEAL	ｼｰﾙｷｯﾄ	1	[4SV] INC.11,12
1	B-93118-08652		NUT	ﾅｯﾄ	2	[4SV]
2	B-21031-30104		ROD,TIE	ﾛｯﾄﾞ	2	[4SV]
3	B-93128-10082		NUT	ﾅｯﾄ	1	[4SV]
4	B-21031-30103		ROD,TIE	ﾛｯﾄﾞ	1	[4SV]
5	B-21013-37344		SECTION,INLET	ｲﾝﾚｯﾄｾｸｼｮﾝ	1	[4SV]SEE FIG.195
-	B-21013-37349		SECTION,INLET	ｲﾝﾚｯﾄｾｸｼｮﾝ	1	B,E [4SV/EXC&E&K&N][4SV/OBT] SEE FIG.195
-	B-21013-37349		SECTION,INLET	ｲﾝﾚｯﾄｾｸｼｮﾝ	1	B,E [4SV/EXB/OBT]SEE FIG.195
6	B-21011-30134		SECTION,OUTLET	ｱｳﾄﾚｯﾄｾｸｼｮﾝ	1	[4SV]
7	B-21013-36432		SECTION,SPOOL	ｽﾌﾟｰﾙｾｸｼｮﾝ	1	[4SV](LIFT)SEE FIG.196
8	B-21013-36433		SECTION,SPOOL	ｽﾌﾟｰﾙｾｸｼｮﾝ	1	[4SV](TILT)SEE FIG.197
9	B-21013-39701		SECTION,SPOOL	ｽﾌﾟｰﾙｾｸｼｮﾝ	2	[4SV](3RD,4TH)SEE FIG.198
10	63130-25614		VALVE,MAIN-RELIEF	ﾊﾞﾙﾌﾞ	1	[4SV] INC.11,12
11	NO PART NO.	#*	O-RING	Oﾘﾝｸﾞ	1	[4SV]
12	NO PART NO.	#*	O-RING	Oﾘﾝｸﾞ	1	[4SV]
13	B-C0003-30301		VALVE,SHUT-OFF	ﾊﾞﾙﾌﾞ	4	[4SV]
14	216G7-32041		BOLT	ﾎﾞﾙﾄ	2	[4SV]
15	234A7-32001		BOLT	ﾎﾞﾙﾄ	1	[4SV]
16	216G7-32021		WASHER,PLANE	ﾜｯｼｬ	3	[4SV]
17	216G7-32011		COLLAR	ｶﾗｰ	3	[4SV]
18	216G7-32001		RUBBER,VALVE	ﾗﾊﾞｰ	6	[4SV]

FIG.194 CONTROL VALVE [5SV]

(F5027340) コントロールバルブ

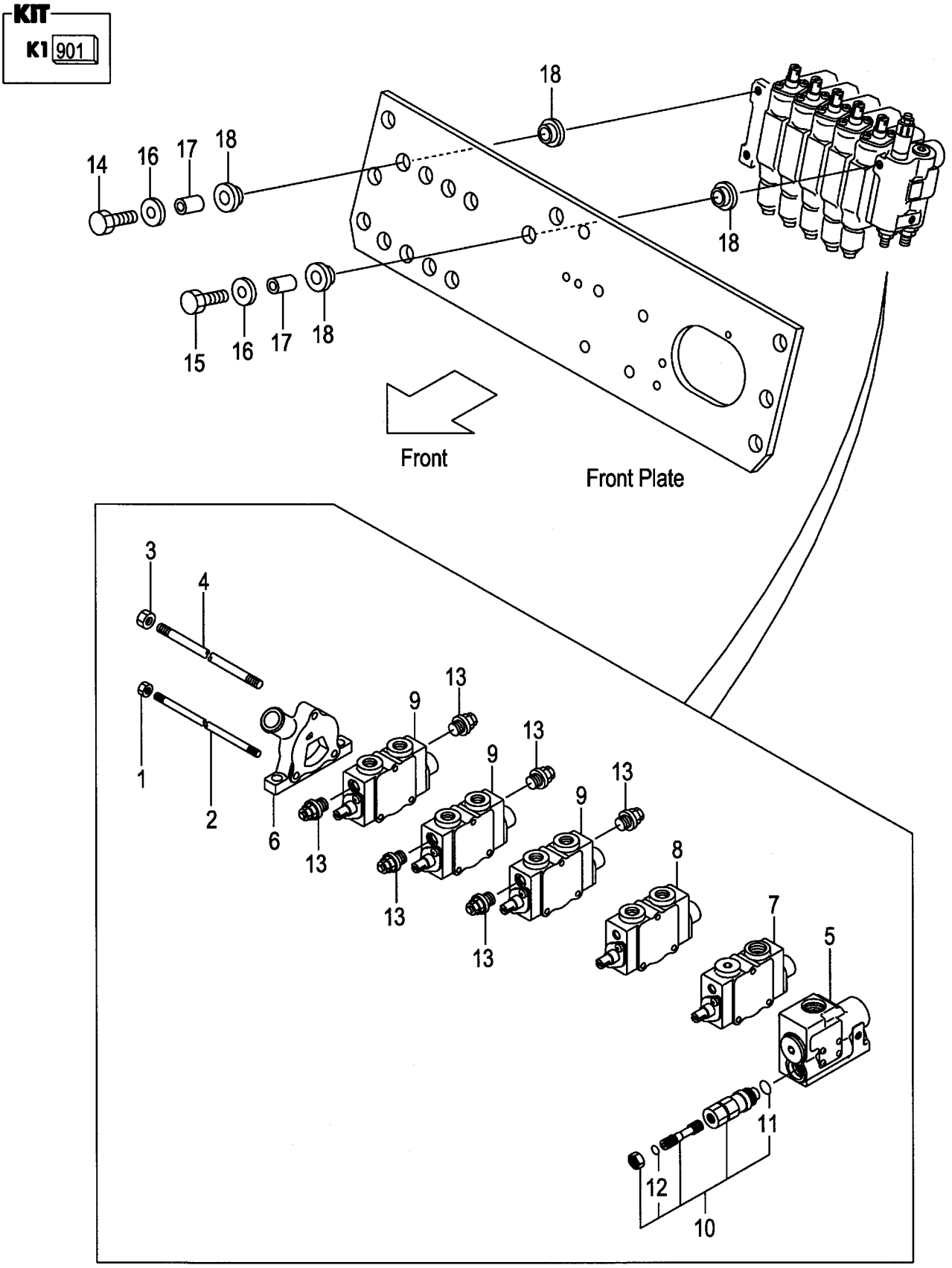

A:FG20C17 FG20T17 FG25C17 FG25T17 D:FD20C17 FD20T17 FD25C17 FD25T17
B:FG20C6 FG20T6 FG25C6 FG25T6 E:FD20C6 FD20T6 FD25C6 FD25T6
C:FG20W6 FG25W6 F:FD20W6 FD25W6

FIG.194
(F5027340)

Item No	Part No.	Mark	Description		Req'd	Remarks : Serial No.
A1	234A7-30502		VALVE-ASSY,CONTROL	ｺﾝﾄﾛｰﾙﾊﾞﾙﾌﾞｱｯｾﾝ	1	[5SV] INC.1-13
-	534A2-40702		VALVE-ASSY,CONTROL	ｺﾝﾄﾛｰﾙﾊﾞﾙﾌﾞｱｯｾﾝ	1	B,E [5SV/EXC&E&K&N][5SV/OBT] INC.1-13
-	534A2-40702		VALVE-ASSY,CONTROL	ｺﾝﾄﾛｰﾙﾊﾞﾙﾌﾞｱｯｾﾝ	1	B,E [5SV/EXB/OBT] INC.1-13
-	534A4-60502		VALVE-ASSY,CONTROL	ｺﾝﾄﾛｰﾙﾊﾞﾙﾌﾞｱｯｾﾝ	1	[5SV/VLS]
901	B-2101A-30016	K1	KIT,SEAL	ｼｰﾙｷｯﾄ	1	[5SV] INC.11,12
1	B-93118-08652		NUT	ﾅｯﾄ	2	[5SV]
2	B-21041-30104		ROD,TIE	ﾛｯﾄﾞ	2	[5SV]
3	B-93128-10082		NUT	ﾅｯﾄ	1	[5SV]
4	B-21041-30103		ROD,TIE	ﾛｯﾄﾞ	1	[5SV]
5	B-21013-37344		SECTION,INLET	ｲﾝﾚｯﾄｾｸｼｮﾝ	1	[5SV]SEE FIG.195
-	B-21013-37349		SECTION,INLET	ｲﾝﾚｯﾄｾｸｼｮﾝ	1	B,E [5SV/EXC&E&K&N][5SV/OBT] SEE FIG.195
-	B-21013-37349		SECTION,INLET	ｲﾝﾚｯﾄｾｸｼｮﾝ	1	B,E [5SV/EXB/OBT]SEE FIG.195
6	B-21011-30134		SECTION,OUTLET	ｱｳﾄﾚｯﾄｾｸｼｮﾝ	1	[5SV]
7	B-21013-36432		SECTION,SPOOL	ｽﾌﾟｰﾙｾｸｼｮﾝ	1	[5SV](LIFT)SEE FIG.196
8	B-21013-36433		SECTION,SPOOL	ｽﾌﾟｰﾙｾｸｼｮﾝ	1	[5SV](TILT)SEE FIG.197
9	B-21013-39701		SECTION,SPOOL	ｽﾌﾟｰﾙｾｸｼｮﾝ	3	[5SV](3RD,4TH,5TH)SEE FIG.198
10	63130-25614		VALVE,MAIN-RELIEF	ﾊﾞﾙﾌﾞ	1	[5SV] INC.11,12
11	NO PART NO.	#*	O-RING	Oﾘﾝｸﾞ	1	[5SV]
12	NO PART NO.	#*	O-RING	Oﾘﾝｸﾞ	1	[5SV]
13	B-C0003-30301		VALVE,SHUT-OFF	ﾊﾞﾙﾌﾞ	6	[5SV]
14	216G7-32041		BOLT	ﾎﾞﾙﾄ	2	[5SV]
15	234A7-32001		BOLT	ﾎﾞﾙﾄ	1	[5SV]
16	216G7-32021		WASHER,PLANE	ﾜｯｼｬ	3	[5SV]
17	216G7-32011		COLLAR	ｶﾗｰ	3	[5SV]
18	216G7-32001		RUBBER,VALVE	ﾗﾊﾞｰ	6	[5SV]

FIG.195 INLET SECTION

(F5027350) インレットセクション

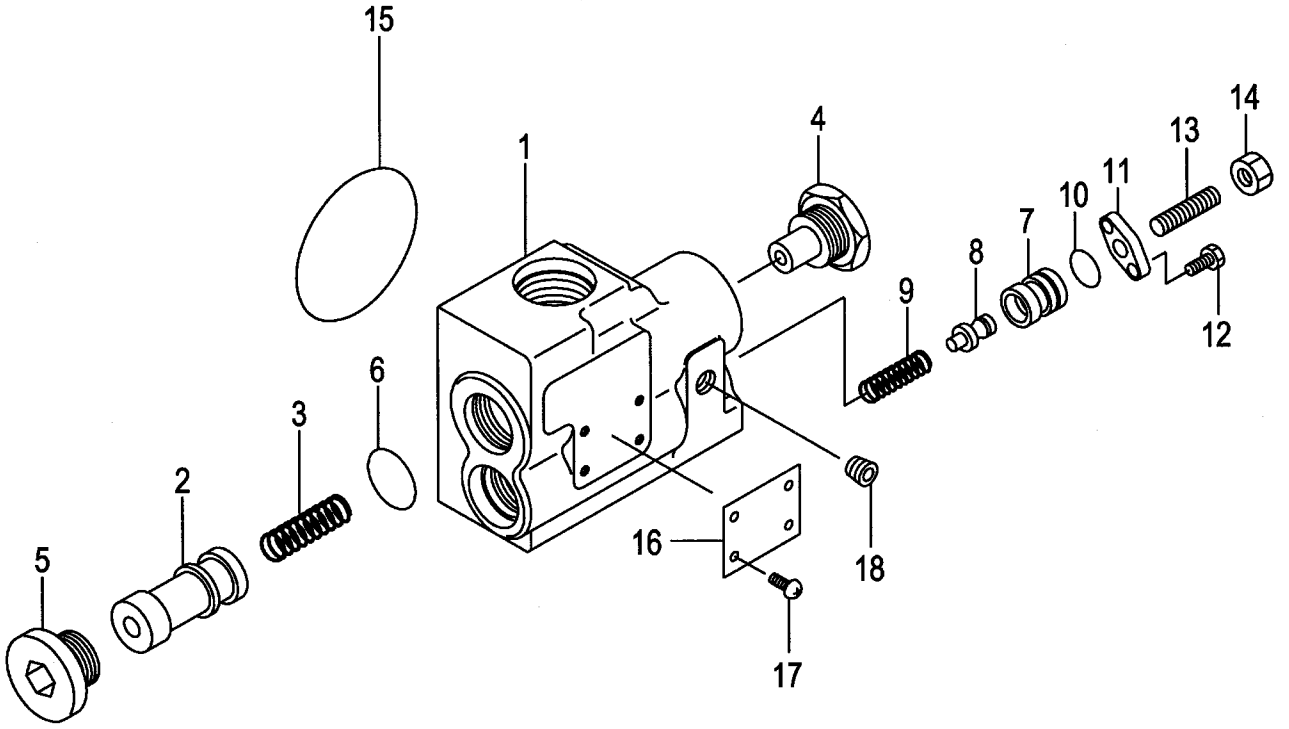

A:FG20C17 FG20T17 FG25C17 FG25T17 D:FD20C17 FD20T17 FD25C17 FD25T17
B:FG20C6 FG20T6 FG25C6 FG25T6 E:FD20C6 FD20T6 FD25C6 FD25T6
C:FG20W6 FG25W6 F:FD20W6 FD25W6

FIG.195
(F5027350)

Item No	Part No.	Mark	Description		Req'd	Remarks : Serial No.
A1	B-21013-37344		SECTION-ASSY,INLET	ｲﾝﾚｯﾄｾｸｼｮﾝｱｯｾﾝ	1	INC.1-18
-	B-21013-37349		SECTION-ASSY,INLET	ｲﾝﾚｯﾄｾｸｼｮﾝｱｯｾﾝ	1	B,E [EXC][EXE][EXK][EXN][OBT] [EXB/OBT] INC.1-18
1	NO PART NO.	#	HOUSING,INLET	ﾊｳｼﾞﾝｸﾞ	1	
2	NO PART NO.	#	SPOOL	ｽﾌﾟｰﾙ	1	
3	B-21731-30802		SPRING	ｽﾌﾟﾘﾝｸﾞ	1	
4	B-21733-40212		CONNECTOR	ｺﾈｸﾀ	1	
5	B-21731-30613		PLUG	ﾌﾟﾗｸﾞ	1	
6	B-95113-02400		O-RING	Oﾘﾝｸﾞ	1	
7	B-21731-30703		HOUSING	ﾊｳｼﾞﾝｸﾞ	1	
8	B-21731-30502		POPPET	ﾎﾟﾍﾟｯﾄ	1	
9	B-21731-30306		SPRING	ｽﾌﾟﾘﾝｸﾞ	1	
-	B-21731-30307		SPRING	ｽﾌﾟﾘﾝｸﾞ	1	B,E [EXC][EXE][EXK][EXN][OBT] [EXB/OBT]
10	B-95111-01200		O-RING	Oﾘﾝｸﾞ	1	
11	B-21731-30406		PLATE	ﾌﾟﾚｰﾄ	1	
12	B-92703-06181		BOLT	ﾎﾞﾙﾄ	2	
13	B-91511-08180		SCREW	ｽｸﾘｭ	1	
14	B-93364-08052		NUT	ﾅｯﾄ	1	
15	B-21001-00106		O-RING	Oﾘﾝｸﾞ	1	
16	NO PART NO.	#	PLATE,NAME	ﾌﾟﾚｰﾄ	1	
17	NO PART NO.	#	SCREW	ｽｸﾘｭ	4	
18	B-97123-01111		PLUG	ﾌﾟﾗｸﾞ	1	

FIG.196 SPOOL SECTION (LIFT)

(F5027360) スプールセクション

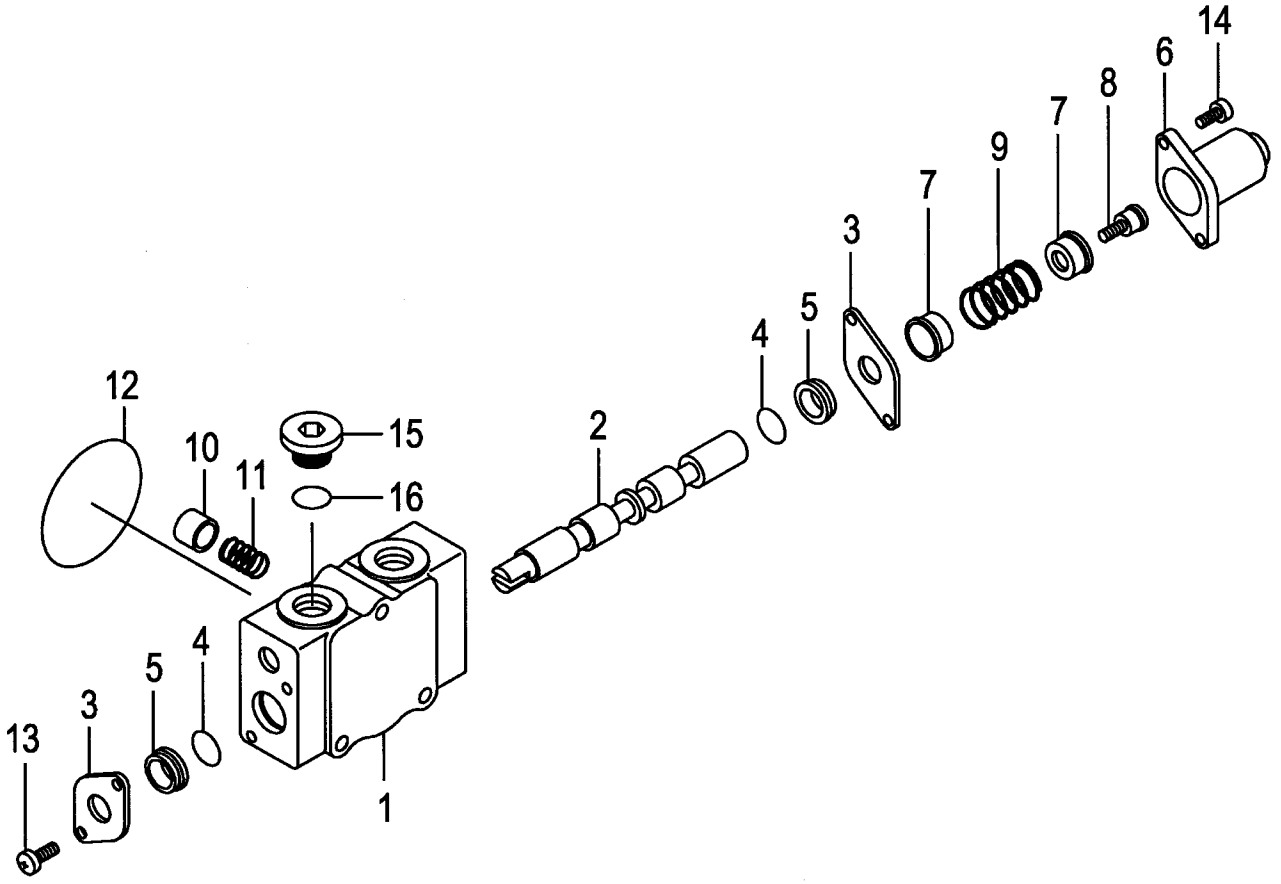

A:FG20C17 FG20T17 FG25C17 FG25T17 D:FD20C17 FD20T17 FD25C17 FD25T17
B:FG20C6 FG20T6 FG25C6 FG25T6 E:FD20C6 FD20T6 FD25C6 FD25T6
C:FG20W6 FG25W6 F:FD20W6 FD25W6

FIG.196
(F5027360)

Item No	Part No.	Mark	Description		Req'd	Remarks : Serial No.
A1	B-21013-36432		SECTION-ASSY,SPOOL	ｽﾌﾟｰﾙｾｸｼｮﾝｱｯｾﾝ	1	INC.1-16
1	NO PART NO.	#	HOUSING,VALVE	ﾊｳｼﾞﾝｸﾞ	1	
2	NO PART NO.	#	SPOOL	ｽﾌﾟｰﾙ	1	
3	B-21011-31702		PLATE	ﾌﾟﾚｰﾄ	2	
4	B-21001-00689		O-RING	Oﾘﾝｸﾞ	2	
5	B-21011-32801		WIPER	ﾜｲﾊﾟ	2	
6	B-21011-31011		CAP	ｷｬｯﾌﾟ	1	
7	B-21011-30702		SEAT	ｼｰﾄ	2	
8	B-21011-30507		SCREW	ｽｸﾘｭ	1	
9	B-21011-30603		SPRING	ｽﾌﾟﾘﾝｸﾞ	1	
10	B-21011-32404		POPPET	ﾎﾟﾍﾟｯﾄ	1	
11	B-21011-30604		SPRING	ｽﾌﾟﾘﾝｸﾞ	1	
12	B-21001-00106		O-RING	Oﾘﾝｸﾞ	1	
13	B-91111-60102		SCREW	ｽｸﾘｭ	2	
14	B-92703-06181		BOLT	ﾎﾞﾙﾄ	2	
15	B-21001-90408		PLUG	ﾌﾟﾗｸﾞ	1	
16	B-95113-01800		O-RING	Oﾘﾝｸﾞ	1	

FIG.197 SPOOL SECTION (TILT)

(F5027370) スプールセクション

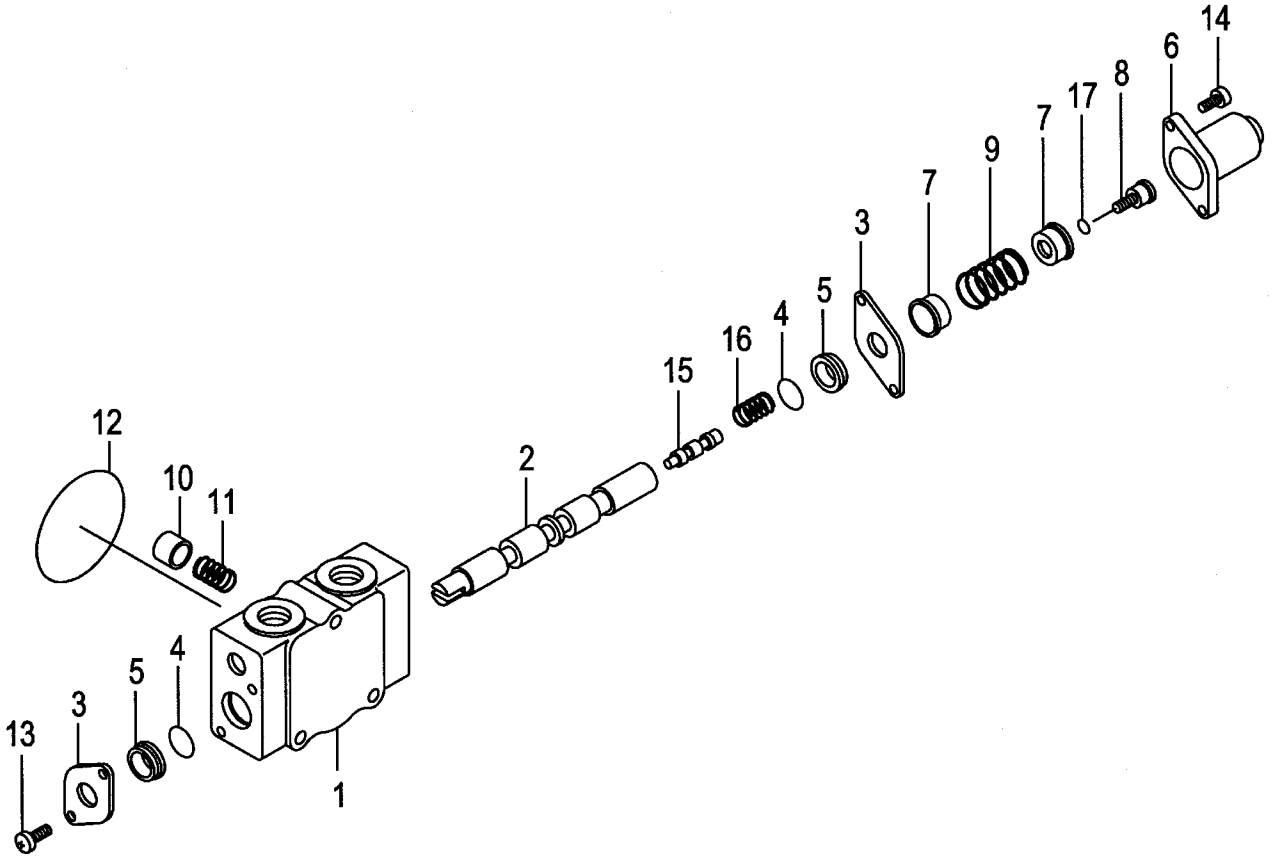

A:FG20C17 FG20T17 FG25C17 FG25T17 D:FD20C17 FD20T17 FD25C17 FD25T17
B:FG20C6 FG20T6 FG25C6 FG25T6 E:FD20C6 FD20T6 FD25C6 FD25T6
C:FG20W6 FG25W6 F:FD20W6 FD25W6

FIG.197
(F5027370)

Item No	Part No.	Mark	Description		Req'd	Remarks : Serial No.
A1	B-21013-36433		SECTION-ASSY,SPOOL	ｽﾌﾟｰﾙｾｸｼｮﾝｱｯｾﾝ	1	INC.1-17
1	NO PART NO.	#	HOUSING,VALVE	ﾊｳｼﾞﾝｸﾞ	1	
2	NO PART NO.	#	SPOOL	ｽﾌﾟｰﾙ	1	
3	B-21011-31702		PLATE	ﾌﾟﾚｰﾄ	2	
4	B-21001-00689		O-RING	Oﾘﾝｸﾞ	2	
5	B-21011-32801		WIPER	ﾜｲﾊﾟ	2	
6	B-21011-31011		CAP	ｷｬｯﾌﾟ	1	
7	B-21011-30702		SEAT	ｼｰﾄ	2	
8	B-21011-30528		SCREW	ｽｸﾘｭ	1	
9	B-21011-30603		SPRING	ｽﾌﾟﾘﾝｸﾞ	1	
10	B-21011-32404		POPPET	ﾎﾟﾍﾟｯﾄ	1	
11	B-21011-30604		SPRING	ｽﾌﾟﾘﾝｸﾞ	1	
12	B-21001-00106		O-RING	Oﾘﾝｸﾞ	1	
13	B-91111-60102		SCREW	ｽｸﾘｭ	2	
14	B-92703-06181		BOLT	ﾎﾞﾙﾄ	2	
15	NO PART NO.	#	VALVE	ﾊﾞﾙﾌﾞ	1	
16	B-21011-30618		SPRING	ｽﾌﾟﾘﾝｸﾞ	1	
17	B-95133-00500		O-RING	Oﾘﾝｸﾞ	1	

FIG.198 SPOOL SECTION [3SV][4SV][5SV]

(F5027380) スプールセクション

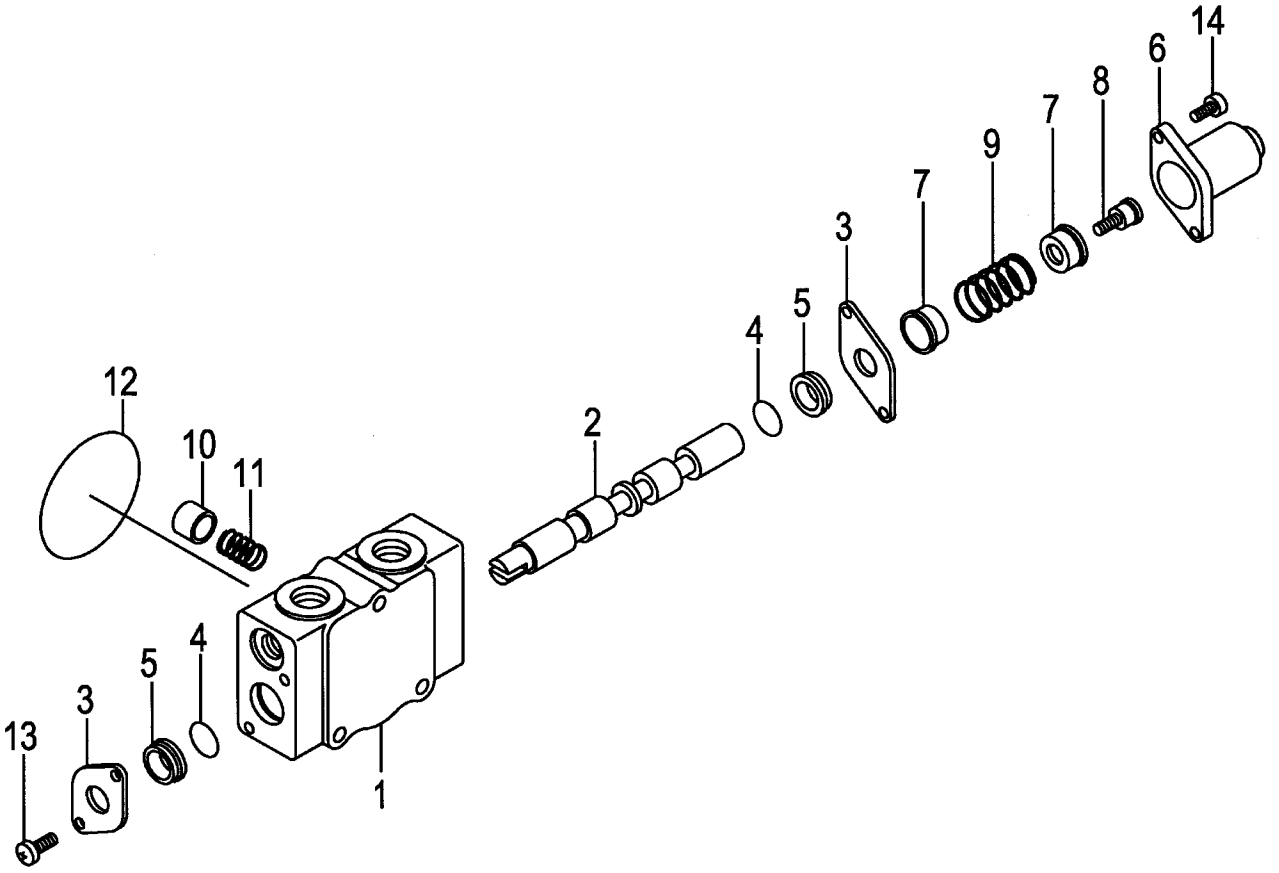

A:FG20C17 FG20T17 FG25C17 FG25T17 D:FD20C17 FD20T17 FD25C17 FD25T17
B:FG20C6 FG20T6 FG25C6 FG25T6 E:FD20C6 FD20T6 FD25C6 FD25T6
C:FG20W6 FG25W6 F:FD20W6 FD25W6

FIG.198
(F5027380)

Item No	Part No.	Mark	Description		Req'd	Remarks : Serial No.
A1	B-21013-39701		SECTION-ASSY,SPOOL	ｽﾌﾟｰﾙｾｸｼｮﾝｱｯｾﾝ	1	[3SV] INC.1-14
-	B-21013-39701		SECTION-ASSY,SPOOL	ｽﾌﾟｰﾙｾｸｼｮﾝｱｯｾﾝ	2	[4SV] INC.1-14
-	B-21013-39701		SECTION-ASSY,SPOOL	ｽﾌﾟｰﾙｾｸｼｮﾝｱｯｾﾝ	3	[5SV] INC.1-14
1	NO PART NO.	#	HOUSING,VALVE	ﾊｳｼﾞﾝｸﾞ	1	[3SV]
-	NO PART NO.	#	HOUSING,VALVE	ﾊｳｼﾞﾝｸﾞ	2	[4SV]
-	NO PART NO.	#	HOUSING,VALVE	ﾊｳｼﾞﾝｸﾞ	3	[5SV]
2	NO PART NO.	#	SPOOL	ｽﾌﾟｰﾙ	1	[3SV]
-	NO PART NO.	#	SPOOL	ｽﾌﾟｰﾙ	2	[4SV]
-	NO PART NO.	#	SPOOL	ｽﾌﾟｰﾙ	3	[5SV]
3	B-21011-31702		PLATE	ﾌﾟﾚｰﾄ	2	[3SV]
-	B-21011-31702		PLATE	ﾌﾟﾚｰﾄ	4	[4SV]
-	B-21011-31702		PLATE	ﾌﾟﾚｰﾄ	6	[5SV]
4	B-21001-00689		O-RING	Oﾘﾝｸﾞ	2	[3SV]
-	B-21001-00689		O-RING	Oﾘﾝｸﾞ	4	[4SV]
-	B-21001-00689		O-RING	Oﾘﾝｸﾞ	6	[5SV]
5	B-21011-32801		WIPER	ﾜｲﾊﾟ	2	[3SV]
-	B-21011-32801		WIPER	ﾜｲﾊﾟ	4	[4SV]
-	B-21011-32801		WIPER	ﾜｲﾊﾟ	6	[5SV]
6	B-21011-31011		CAP	ｷｬｯﾌﾟ	1	[3SV]
-	B-21011-31011		CAP	ｷｬｯﾌﾟ	2	[4SV]
-	B-21011-31011		CAP	ｷｬｯﾌﾟ	3	[5SV]
7	B-21011-30702		SEAT	ｼｰﾄ	2	[3SV]
-	B-21011-30702		SEAT	ｼｰﾄ	4	[4SV]
-	B-21011-30702		SEAT	ｼｰﾄ	6	[5SV]
8	B-21011-30507		SCREW	ｽｸﾘｭ	1	[3SV]
-	B-21011-30507		SCREW	ｽｸﾘｭ	2	[4SV]
-	B-21011-30507		SCREW	ｽｸﾘｭ	3	[5SV]
9	B-21011-30603		SPRING	ｽﾌﾟﾘﾝｸﾞ	1	[3SV]
-	B-21011-30603		SPRING	ｽﾌﾟﾘﾝｸﾞ	2	[4SV]
-	B-21011-30603		SPRING	ｽﾌﾟﾘﾝｸﾞ	3	[5SV]
10	B-21011-32404		POPPET	ﾎﾟﾍﾟｯﾄ	1	[3SV]
-	B-21011-32404		POPPET	ﾎﾟﾍﾟｯﾄ	2	[4SV]
-	B-21011-32404		POPPET	ﾎﾟﾍﾟｯﾄ	3	[5SV]
11	B-21011-30604		SPRING	ｽﾌﾟﾘﾝｸﾞ	1	[3SV]
-	B-21011-30604		SPRING	ｽﾌﾟﾘﾝｸﾞ	2	[4SV]
-	B-21011-30604		SPRING	ｽﾌﾟﾘﾝｸﾞ	3	[5SV]
12	B-21001-00106		O-RING	Oﾘﾝｸﾞ	1	[3SV]
-	B-21001-00106		O-RING	Oﾘﾝｸﾞ	2	[4SV]
-	B-21001-00106		O-RING	Oﾘﾝｸﾞ	3	[5SV]
13	B-91111-60102		SCREW	ｽｸﾘｭ	2	[3SV]
-	B-91111-60102		SCREW	ｽｸﾘｭ	4	[4SV]
-	B-91111-60102		SCREW	ｽｸﾘｭ	6	[5SV]
14	B-92703-06181		BOLT	ﾎﾞﾙﾄ	2	[3SV]
-	B-92703-06181		BOLT	ﾎﾞﾙﾄ	4	[4SV]
-	B-92703-06181		BOLT	ﾎﾞﾙﾄ	6	[5SV]

FIG.199 CONTROL VALVE FITTING

(F5027390) コントロールバルブフィッティング

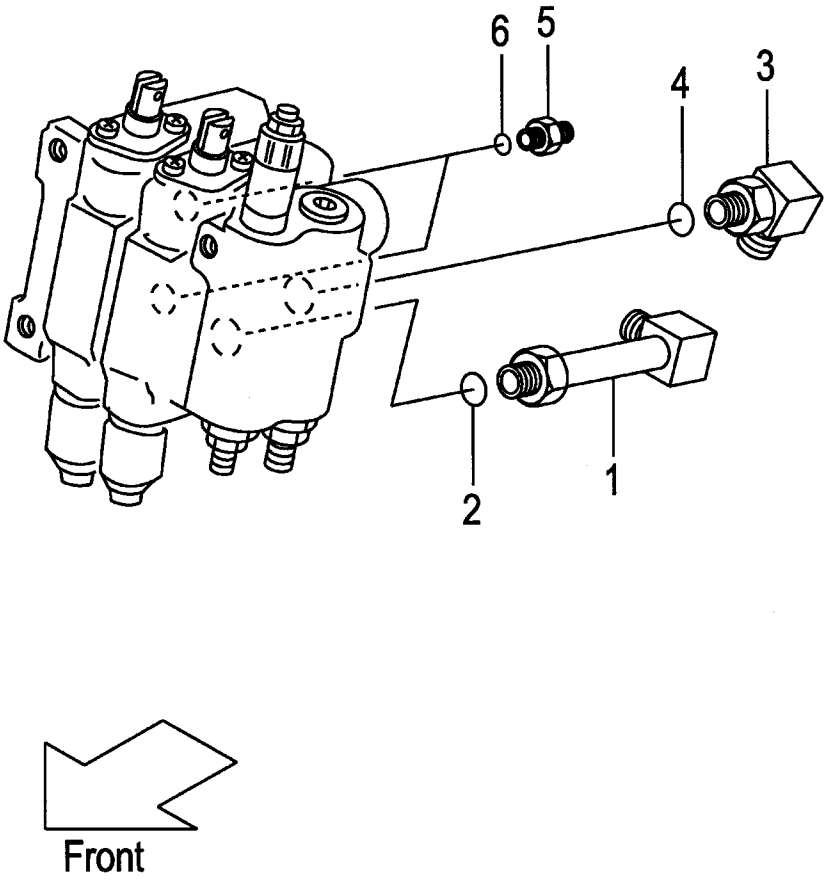

A:FG20C17 FG20T17 FG25C17 FG25T17 C:FD20C17 FD20T17 FD25C17 FD25T17
B:FG20C6 FG20T6 FG25C6 FG25T6 FG20W6 FG25W6 D:FD20C6 FD20T6 FD25C6 FD25T6 FD20W6 FD25W6

Item No	Part No.	Mark	Description		Req'd	Remarks : Serial No.
A1	22777-60301		ELBOW-ASSY	ｴﾙﾎﾞｱｯｾﾝ	1	INC.1,2
1	NO PART NO.	#	ELBOW	ｴﾙﾎﾞ	1	
2	03320-00180		O-RING	Oﾘﾝｸﾞ	1	
A2	04150-30404		ELBOW-ASSY	ｴﾙﾎﾞｱｯｾﾝ	1	INC.3,4
3	NO PART NO.	#	ELBOW	ｴﾙﾎﾞ	1	
4	03320-00180		O-RING	Oﾘﾝｸﾞ	1	
A3	277H7-60601		NIPPLE-ASSY	ﾆｯﾌﾟﾙｱｯｾﾝ	2	INC.5,6
5	NO PART NO.	#	NIPPLE	ﾆｯﾌﾟﾙ	2	
6	03320-00140		O-RING	Oﾘﾝｸﾞ	2	

FIG.200 VALVE CONTROL [2SV]

(F50273A0) ﾊﾞﾙﾌﾞｺﾝﾄﾛｰﾙ

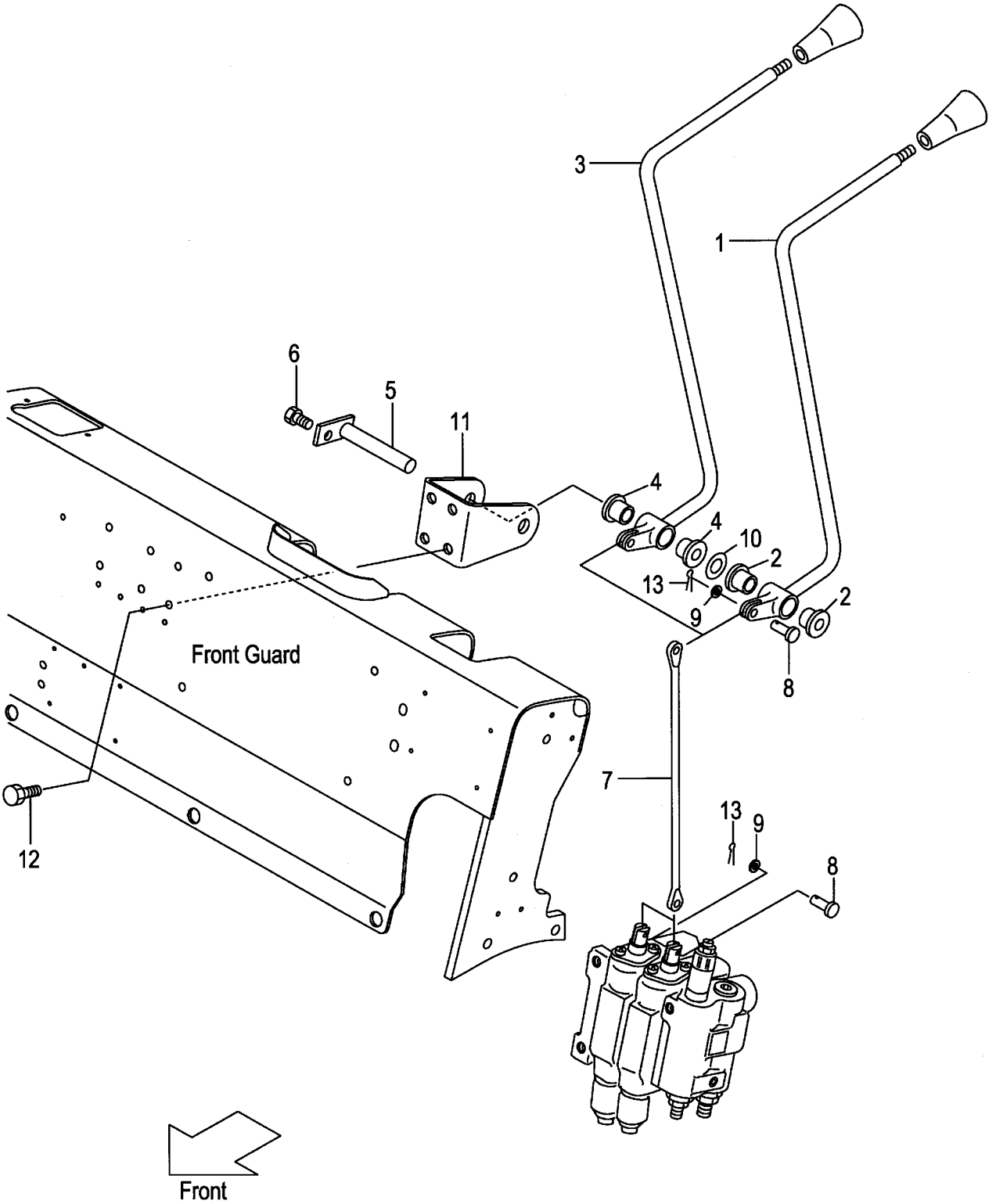

A:FG20C17 FG20T17 FG25C17 FG25T17 C:FD20C17 FD20T17 FD25C17 FD25T17
B:FG20C6 FG20T6 FG25C6 FG25T6 FG20W6 FG25W6 D:FD20C6 FD20T6 FD25C6 FD25T6 FD20W6 FD25W6

Item No	Part No.	Mark	Description		Req'd	Remarks : Serial No.
A1	216G7-40012		LEVER-ASSY,LIFT	ﾘﾌﾄﾚﾊﾞｰｱｯｾﾝ	1	INC.1,2
1	NO PART NO.	#	LEVER,LIFT	ﾚﾊﾞｰ	1	
2	214A7-42071		BUSHING	ﾌﾞｯｼﾝｸﾞ	2	
A2	216G7-40022		LEVER-ASSY,TILT	ﾃｨﾙﾄﾚﾊﾞｰｱｯｾﾝ	1	INC.3,4
3	NO PART NO.	#	LEVER,TILT	ﾚﾊﾞｰ	1	
4	214A7-42071		BUSHING	ﾌﾞｯｼﾝｸﾞ	2	
5	23647-40041		SHAFT,2SV-LEVER	ｼｬﾌﾄ	1	
-	529F3-70401		SHAFT,2SV-LEVER	ｼｬﾌﾄ	1	[FC]
6	01183-06012		BOLT	ﾎﾞﾙﾄ	1	
7	214A7-42171		JOINT	ｼﾞｮｲﾝﾄ	2	
8	22717-40061		PIN,CLEVIS	ﾋﾟﾝ	4	
9	02000-00005		WASHER	ﾜｯｼｬ	4	
10	22517-40051		SHIM,T-0.2	ｼﾑ	3	
11	216G7-42001		BRACKET,VALVE-LEVER	ﾌﾞﾗｹｯﾄ	1	
12	216H3-92281		BOLT	ﾎﾞﾙﾄ	4	
13	02200-16010		PIN,COTTER	ﾋﾟﾝ	4	

FIG.201 VALVE CONTROL [3SV]

(F50273B0) ﾊﾞﾙﾌﾞｺﾝﾄﾛｰﾙ

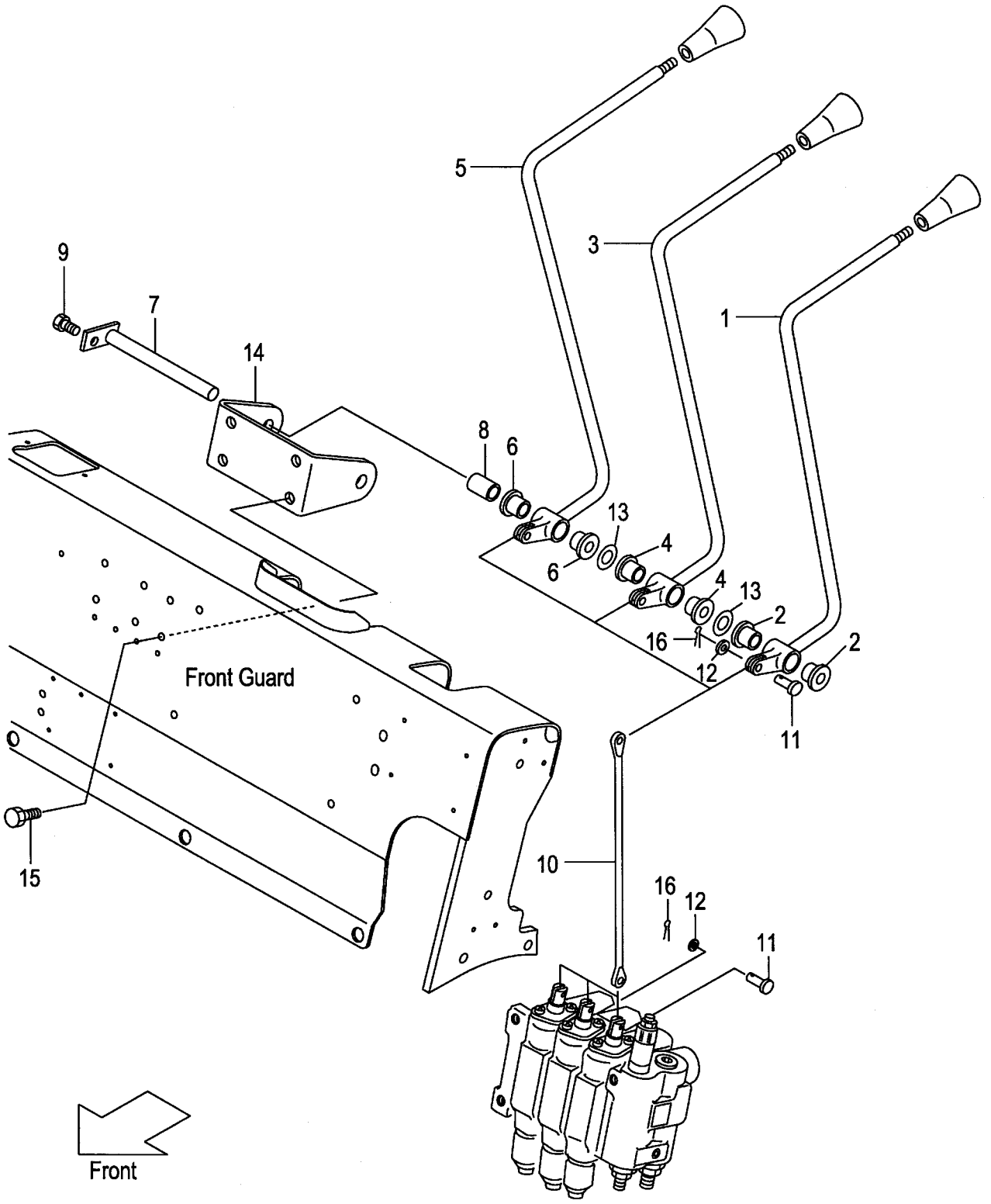

A:FG20C17 FG20T17 FG25C17 FG25T17 C:FD20C17 FD20T17 FD25C17 FD25T17
B:FG20C6 FG20T6 FG25C6 FG25T6 FG20W6 FG25W6 D:FD20C6 FD20T6 FD25C6 FD25T6 FD20W6 FD25W6

Item No	Part No.	Mark	Description		Req'd	Remarks : Serial No.
A1	216G7-40012		LEVER-ASSY,LIFT	ﾘﾌﾄﾚﾊﾞｰｱｯｾﾝ	1	[3SV] INC.1,2
1	NO PART NO.	#	LEVER,LIFT	ﾚﾊﾞｰ	1	[3SV]
2	214A7-42071		BUSHING	ﾌﾞｯｼﾝｸﾞ	2	[3SV]
A2	216G7-40022		LEVER-ASSY,TILT	ﾃｨﾙﾄﾚﾊﾞｰｱｯｾﾝ	1	[3SV] INC.3,4
3	NO PART NO.	#	LEVER,TILT	ﾚﾊﾞｰ	1	[3SV]
4	214A7-42071		BUSHING	ﾌﾞｯｼﾝｸﾞ	2	[3SV]
A3	216G7-40032		LEVER-ASSY,THIRD	ﾚﾊﾞｰｱｯｾﾝ	1	[3SV] INC.5,6
5	NO PART NO.	#	LEVER,THIRD	ﾚﾊﾞｰ	1	[3SV]
6	214A7-42071		BUSHING	ﾌﾞｯｼﾝｸﾞ	2	[3SV]
7	23457-42041		SHAFT,3&4SV-LEVER	ｼｬﾌﾄ	1	[3SV]
-	529F3-70411		SHAFT,3&4SV-LEVER	ｼｬﾌﾄ	1	[3SV/FC]
8	23657-42131		COLLAR	ｶﾗｰ	1	[3SV]
9	01183-06012		BOLT	ﾎﾞﾙﾄ	1	[3SV]
10	214A7-42171		JOINT	ｼﾞｮｲﾝﾄ	3	[3SV]
11	22717-40061		PIN,CLEVIS	ﾋﾟﾝ	6	[3SV]
12	02000-00005		WASHER	ﾜｯｼｬ	6	[3SV]
13	22517-40051		SHIM,T-0.2	ｼﾑ	6	[3SV]
14	216G7-42011		BRACKET,VALVE-LEVER	ﾌﾞﾗｹｯﾄ	1	[3SV]
15	216H3-92281		BOLT	ﾎﾞﾙﾄ	4	[3SV]
16	02200-16010		PIN,COTTER	ﾋﾟﾝ	6	[3SV]

FIG.202 VALVE CONTROL [4SV]

(F50273C0) ﾊﾞﾙﾌﾞｺﾝﾄﾛｰﾙ

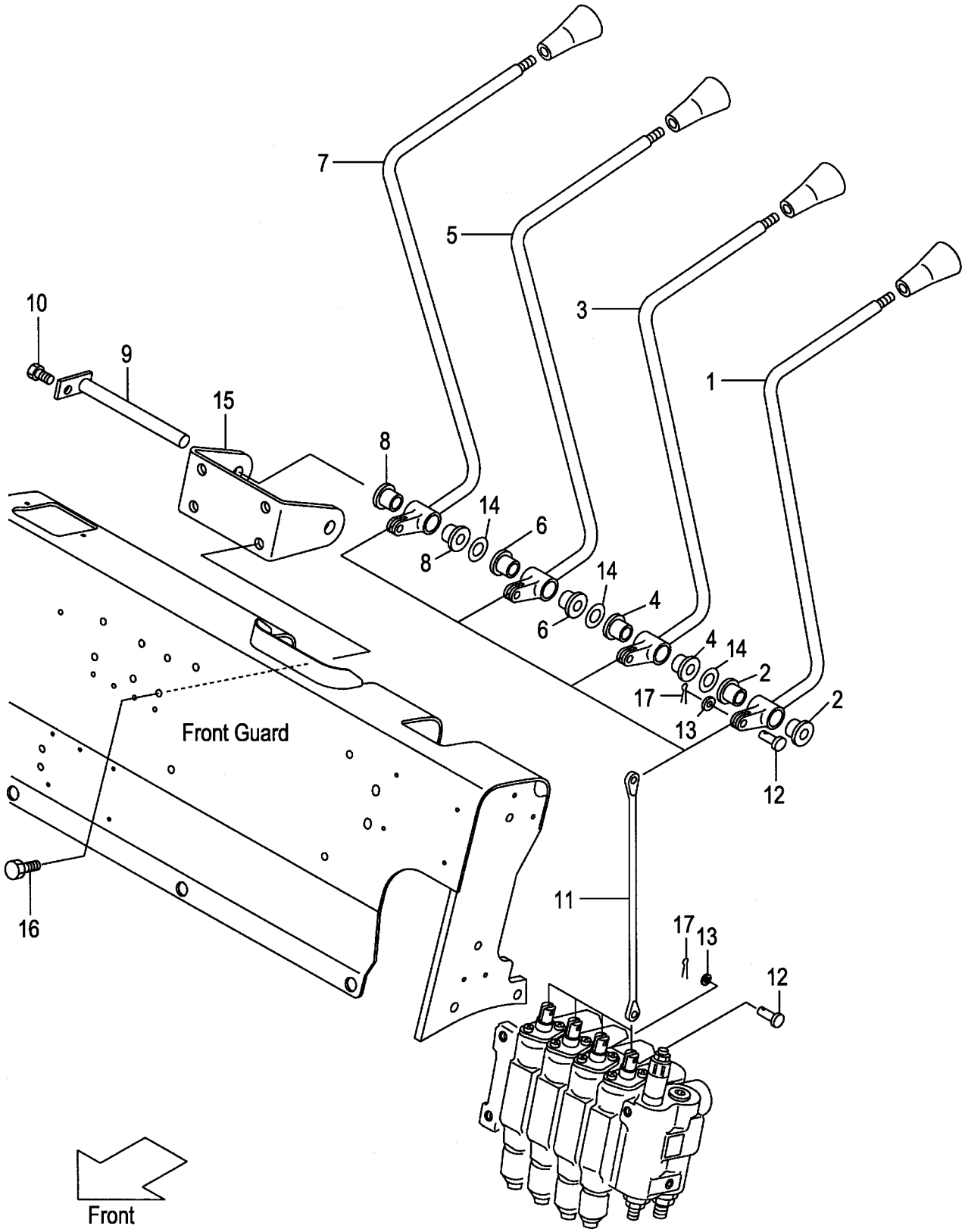

A:FG20C17 FG20T17 FG25C17 FG25T17 C:FD20C17 FD20T17 FD25C17 FD25T17
B:FG20C6 FG20T6 FG25C6 FG25T6 FG20W6 FG25W6 D:FD20C6 FD20T6 FD25C6 FD25T6 FD20W6 FD25W6

Item No	Part No.	Mark	Description		Req'd	Remarks : Serial No.
A1	216G7-40012		LEVER-ASSY,LIFT	ﾘﾌﾄﾚﾊﾞｰｱｯｾﾝ	1	[4SV] INC.1,2
1	NO PART NO.	#	LEVER,LIFT	ﾚﾊﾞｰ	1	[4SV]
2	214A7-42071		BUSHING	ﾌﾞｯｼﾝｸﾞ	2	[4SV]
A2	216G7-40022		LEVER-ASSY,TILT	ﾃｨﾙﾄﾚﾊﾞｰｱｯｾﾝ	1	[4SV] INC.3,4
3	NO PART NO.	#	LEVER,TILT	ﾚﾊﾞｰ	1	[4SV]
4	214A7-42071		BUSHING	ﾌﾞｯｼﾝｸﾞ	2	[4SV]
A3	216G7-40032		LEVER-ASSY,THIRD	ﾚﾊﾞｰｱｯｾﾝ	1	[4SV] INC.5,6
5	NO PART NO.	#	LEVER,THIRD	ﾚﾊﾞｰ	1	[4SV]
6	214A7-42071		BUSHING	ﾌﾞｯｼﾝｸﾞ	2	[4SV]
A4	216G7-40042		LEVER-ASSY,FOURTH	ﾚﾊﾞｰｱｯｾﾝ	1	[4SV] INC.7,8
7	NO PART NO.	#	LEVER,FOURTH	ﾚﾊﾞｰ	1	[4SV]
8	214A7-42071		BUSHING	ﾌﾞｯｼﾝｸﾞ	2	[4SV]
9	23457-42041		SHAFT,3&4SV-LEVER	ｼｬﾌﾄ	1	[4SV]
-	529F3-70411		SHAFT,3&4SV-LEVER	ｼｬﾌﾄ	1	[4SV/FC]
10	01183-06012		BOLT	ﾎﾞﾙﾄ	1	[4SV]
11	214A7-42171		JOINT	ｼﾞｮｲﾝﾄ	4	[4SV]
12	22717-40061		PIN,CLEVIS	ﾋﾟﾝ	8	[4SV]
13	02000-00005		WASHER	ﾜｯｼｬ	8	[4SV]
14	22517-40051		SHIM,T-0.2	ｼﾑ	9	[4SV]
15	216G7-42011		BRACKET,VALVE-LEVER	ﾌﾞﾗｹｯﾄ	1	[4SV]
16	216H3-92281		BOLT	ﾎﾞﾙﾄ	4	[4SV]
17	02200-16010		PIN,COTTER	ﾋﾟﾝ	8	[4SV]

FIG.203 VALVE CONTROL [5SV]

(F50273D0) ﾊﾞﾙﾌﾞｺﾝﾄﾛｰﾙ

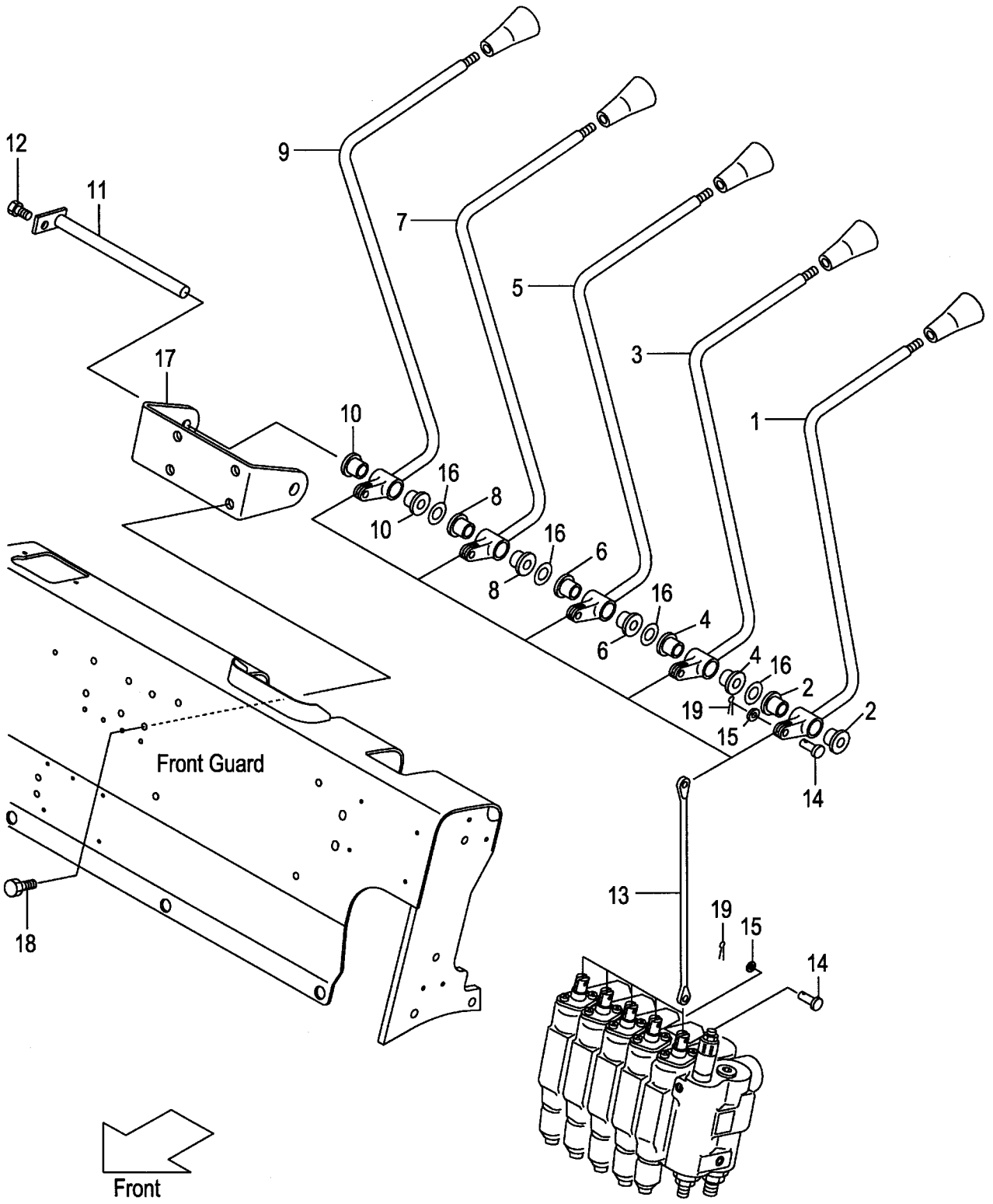

A:FG20C17 FG20T17 FG25C17 FG25T17 C:FD20C17 FD20T17 FD25C17 FD25T17
B:FG20C6 FG20T6 FG25C6 FG25T6 FG20W6 FG25W6 D:FD20C6 FD20T6 FD25C6 FD25T6 FD20W6 FD25W6

Item No	Part No.	Mark	Description		Req'd	Remarks : Serial No.
A1	216G7-40012		LEVER-ASSY,LIFT	ﾘﾌﾄﾚﾊﾞｰｱｯｾﾝ	1	[5SV] INC.1,2
1	NO PART NO.	#	LEVER,LIFT	ﾚﾊﾞｰ	1	[5SV]
2	214A7-42071		BUSHING	ﾌﾞｯｼﾝｸﾞ	2	[5SV]
A2	216G7-40022		LEVER-ASSY,TILT	ﾃｨﾙﾄﾚﾊﾞｰｱｯｾﾝ	1	[5SV] INC.3,4
3	NO PART NO.	#	LEVER,TILT	ﾚﾊﾞｰ	1	[5SV]
4	214A7-42071		BUSHING	ﾌﾞｯｼﾝｸﾞ	2	[5SV]
A3	216G7-40032		LEVER-ASSY,THIRD	ﾚﾊﾞｰｱｯｾﾝ	1	[5SV] INC.5,6
5	NO PART NO.	#	LEVER,THIRD	ﾚﾊﾞｰ	1	[5SV]
6	214A7-42071		BUSHING	ﾌﾞｯｼﾝｸﾞ	2	[5SV]
A4	216G7-40042		LEVER-ASSY,FOURTH	ﾚﾊﾞｰｱｯｾﾝ	1	[5SV] INC.7,8
7	NO PART NO.	#	LEVER,FOURTH	ﾚﾊﾞｰ	1	[5SV]
8	214A7-42071		BUSHING	ﾌﾞｯｼﾝｸﾞ	2	[5SV]
A5	234A7-40052		LEVER-ASSY,FIFTH	ﾚﾊﾞｰｱｯｾﾝ	1	[5SV] INC.9,10
9	NO PART NO.	#	LEVER,FIFTH	ﾚﾊﾞｰ	1	[5SV]
10	214A7-42071		BUSHING	ﾌﾞｯｼﾝｸﾞ	2	[5SV]
11	55593-02371		SHAFT,5SV-LEVER	ｼｬﾌﾄ	1	[5SV]
-	529F3-70421		SHAFT,5SV-LEVER	ｼｬﾌﾄ	1	[5SV/FC]
12	01183-06012		BOLT	ﾎﾞﾙﾄ	1	[5SV]
13	214A7-42171		JOINT	ｼﾞｮｲﾝﾄ	5	[5SV]
14	22717-40061		PIN,CLEVIS	ﾋﾟﾝ	10	[5SV]
15	02000-00005		WASHER	ﾜｯｼｬ	10	[5SV]
16	22517-40051		SHIM,T-0.2	ｼﾑ	12	[5SV]
17	234A7-42011		BRACKET,VALVE-LEVER	ﾌﾞﾗｹｯﾄ	1	[5SV]
18	216H3-92281		BOLT	ﾎﾞﾙﾄ	4	[5SV]
19	02200-16010		PIN,COTTER	ﾋﾟﾝ	10	[5SV]

FIG.204 VALVE CONTROL KNOB

(F50273E0) ﾊﾞﾙﾌﾞｺﾝﾄﾛｰﾙﾉﾌﾞ

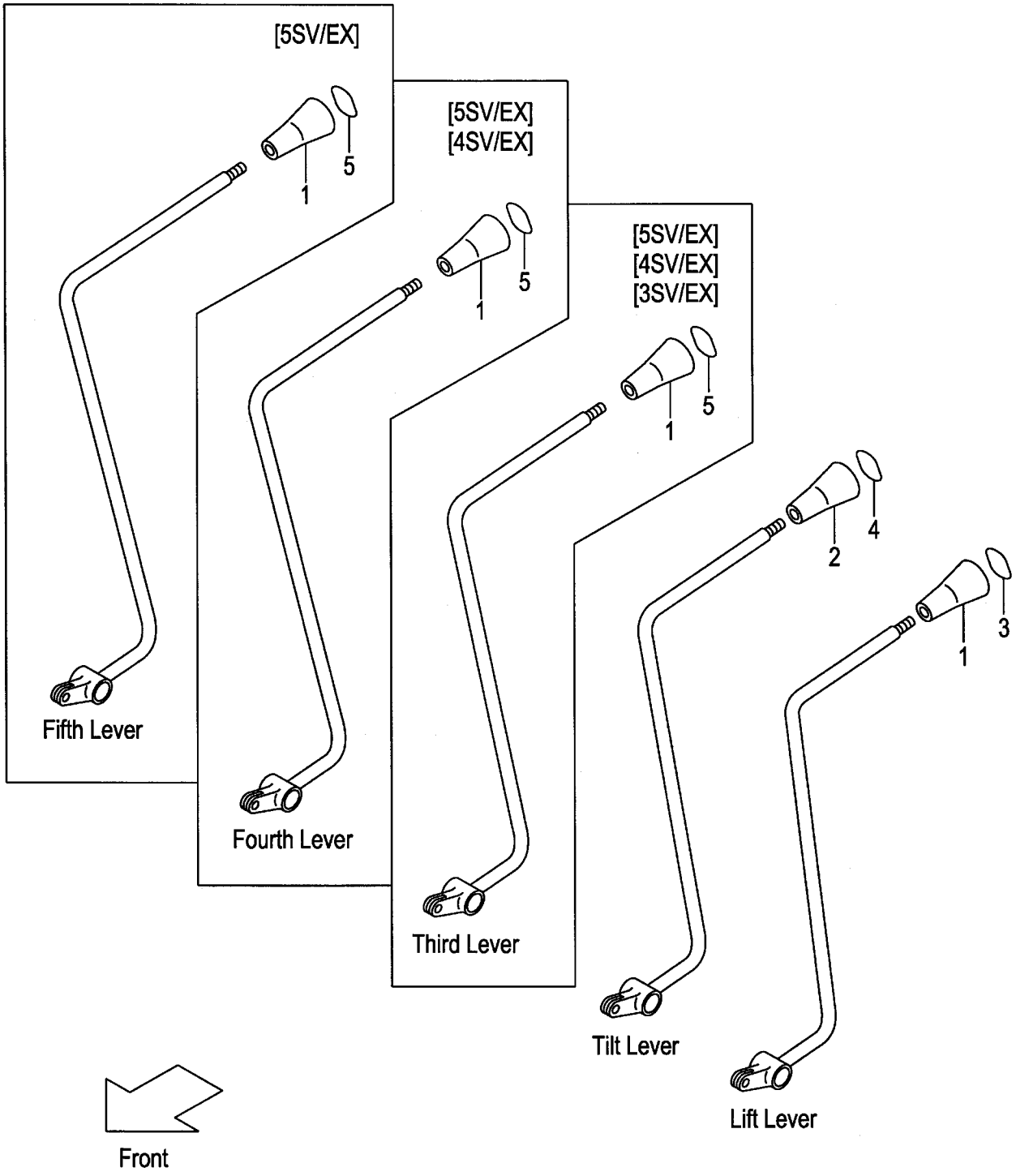

A:FG20C17 FG20T17 FG25C17 FG25T17 D:FD20C17 FD20T17 FD25C17 FD25T17
B:FG20C6 FG20T6 FG25C6 FG25T6 E:FD20C6 FD20T6 FD25C6 FD25T6
C:FG20W6 FG25W6 F:FD20W6 FD25W6

FIG.204
(F50273E0)

Item No	Part No.	Mark	Description	Req'd	Remarks : Serial No.
1	214A7-42181		KNOB,VALVE-LEVER ﾉﾌﾞ	1	
-	214A7-42181		KNOB,VALVE-LEVER ﾉﾌﾞ	2	B,E [3SV/EX]
-	214A7-42181		KNOB,VALVE-LEVER ﾉﾌﾞ	3	B,E [4SV/EX]
-	214A7-42181		KNOB,VALVE-LEVER ﾉﾌﾞ	4	B,E [5SV/EX]
2	281E7-42101		KNOB,VALVE-LEVER ﾉﾌﾞ	1	
3	214A7-42191		DECAL,SYMBOL,LIFT ﾃﾞｶﾙ	1	
4	214A7-42201		DECAL,SYMBOL,TILT ﾃﾞｶﾙ	1	
5	514A2-72411		DECAL,SYMBOL,SPACE ﾃﾞｶﾙ	1	B,E [3SV/EX]
-	514A2-72411		DECAL,SYMBOL,SPACE ﾃﾞｶﾙ	2	B,E [4SV/EX]
-	514A2-72411		DECAL,SYMBOL,SPACE ﾃﾞｶﾙ	3	B,E [5SV/EX]

HYDRAULIC LINE (MAIN)(1/3)
FIG.205 (GASOLINE:CLUTCH & TOR-CON)

(F5027610) ﾊｲﾄﾞﾛﾘｯｸﾗｲﾝ(ﾒｲﾝ)(1/3)

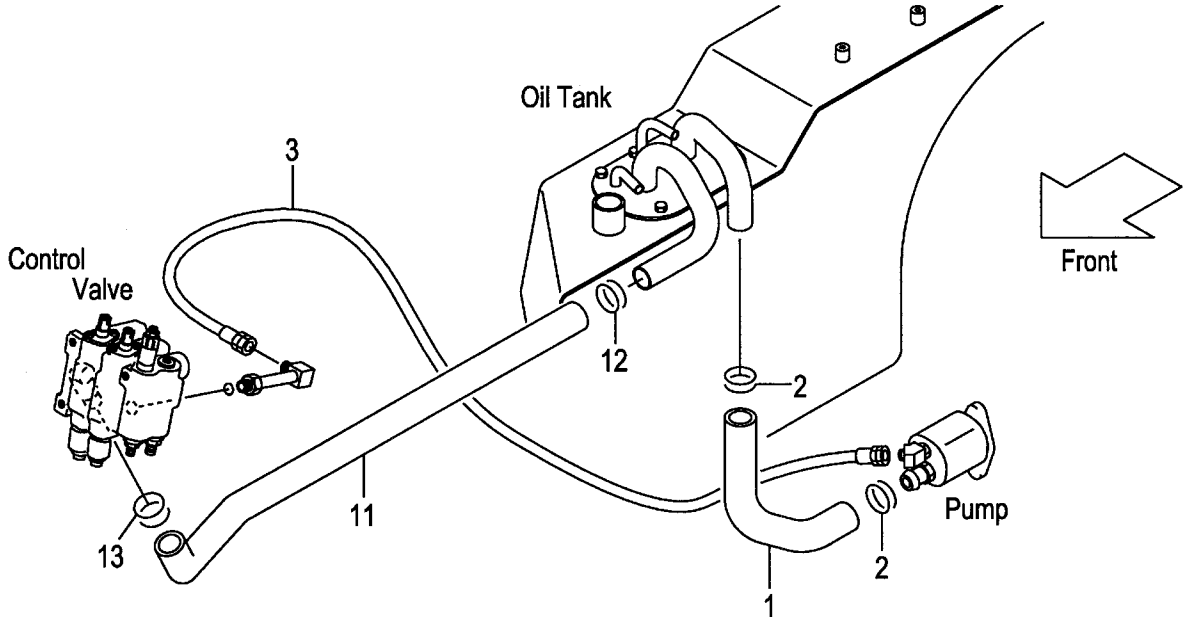

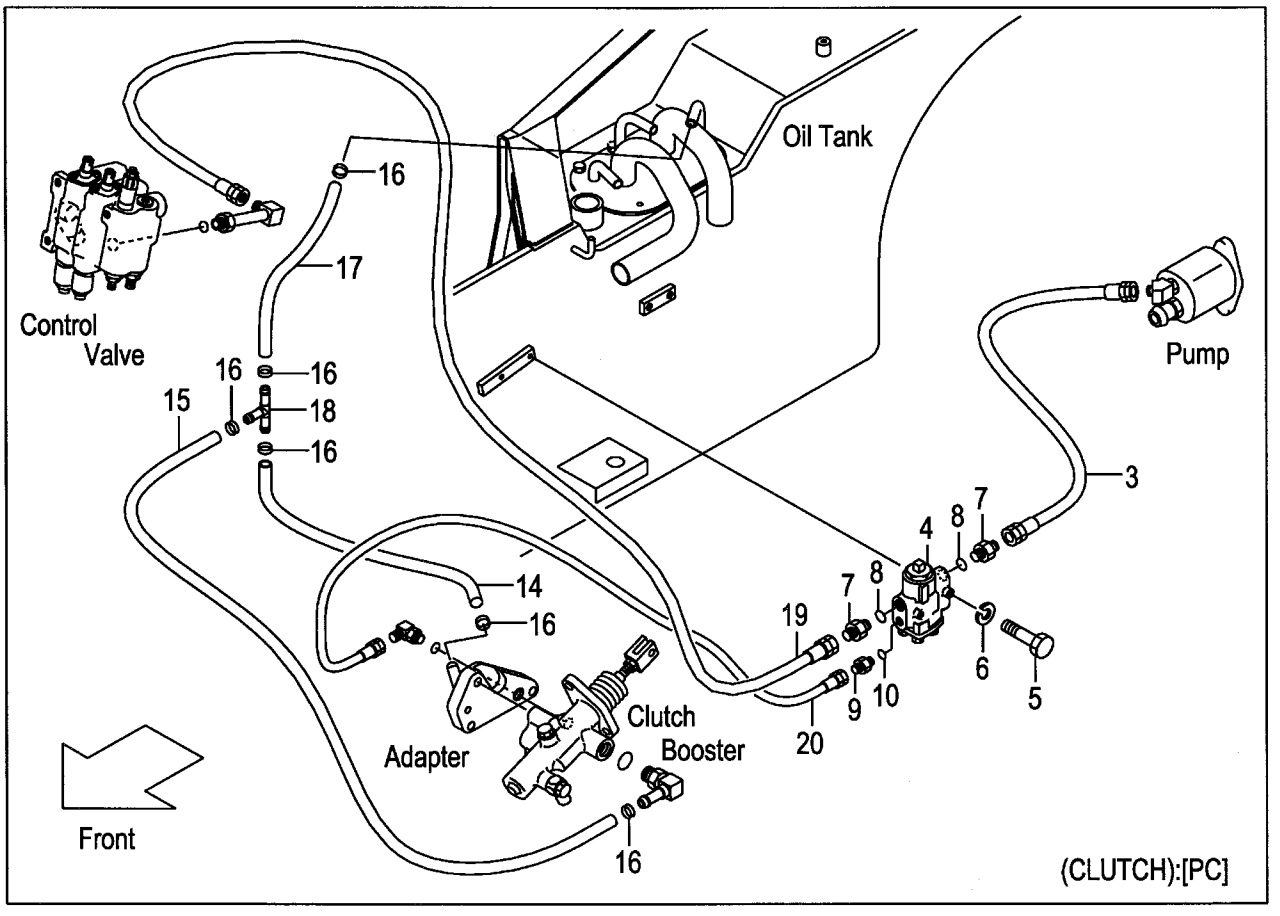

A:FG20C17 FG25C17 C:FG20C6 FG25C6
B:FG20T17 FG25T17 D:FG20T6 FG25T6

Item No	Part No.	Mark	Description		Req'd	Remarks : Serial No.
1	218G7-62111		HOSE,SUCTION	ﾎｰｽ	1	
2	04911-00046		CLIP	ｸﾘｯﾌﾟ	2	
3	04691-04108		HOSE	ﾎｰｽ	1	
-	04691-04048		HOSE	ﾎｰｽ	1	A,C [PC]
4	234H7-60301		VALVE,FLOW-PRIORITY	ﾊﾞﾙﾌﾞ	1	A,C [PC]
5	01100-06055		BOLT	ﾎﾞﾙﾄ	2	A,C [PC]
6	02010-00006		WASHER	ﾜｯｼｬ	2	A,C [PC]
A1	04134-20404		NIPPLE-ASSY	ﾆｯﾌﾟﾙｱｯｾﾝ	2	A,C [PC] INC.7,8
7	NO PART NO.	#	NIPPLE	ﾆｯﾌﾟﾙ	2	A,C [PC]
8	03320-00180		O-RING	Oﾘﾝｸﾞ	2	A,C [PC]
A2	23657-60311		NIPPLE-ASSY	ﾆｯﾌﾟﾙｱｯｾﾝ	1	A,C [PC] INC.9,10
9	NO PART NO.	#	NIPPLE	ﾆｯﾌﾟﾙ	1	A,C [PC]
10	03320-00140		O-RING	Oﾘﾝｸﾞ	1	A,C [PC]
11	234A7-62101		HOSE,RETURN	ﾎｰｽ	1	
-	234A7-62201		HOSE,RETURN	ﾎｰｽ	1	[4SV][5SV]
12	04911-00044		CLIP	ｸﾘｯﾌﾟ	1	
13	04911-00040		CLIP	ｸﾘｯﾌﾟ	1	
14	04710-04102		HOSE	ﾎｰｽ	1	A,C [PC]
15	04710-04121		HOSE	ﾎｰｽ	1	A,C [PC]
16	04911-00021		CLIP	ｸﾘｯﾌﾟ	6	A,C [PC]
17	04710-04030		HOSE	ﾎｰｽ	1	A,C [PC]
18	53675-55051		THREE-WAY	ｽﾘｰｳｴｲ	1	A,C [PC]
19	04691-04048		HOSE	ﾎｰｽ	1	A,C [PC]
20	04691-02065		HOSE	ﾎｰｽ	1	A,C [PC]

HYDRAULIC LINE (MAIN)(1/3)
FIG.206 (DIESEL:CLUTCH & TOR-CON)

(F5027620) ﾊｲﾄﾞﾛﾘｯｸﾗｲﾝ(ﾒｲﾝ)(1/3)

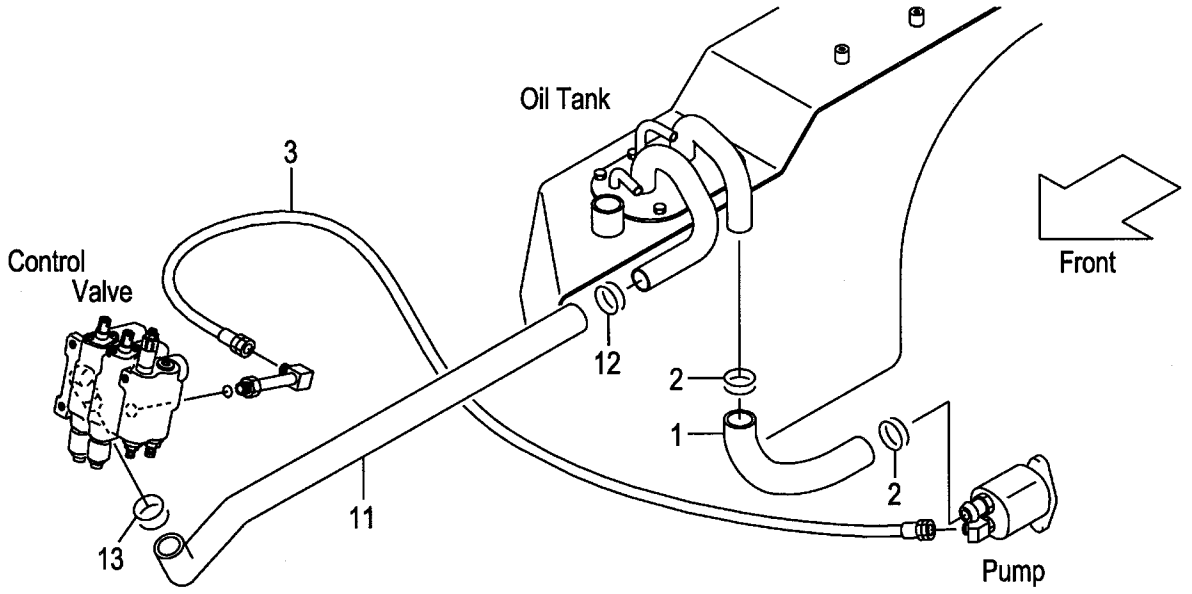

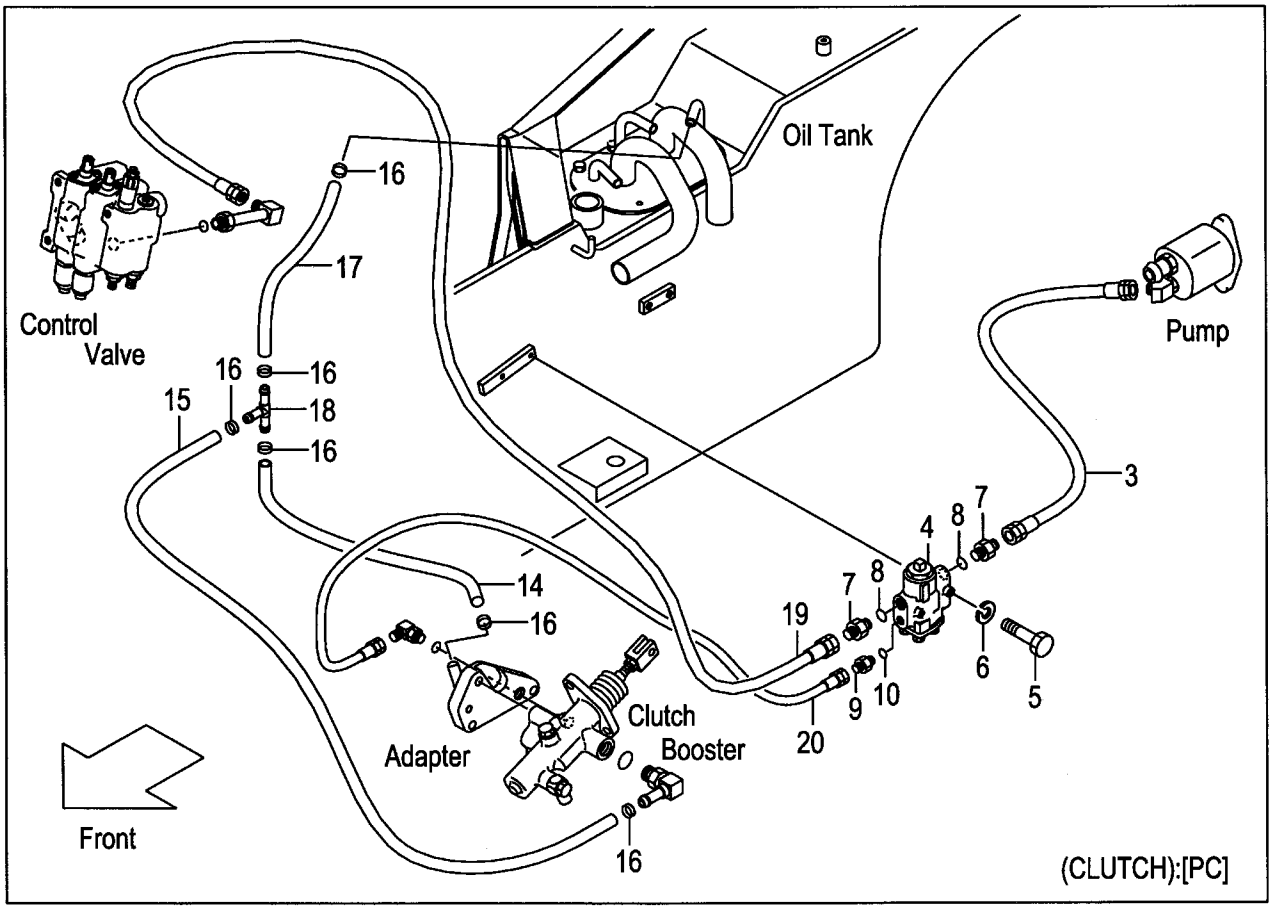

A:FD20C6 FD25C6
B:FD20T6 FD25T6

FIG.206
(F5027620)

Item No	Part No.	Mark	Description		Req'd	Remarks : Serial No.
1	219M7-62011		HOSE,SUCTION	ﾎｰｽ	1	
2	04911-00046		CLIP	ｸﾘｯﾌﾟ	2	
3	04691-04108		HOSE	ﾎｰｽ	1	
-	04691-04048		HOSE	ﾎｰｽ	1	A [PC]
4	234H7-60301		VALVE,FLOW-PRIORITY	ﾊﾞﾙﾌﾞ	1	A [PC]
5	01100-06055		BOLT	ﾎﾞﾙﾄ	2	A [PC]
6	02010-00006		WASHER	ﾜｯｼｬ	2	A [PC]
A1	04134-20404		NIPPLE-ASSY	ﾆｯﾌﾟﾙｱｯｾﾝ	2	A [PC] INC.7,8
7	NO PART NO.	#	NIPPLE	ﾆｯﾌﾟﾙ	2	A [PC]
8	03320-00180		O-RING	Oﾘﾝｸﾞ	2	A [PC]
A2	23657-60311		NIPPLE-ASSY	ﾆｯﾌﾟﾙｱｯｾﾝ	1	A [PC] INC.9,10
9	NO PART NO.	#	NIPPLE	ﾆｯﾌﾟﾙ	1	A [PC]
10	03320-00140		O-RING	Oﾘﾝｸﾞ	1	A [PC]
11	234A7-62101		HOSE,RETURN	ﾎｰｽ	1	
-	234A7-62201		HOSE,RETURN	ﾎｰｽ	1	[4SV][5SV]
12	04911-00044		CLIP	ｸﾘｯﾌﾟ	1	
13	04911-00040		CLIP	ｸﾘｯﾌﾟ	1	
14	04710-04102		HOSE	ﾎｰｽ	1	A [PC]
15	04710-04121		HOSE	ﾎｰｽ	1	A [PC]
16	04911-00021		CLIP	ｸﾘｯﾌﾟ	6	A [PC]
17	04710-04030		HOSE	ﾎｰｽ	1	A [PC]
18	53675-55051		THREE-WAY	ｽﾘｰｳｴｲ	1	A [PC]
19	04691-04048		HOSE	ﾎｰｽ	1	A [PC]
20	04691-02065		HOSE	ﾎｰｽ	1	A [PC]

FIG.207 HYDRAULIC LINE (MAIN)(1/3)(DIESEL)

(F5027630) ﾊｲﾄﾞﾛﾘｯｸﾗｲﾝ(ﾒｲﾝ)(1/3)

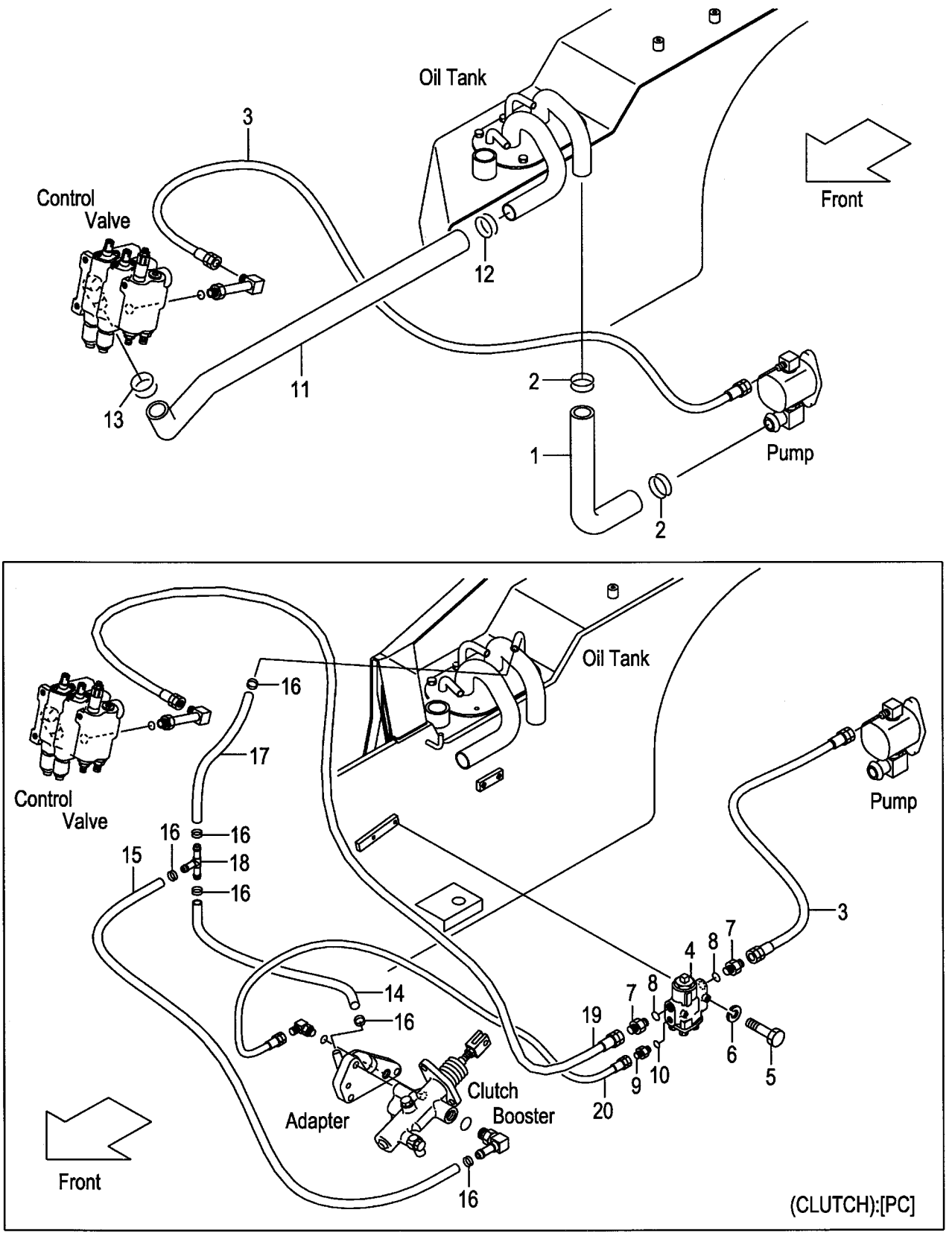

A:FD20C17 FD25C17
B:FD20T17 FD25T17

Item No	Part No.	Mark	Description		Req'd	Remarks : Serial No.
1	219G7-62001		HOSE,SUCTION	ﾎｰｽ	1	
2	04911-00046		CLIP	ｸﾘｯﾌﾟ	2	
3	04691-04108		HOSE	ﾎｰｽ	1	
-	04691-04048		HOSE	ﾎｰｽ	1	A [PC]
4	234H7-60301		VALVE,FLOW-PRIORITY	ﾊﾞﾙﾌﾞ	1	A [PC]
5	01100-06055		BOLT	ﾎﾞﾙﾄ	2	A [PC]
6	02010-00006		WASHER	ﾜｯｼｬ	2	A [PC]
A1	04134-20404		NIPPLE-ASSY	ﾆｯﾌﾟﾙｱｯｾﾝ	2	A [PC] INC.7,8
7	NO PART NO.	#	NIPPLE	ﾆｯﾌﾟﾙ	2	A [PC]
8	03320-00180		O-RING	Oﾘﾝｸﾞ	2	A [PC]
A2	23657-60311		NIPPLE-ASSY	ﾆｯﾌﾟﾙｱｯｾﾝ	1	A [PC] INC.9,10
9	NO PART NO.	#	NIPPLE	ﾆｯﾌﾟﾙ	1	A [PC]
10	03320-00140		O-RING	Oﾘﾝｸﾞ	1	A [PC]
11	234A7-62101		HOSE,RETURN	ﾎｰｽ	1	
-	234A7-62201		HOSE,RETURN	ﾎｰｽ	1	[4SV][5SV]
12	04911-00044		CLIP	ｸﾘｯﾌﾟ	1	
13	04911-00040		CLIP	ｸﾘｯﾌﾟ	1	
14	04710-04102		HOSE	ﾎｰｽ	1	A [PC]
15	04710-04121		HOSE	ﾎｰｽ	1	A [PC]
16	04911-00021		CLIP	ｸﾘｯﾌﾟ	6	A [PC]
17	04710-04030		HOSE	ﾎｰｽ	1	A [PC]
18	53675-55051		THREE-WAY	ｽﾘｰｳｴｲ	1	A [PC]
19	04691-04048		HOSE	ﾎｰｽ	1	A [PC]
20	04691-02065		HOSE	ﾎｰｽ	1	A [PC]

FIG.208 HYDRAULIC LINE (MAIN)(1/3)(GASOLINE:OIL CLUTCH)

(F5027640) ﾊｲﾄﾞﾛﾘｯｸﾗｲﾝ(ﾒｲﾝ)(1/3)

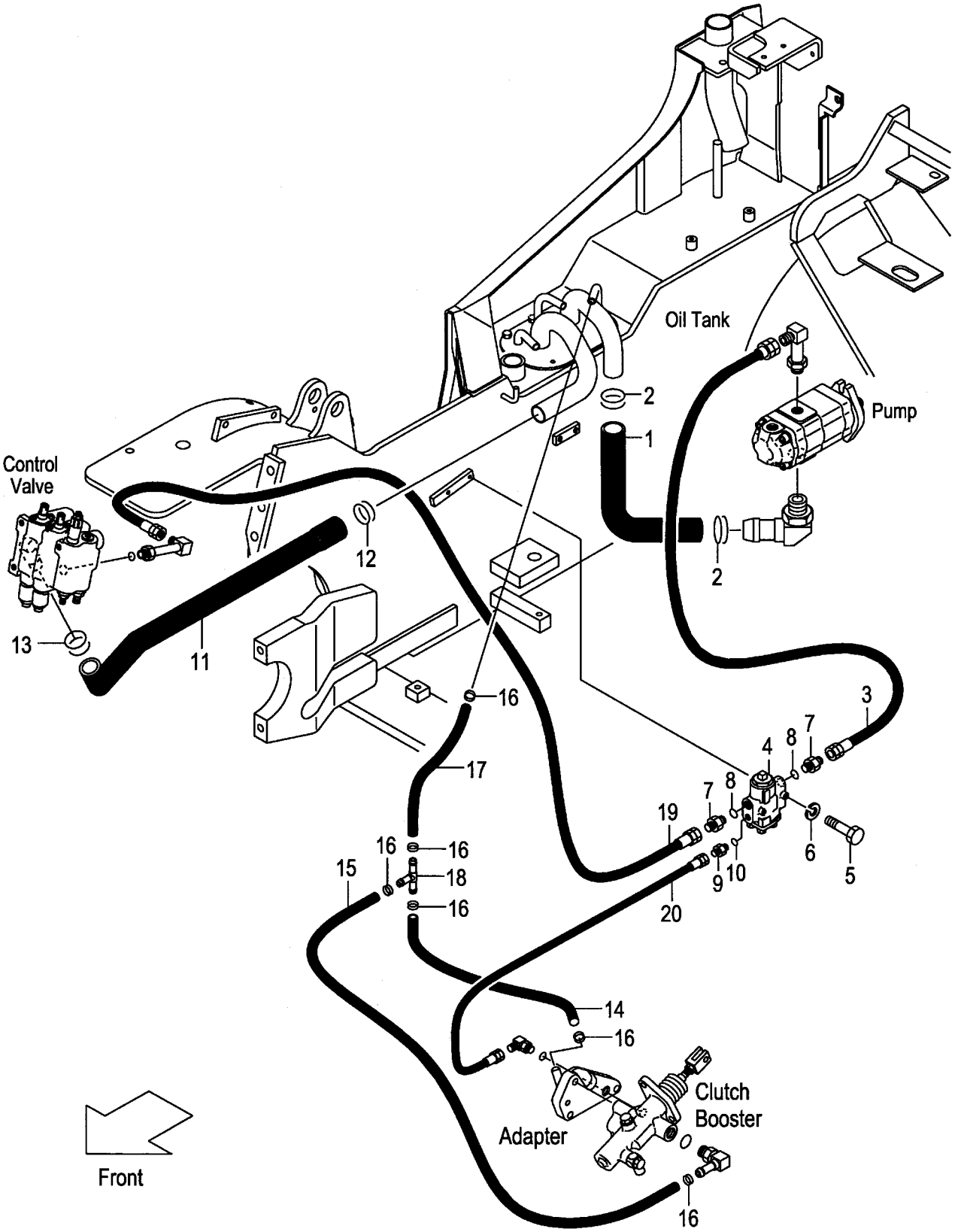

A:FG20W6 FG25W6

Item No	Part No.	Mark	Description		Req'd	Remarks : Serial No.
1	233H7-62001		HOSE,SUCTION	ﾎｰｽ	1	
2	04911-00046		CLIP	ｸﾘｯﾌﾟ	2	
3	04691-04048		HOSE	ﾎｰｽ	1	
4	234H7-60301		VALVE,FLOW-PRIORITY	ﾊﾞﾙﾌﾞ	1	
5	01100-06055		BOLT	ﾎﾞﾙﾄ	2	
6	02010-00006		WASHER	ﾜｯｼｬ	2	
A1	04134-20404		NIPPLE-ASSY	ﾆｯﾌﾟﾙｱｯｾﾝ	2	INC.7,8
7	NO PART NO.	#	NIPPLE	ﾆｯﾌﾟﾙ	2	
8	03320-00180		O-RING	Oﾘﾝｸﾞ	2	
A2	23657-60311		NIPPLE-ASSY	ﾆｯﾌﾟﾙｱｯｾﾝ	1	INC.9,10
9	NO PART NO.	#	NIPPLE	ﾆｯﾌﾟﾙ	1	
10	03320-00140		O-RING	Oﾘﾝｸﾞ	1	
11	234A7-62101		HOSE,RETURN	ﾎｰｽ	1	
-	234A7-62201		HOSE,RETURN	ﾎｰｽ	1	[4SV][5SV]
12	04911-00044		CLIP	ｸﾘｯﾌﾟ	1	
13	04911-00040		CLIP	ｸﾘｯﾌﾟ	1	
14	04710-04102		HOSE	ﾎｰｽ	1	
15	04710-04121		HOSE	ﾎｰｽ	1	
16	04911-00021		CLIP	ｸﾘｯﾌﾟ	6	
17	04710-04030		HOSE	ﾎｰｽ	1	
18	53675-55051		THREE-WAY	ｽﾘｰｳｴｲ	1	
19	04691-04048		HOSE	ﾎｰｽ	1	
20	04691-02065		HOSE	ﾎｰｽ	1	

FIG.209 HYDRAULIC LINE (MAIN)(1/3)(DIESEL:OIL CLUTCH)

(F5027650) ﾊｲﾄﾞﾛﾘｯｸﾗｲﾝ(ﾒｲﾝ)(1/3)

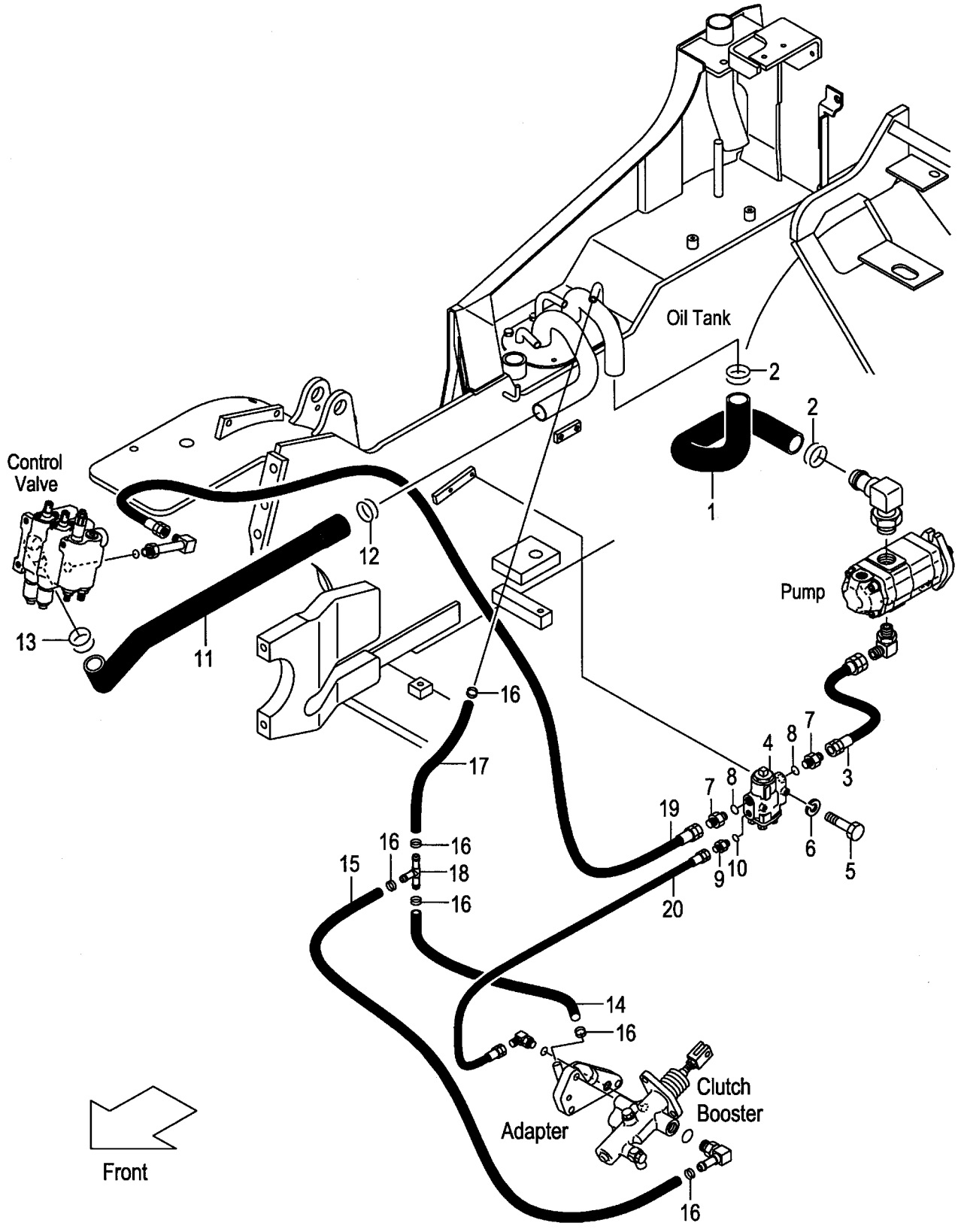

A:FD20W6 FD25W6

Item No	Part No.	Mark	Description		Req'd	Remarks : Serial No.
1	232N7-62001		HOSE,SUCTION	ホース	1	
2	04911-00046		CLIP	クリップ゜	2	
3	04691-04048		HOSE	ホース	1	
4	234H7-60301		VALVE,FLOW-PRIORITY	バ゛ルブ゜	1	
5	01100-06055		BOLT	ボ゛ルト	2	
6	02010-00006		WASHER	ワッシャ	2	
A1	04134-20404		NIPPLE-ASSY	ニップ゜ルアッセン	2	INC.7,8
7	NO PART NO.	#	NIPPLE	ニップ゜ル	2	
8	03320-00180		O-RING	Oリング゛	2	
A2	23657-60311		NIPPLE-ASSY	ニップ゜ルアッセン	1	INC.9,10
9	NO PART NO.	#	NIPPLE	ニップ゜ル	1	
10	03320-00140		O-RING	Oリング゛	1	
11	234A7-62101		HOSE,RETURN	ホース	1	
-	234A7-62201		HOSE,RETURN	ホース	1	[4SV][5SV]
12	04911-00044		CLIP	クリップ゜	1	
13	04911-00040		CLIP	クリップ゜	1	
14	04710-04102		HOSE	ホース	1	
15	04710-04121		HOSE	ホース	1	
16	04911-00021		CLIP	クリップ゜	6	
17	04710-04030		HOSE	ホース	1	
18	53675-55051		THREE-WAY	スリーウエイ	1	
19	04691-04048		HOSE	ホース	1	
20	04691-02065		HOSE	ホース	1	

FIG.210 HYDRAULIC LINE (MAIN)(2/3)

(F5027660) ﾊｲﾄﾞﾛﾘｯｸﾗｲﾝ(ﾒｲﾝ)(2/3)

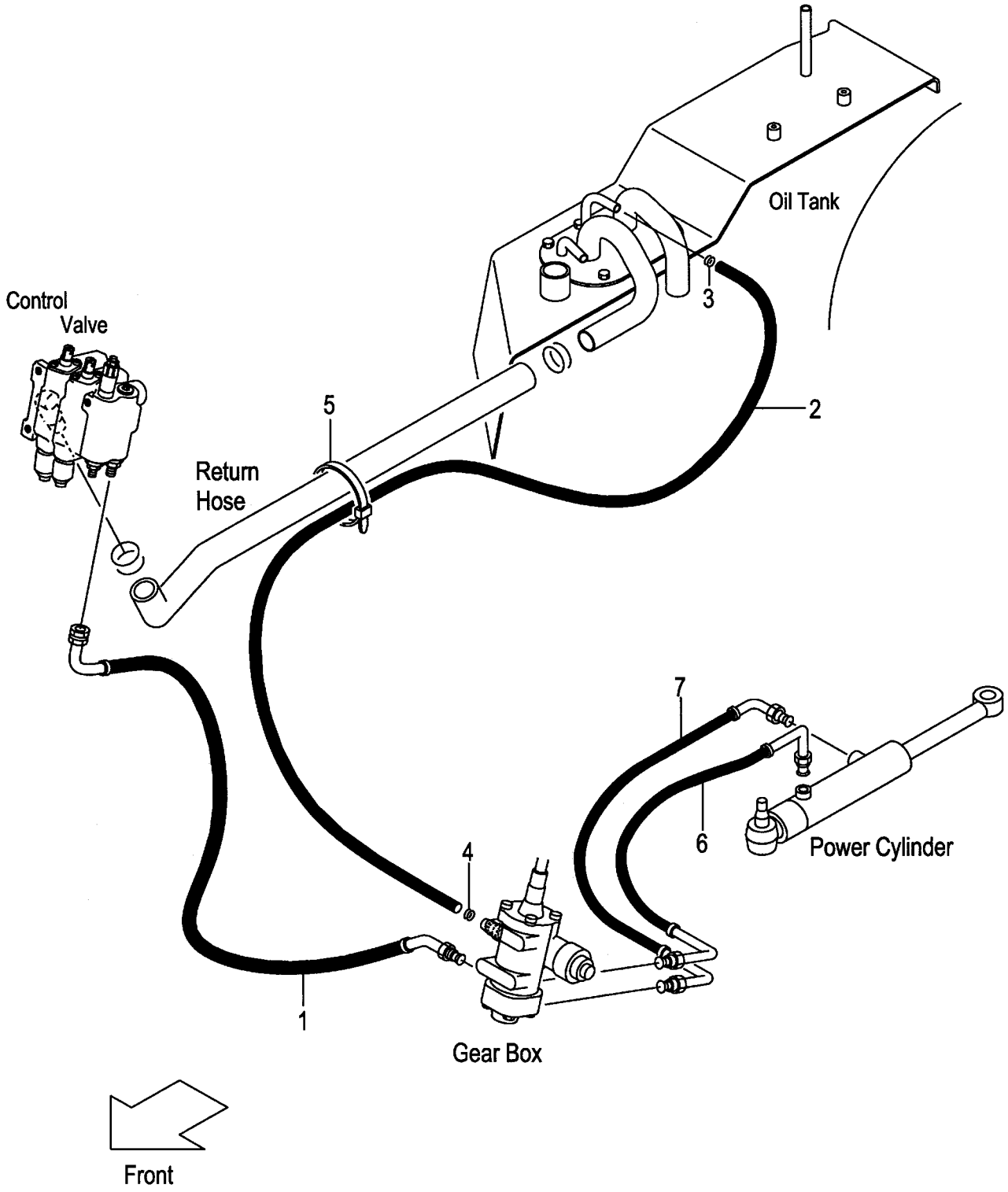

A:FG20C17 FG25C17 D:FG20T6 FG25T6 G:FD20T17 FD25T17 K:FD20W6 FD25W6
B:FG20T17 FG25T17 E:FG20W6 FG25W6 H:FD20C6 FD25C6
C:FG20C6 FG25C6 F:FD20C17 FD25C17 J:FD20T6 FD25T6

FIG.210
(F5027660)

Item No	Part No.	Mark	Description		Req'd	Remarks : Serial No.
1	214A7-62131		HOSE	ﾎｰｽ	1	
2	04710-04140		HOSE	ﾎｰｽ	1	
3	04911-00021		CLIP	ｸﾘｯﾌﾟ	1	
4	04911-00020		CLIP	ｸﾘｯﾌﾟ	1	
5	27042-42312		BAND,CABLE	ﾊﾞﾝﾄﾞ	2	
6	239A7-60301		HOSE,PS,FRONT	ﾎｰｽ	1	A,B,C,D,F,G,H,J
-	239H7-60401		HOSE,PS,FRONT	ﾎｰｽ	1	E,K
-	239H7-60401		HOSE,PS,FRONT	ﾎｰｽ	1	A,C,F,H
						[PC]
7	239A7-60311		HOSE,PS,REAR	ﾎｰｽ	1	

HYDRAULIC LINE (MAIN)(2/3)
[EXC][EXE][EXK][EXN][OBT]

FIG.211 (F50276A0)

ﾊｲﾄﾞﾛﾘｯｸﾗｲﾝ(ﾒｲﾝ)(2/3)

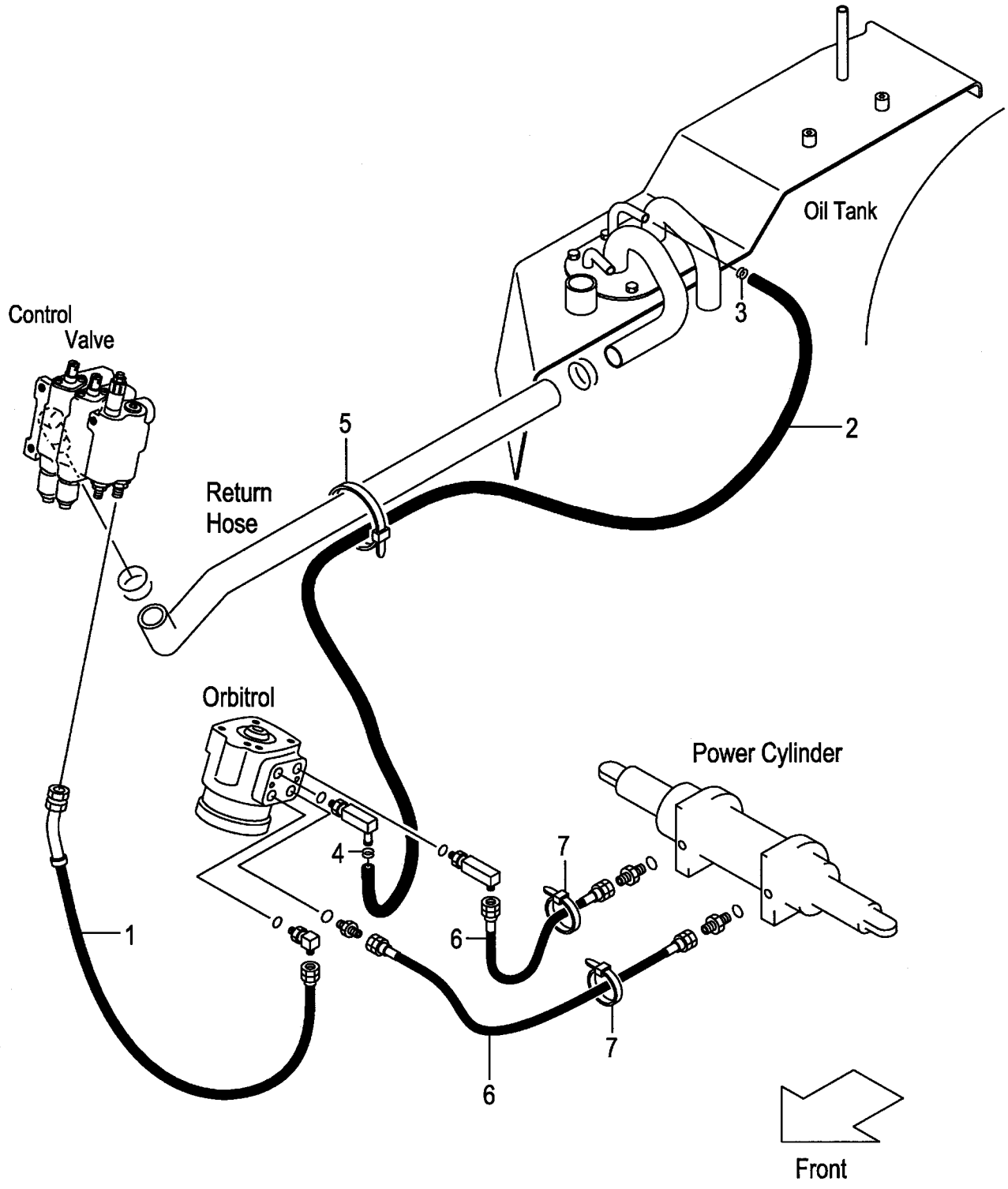

A:FG20C6 FG25C6 C:FD20C6 FD25C6
B:FG20T6 FG25T6 D:FD20T6 FD25T6

Item No	Part No.	Mark	Description		Req'd	Remarks : Serial No.
1	215E7-62091		HOSE	ﾎｰｽ	1	[EXC][EXE][EXK][EXN][OBT] [EXB/OBT]
2	04710-04165		HOSE	ﾎｰｽ	1	[EXC][EXE][EXK][EXN][OBT] [EXB/OBT]
3	04911-00021		CLIP	ｸﾘｯﾌﾟ	1	[EXC][EXE][EXK][EXN][OBT] [EXB/OBT]
4	04911-00020		CLIP	ｸﾘｯﾌﾟ	1	[EXC][EXE][EXK][EXN][OBT] [EXB/OBT]
5	27042-42312		BAND,CABLE	ﾊﾞﾝﾄﾞ	2	[EXC][EXE][EXK][EXN][OBT] [EXB/OBT]
6	514A2-42512		HOSE,PS	ﾎｰｽ	2	[EXC][EXE][EXK][EXN][OBT] [EXB/OBT]
7	04913-11380		BAND,INSHULOCK	ﾊﾞﾝﾄﾞ	2	[EXC][EXE][EXK][EXN][OBT] [EXB/OBT]

FIG.212 HYDRAULIC LINE (MAIN)(2/3)[(EXC,EXE,EXK,EXN)/PSS]

(F50276B0) ﾊｲﾄﾞﾛﾘｯｸﾗｲﾝ(ﾒｲﾝ)(2/3)

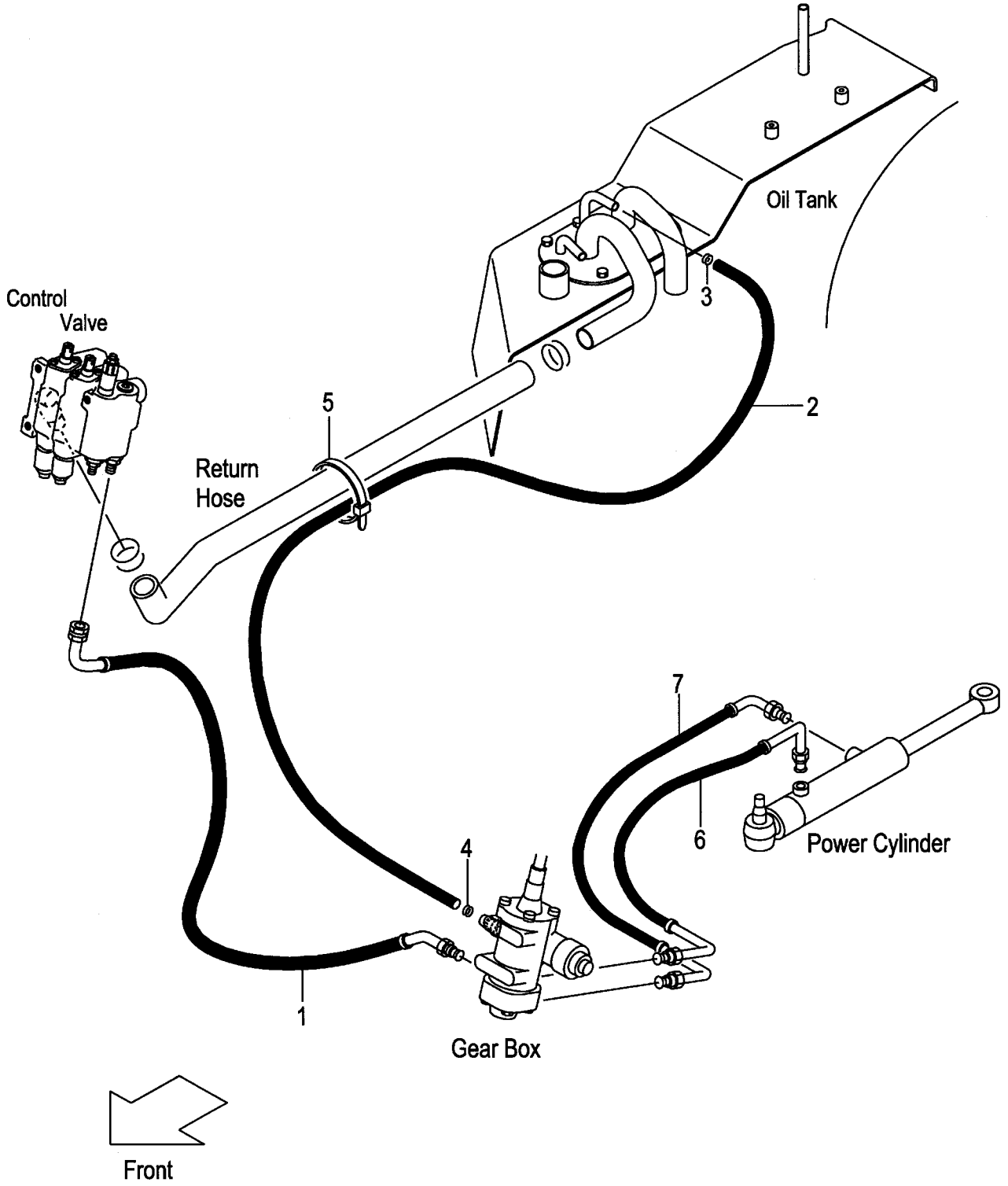

A:FG20C6 FG25C6 C:FD20C6 FD25C6
B:FG20T6 FG25T6 D:FD20T6 FD25T6

Item No	Part No.	Mark	Description		Req'd	Remarks : Serial No.
1	214A7-62131		HOSE	ﾎｰｽ	1	[EXC/PSS][EXE/PSS][EXK/PSS] [EXN/PSS]
2	04710-04140		HOSE	ﾎｰｽ	1	[EXC/PSS][EXE/PSS][EXK/PSS] [EXN/PSS]
3	04911-00021		CLIP	ｸﾘｯﾌﾟ	1	[EXC/PSS][EXE/PSS][EXK/PSS] [EXN/PSS]
4	04911-00020		CLIP	ｸﾘｯﾌﾟ	1	[EXC/PSS][EXE/PSS][EXK/PSS] [EXN/PSS]
5	27042-42312		BAND,CABLE	ﾊﾞﾝﾄﾞ	2	[EXC/PSS][EXE/PSS][EXK/PSS] [EXN/PSS]
6	239A7-60301		HOSE,PS,FRONT	ﾎｰｽ	1	[EXC/PSS][EXE/PSS][EXK/PSS] [EXN/PSS]
-	239H7-60401		HOSE,PS,FRONT	ﾎｰｽ	1	A,C [EXC/PSS/PC][EXE/PSS/PC] [EXK/PSS/PC][EXN/PSS/PC]
7	239A7-60311		HOSE,PS,REAR	ﾎｰｽ	1	[EXC/PSS][EXE/PSS][EXK/PSS] [EXN/PSS]

FIG.213 HYDRAULIC LINE (MAIN)(3/3)

(F5027670) ﾊｲﾄﾞﾛﾘｯｸﾗｲﾝ(ﾒｲﾝ)(3/3)

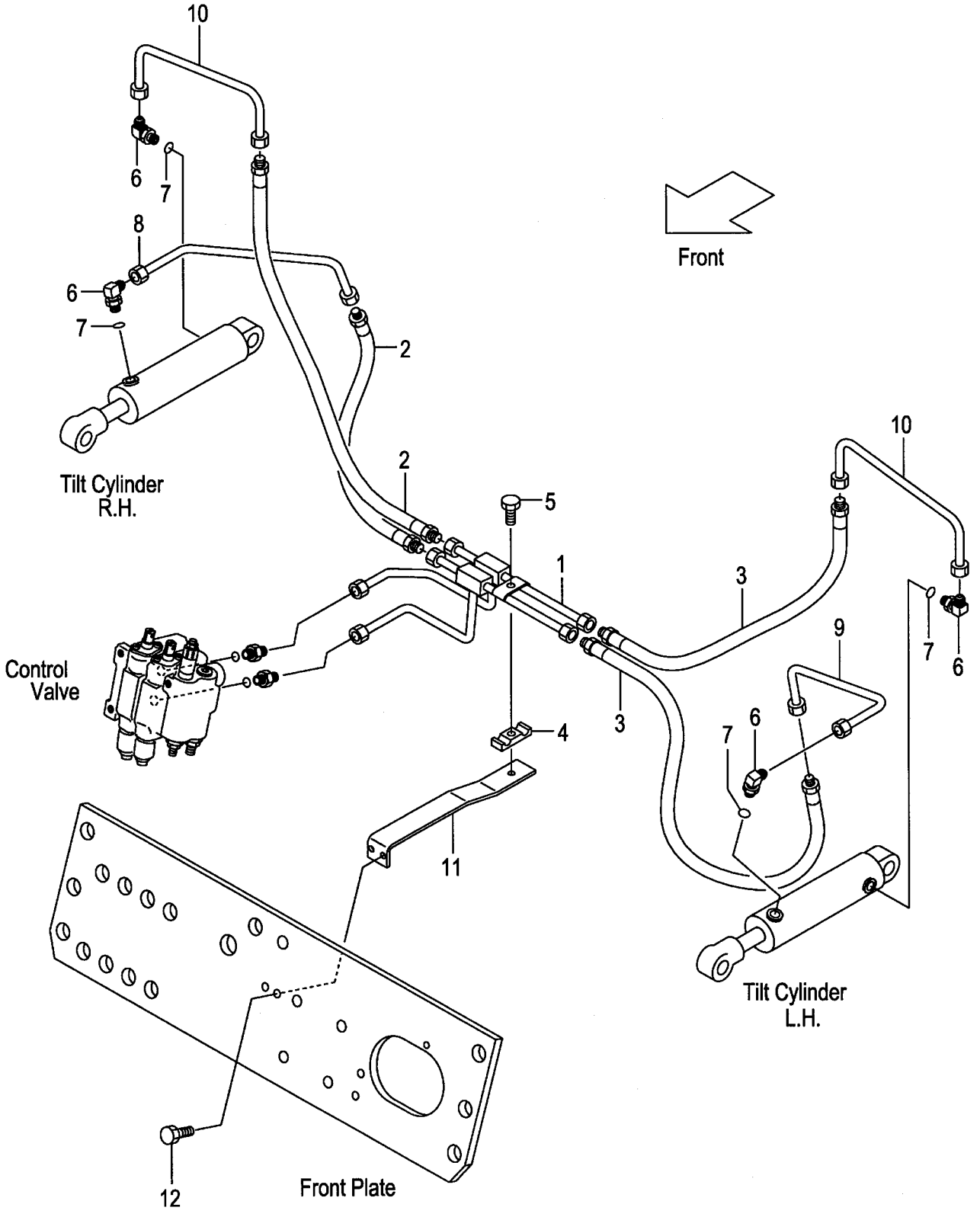

A:FG20C17 FG20T17 FG25C17 FG25T17 C:FD20C17 FD20T17 FD25C17 FD25T17
B:FG20C6 FG20T6 FG25C6 FG25T6 FG20W6 FG25W6 D:FD20C6 FD20T6 FD25C6 FD25T6 FD20W6 FD25W6

Item No	Part No.	Mark	Description		Req'd	Remarks : Serial No.
1	239A7-62111		PIPE,TILT	ﾊﾟｲﾌﾟ	1	A:1-11039 B:1-65958 C:1-11015 D:1-84994
-	239A7-62112		PIPE,TILT	ﾊﾟｲﾌﾟ	1	A:11040- B:65959- C:11016- D:84995-
2	239A7-62251		HOSE,TILT,RH	ﾎｰｽ	2	
3	239A7-62261		HOSE,TILT,LH	ﾎｰｽ	2	
4	239A7-62351		RUBBER,TILT-PIPE	ﾗﾊﾞｰ	1	
5	01183-08025		BOLT	ﾎﾞﾙﾄ	1	
A1	277H7-60501		ELBOW-ASSY	ｴﾙﾎﾞｱｯｾﾝ	4	INC.6,7
6	NO PART NO.	#	ELBOW	ｴﾙﾎﾞ	4	
7	03320-00110		O-RING	Oﾘﾝｸﾞ	4	
8	239A7-62211		PIPE,RH,TILT-FRONT	ﾊﾟｲﾌﾟ	1	
9	239A7-62121		PIPE,LH,TILT-FRONT	ﾊﾟｲﾌﾟ	1	
10	239A7-62131		PIPE,TILT-REAR	ﾊﾟｲﾌﾟ	2	
11	239A7-62401		BRACKET,TILT-PIPE	ﾌﾞﾗｹｯﾄ	1	
12	01183-08020		BOLT	ﾎﾞﾙﾄ	2	

FIG.214 HYDRAULIC LINE (TOR-CON)(GASOLINE)

(F5027680) ﾊｲﾄﾞﾛﾘｯｸﾗｲﾝ(ﾄﾙｺﾝ)

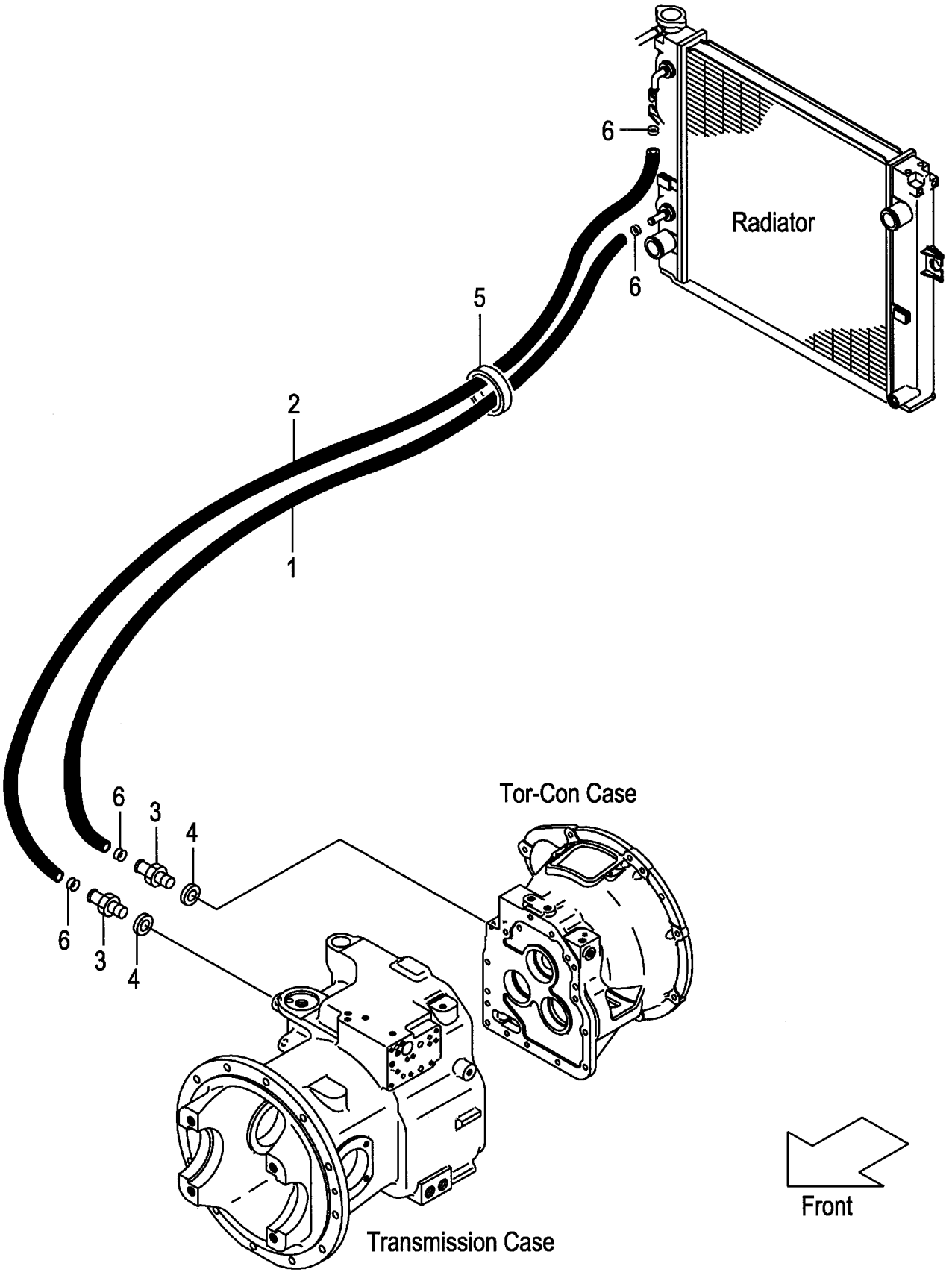

A:FG20T17 FG25T17
B:FG20T6 FG25T6

FIG.214
(F5027680)

Item No	Part No.	Mark	Description	Req'd	Remarks : Serial No.
1	228U7-62201		HOSE,OIL-COOLER ホース	1	
2	228U7-62211		HOSE,OIL-COOLER ホース	1	
3	228U7-62221		NIPPLE ニップル	2	
4	20802-51301		PACKING パッキング	2	
-	23467-82041		PACKING パッキング	2	(NO CONTROL NO.)
5	04913-20380		BAND バンド	1	
6	25787-82081		CLIP クリップ	4	

FIG.215 HYDRAULIC LINE (TOR-CON)(DIESEL)

(F5027690) ﾊｲﾄﾞﾛﾘｯｸﾗｲﾝ(ﾄﾙｺﾝ)

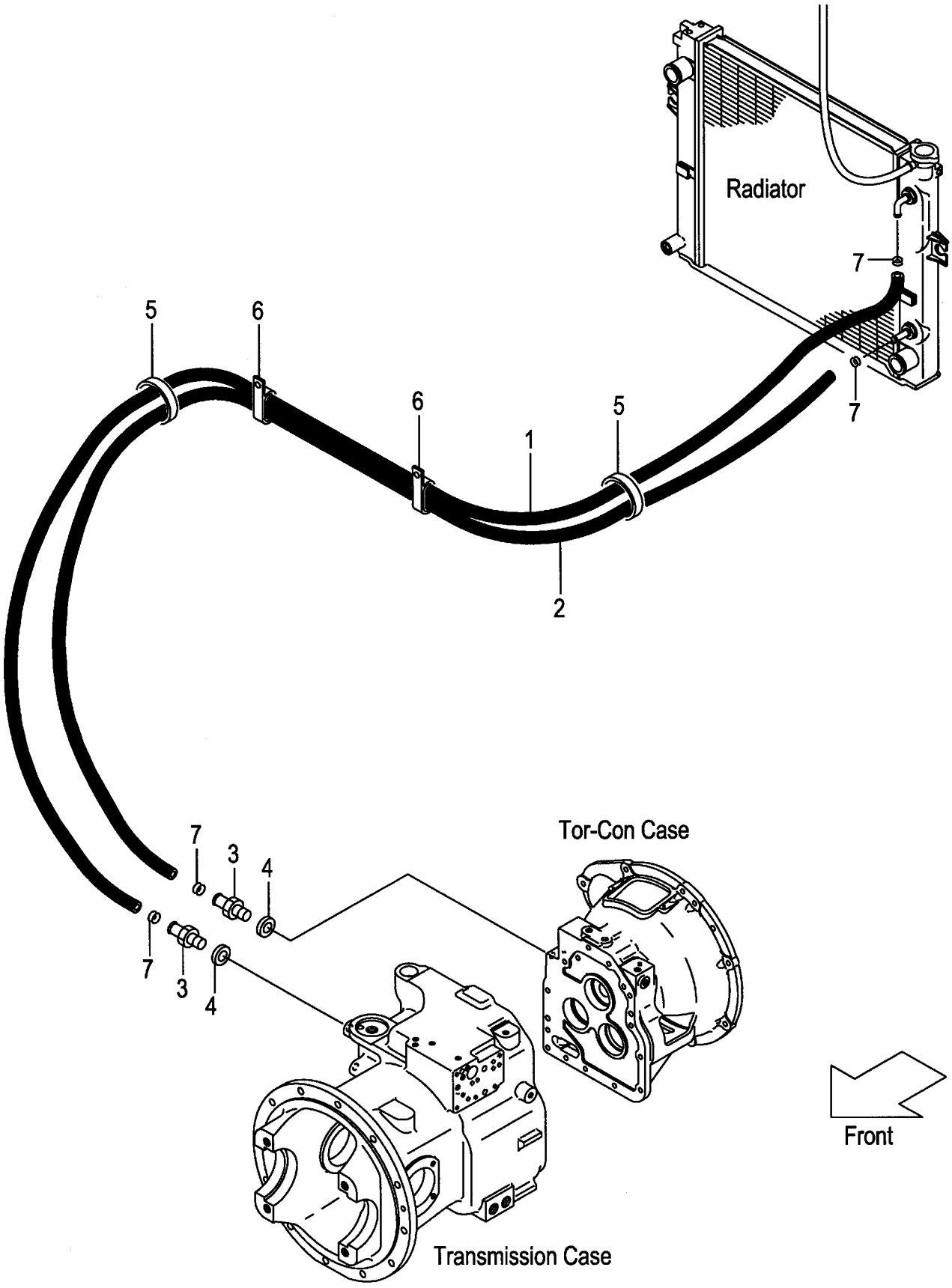

FIG.215
(F5027690)

A:FD20T17 FD25T17
B:FD20T6 FD25T6

Item No	Part No.	Mark	Description		Req'd	Remarks : Serial No.
1	234B7-82101		HOSE,OIL-COOLER	ﾎｰｽ	1	
2	234B7-82111		HOSE,OIL-COOLER	ﾎｰｽ	1	
3	228U7-62221		NIPPLE	ﾆｯﾌﾟﾙ	2	
4	20802-51301		PACKING	ﾊﾟｯｷﾝｸﾞ	2	
-	23467-82041		PACKING	ﾊﾟｯｷﾝｸﾞ	2	(NO CONTROL NO.)
5	04913-20380		BAND	ﾊﾞﾝﾄﾞ	2	
6	25957-62201		CLIP	ｸﾘｯﾌﾟ	2	A:1-11024 B:1-86339
-	209P7-62531		CLIP	ｸﾘｯﾌﾟ	2	A:11025- B:86340-
7	25787-82081		CLIP	ｸﾘｯﾌﾟ	4	

FIG.216 HYDRAULIC LINE (OIL CLUTCH)(GASOLINE)

(F50276C0) ハイドロリックライン(オイルクラッチ)

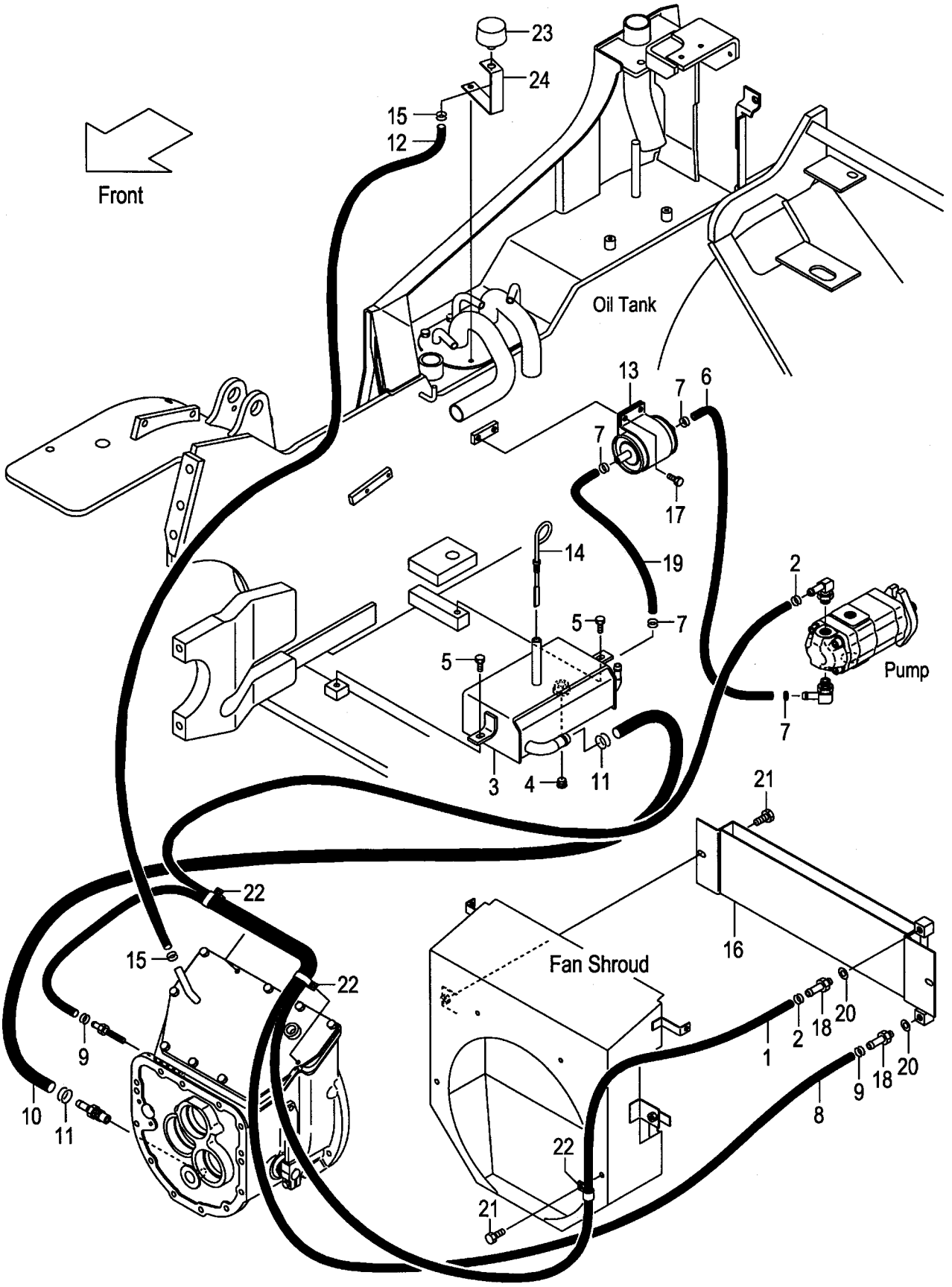

A:FG20W6 FG25W6

Item No	Part No.	Mark	Description		Req'd	Remarks : Serial No.
1	239H7-82001		HOSE,OIL-COOLER	ホース	1	
2	229G7-82051		CLIP,HOSE	クリップ゜	2	
3	234H7-60104		TANK,OIL	タンク	1	
4	04000-00300		PLUG	プ゜ラグ゛	1	
5	01183-08020		BOLT	ボ゛ルト	2	
6	04710-04060		HOSE	ホース	1	
7	04911-00021		CLIP	クリップ゜	4	
8	229G7-82011		HOSE,OIL-COOLER	ホース	1	
9	229G7-82051		CLIP,HOSE	クリップ゜	2	
10	234H7-62291		HOSE	ホース	1	
11	04911-00032		CLIP	クリップ゜	2	
12	04710-04040		HOSE	ホース	1	
13	234H7-62171		FILTER	フイルタ	1	
14	27717-52081		GAUGE,OIL-LEVEL	ゲ゛ージ゛	1	
15	04914-00019		CLIP	クリップ゜	2	
16	217W2-10001		COOLER,OIL	クーラ	1	
17	01185-08016		BOLT	ボ゛ルト	2	
18	229G7-82101		NIPPLE	ニップ゜ル	2	
19	04710-04050		HOSE	ホース	1	
20	23467-82041		PACKING	パ゜ッキング゛	2	
21	01186-10016		BOLT	ボ゛ルト	3	
22	25957-62201		CLIP	クリップ゜	3	
23	216G7-52201		CAP,BREATHER	キャップ゜	1	
24	216G7-52121		BRACKET,AIR-BREATHER	ブ゛ラケット	1	

FIG.217 HYDRAULIC LINE (OIL CLUTCH)(DIESEL)

(F50276D0) ハイドロリックライン(オイルクラッチ)

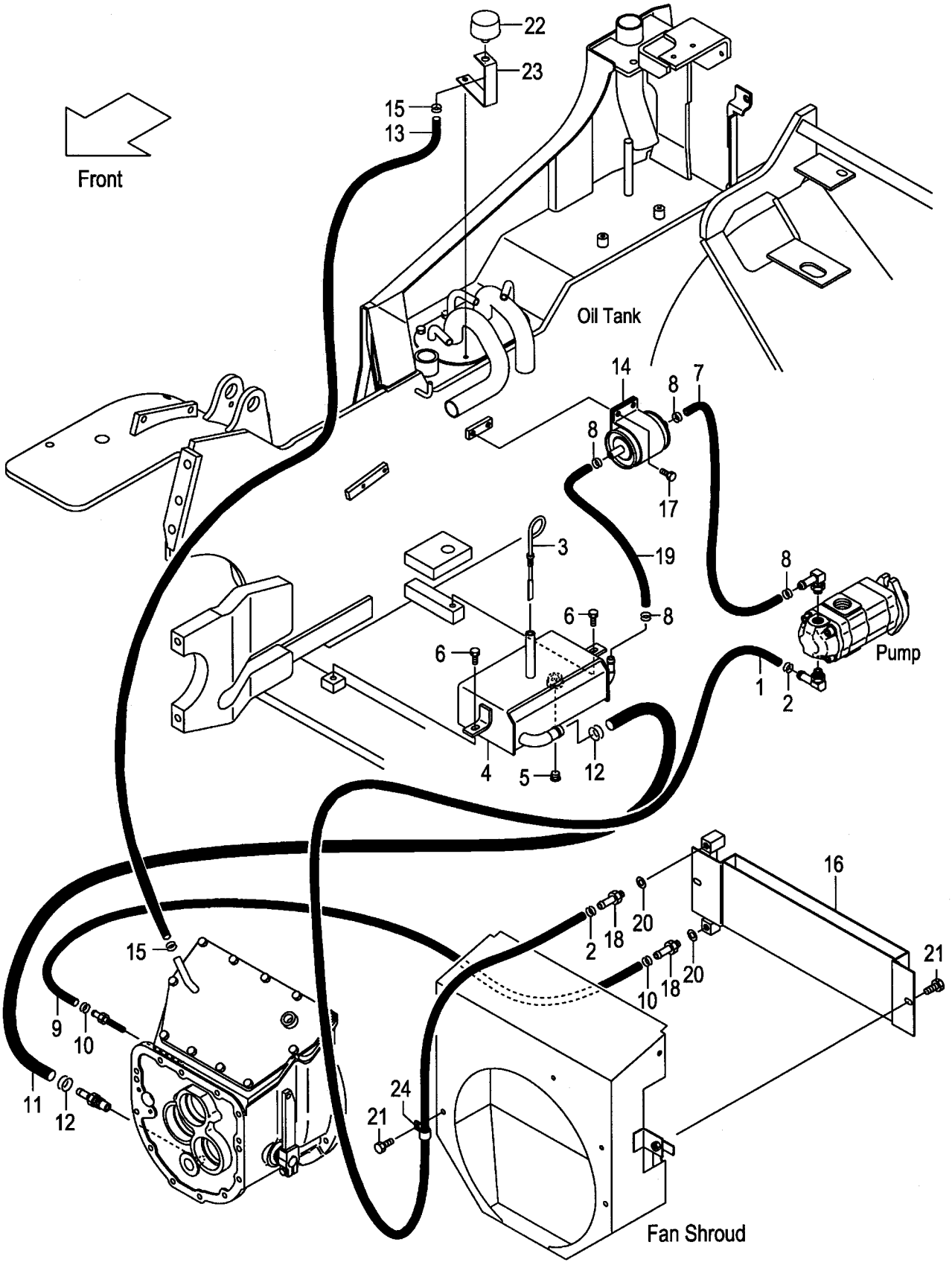

A:FD20W6 FD25W6

Item No	Part No.	Mark	Description		Req'd	Remarks : Serial No.
1	233H7-62051		HOSE,OIL-COOLER	ﾎｰｽ	1	
2	229G7-82051		CLIP,HOSE	ｸﾘｯﾌﾟ	2	
3	27717-52081		GAUGE,OIL-LEVEL	ｹﾞｰｼﾞ	1	
4	234H7-60104		TANK,OIL	ﾀﾝｸ	1	
5	04000-00300		PLUG	ﾌﾟﾗｸﾞ	1	
6	01183-08020		BOLT	ﾎﾞﾙﾄ	2	
7	232N7-62051		HOSE	ﾎｰｽ	1	
8	04911-00021		CLIP	ｸﾘｯﾌﾟ	4	
9	216H7-82001		HOSE,OIL-COOLER	ﾎｰｽ	1	
10	229G7-82051		CLIP,HOSE	ｸﾘｯﾌﾟ	2	
11	234H7-62291		HOSE	ﾎｰｽ	1	
12	04911-00032		CLIP	ｸﾘｯﾌﾟ	2	
13	04710-04040		HOSE	ﾎｰｽ	1	
14	234H7-62171		FILTER	ﾌｲﾙﾀ	1	
15	04914-00019		CLIP	ｸﾘｯﾌﾟ	2	
16	217W2-10001		COOLER,OIL	ｸｰﾗ	1	
17	01185-08016		BOLT	ﾎﾞﾙﾄ	2	
18	229G7-82101		NIPPLE	ﾆｯﾌﾟﾙ	2	
19	04710-04050		HOSE	ﾎｰｽ	1	
20	23467-82041		PACKING	ﾊﾟｯｷﾝｸﾞ	2	
21	01186-10016		BOLT	ﾎﾞﾙﾄ	3	
22	216G7-52201		CAP,BREATHER	ｷｬｯﾌﾟ	1	
23	216G7-52121		BRACKET,AIR-BREATHER	ﾌﾞﾗｹｯﾄ	1	
24	25957-62201		CLIP	ｸﾘｯﾌﾟ	1	

FIG.218 TILT CYLINDER

(F5028510) ﾃｨﾙﾄｼﾘﾝﾀﾞ

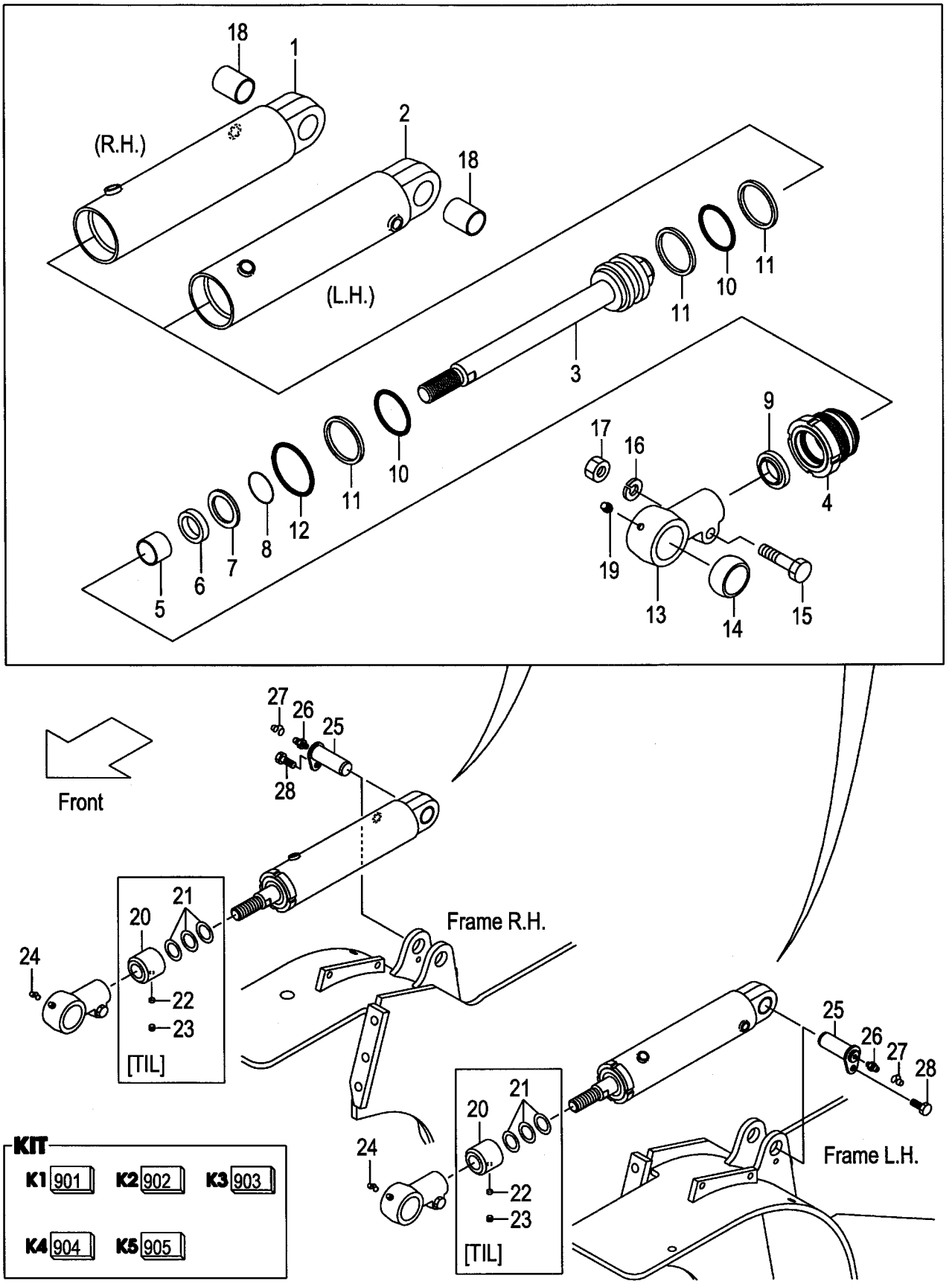

A:FG20C17 FG20T17 FG25C17 FG25T17 C:FD20C17 FD20T17 FD25C17 FD25T17
B:FG20C6 FG20T6 FG25C6 FG25T6 FG20W6 FG25W6 D:FD20C6 FD20T6 FD25C6 FD25T6 FD20W6 FD25W6

Item No	Part No.	Mark	Description		Req'd	Remarks : Serial No.
A1	234A8-50103		CYL-ASSY,TILT,RH	ﾃｨﾙﾄｼﾘﾝﾀﾞｱｯｾﾝ	1	INC.1,3-19
A2	234A8-50113		CYL-ASSY,TILT,LH	ﾃｨﾙﾄｼﾘﾝﾀﾞｱｯｾﾝ	1	INC.2-19
901	B-3070A-00103	K1	KIT,REPAIR	ﾘﾍﾟｱｷｯﾄ	2	INC.6,9-12
902	B-B670B-00086	K2	KIT,CYL-TUBE,RH	ｼﾘﾝﾀﾞﾁｭｰﾌﾞｷｯﾄ	1	INC.1,18
903	B-B670B-00087	K3	KIT,CYL-TUBE,LH	ｼﾘﾝﾀﾞﾁｭｰﾌﾞｷｯﾄ	1	INC.2,18
904	B-3065B-00211	K4	KIT,ROD-HEAD	ﾛｯﾄﾞﾍｯﾄﾞｷｯﾄ	2	INC.13,14
905	B-3070B-00217	K5	KIT,CYL-HEAD	ｼﾘﾝﾀﾞﾍｯﾄﾞｷｯﾄ	2	INC.4,5
1	NO PART NO.	#*	TUBE,CYL,RH	ﾁｭｰﾌﾞ	1	
2	NO PART NO.	#*	TUBE,CYL,LH	ﾁｭｰﾌﾞ	1	
3	B-B6127-20612		ROD,PISTON	ﾛｯﾄﾞ	2	
4	NO PART NO.	#*	HEAD,CYL	ﾍｯﾄﾞ	2	
5	B-96401-30159	*	BUSHING	ﾌﾞｯｼﾝｸﾞ	2	
6	B-30961-03012	*	U-RING	Uﾘﾝｸﾞ	2	
7	B-30151-03006		SPACER	ｽﾍﾟｰｻ	2	
8	B-30141-35012		RING,SNAP	ｽﾅｯﾌﾟﾘﾝｸﾞ	2	
9	B-30191-30025	*	RING,WIPER	ﾘﾝｸﾞ	2	
10	B-95112-06000	*	O-RING	Oﾘﾝｸﾞ	4	
11	B-95713-06000	*	RING,BACK-UP	ﾘﾝｸﾞ	6	
12	B-95121-07000	*	O-RING	Oﾘﾝｸﾞ	2	
13	NO PART NO.	#*	HEAD,ROD	ﾍｯﾄﾞ	2	
14	B-30431-35009	*	BUSHING,PIN	ﾌﾞｯｼﾝｸﾞ	2	
15	B-B6341-01401		BOLT	ﾎﾞﾙﾄ	2	
16	B-30311-01403		WASHER	ﾜｯｼｬ	2	
17	B-B6351-01401		NUT	ﾅｯﾄ	2	
18	B-30421-30005	*	BUSHING,PIN	ﾌﾞｯｼﾝｸﾞ	2	
19	B-96111-10613		NIPPLE,GREASE	ﾆｯﾌﾟﾙ	2	
20	234A8-52162		SPACER,L=156	ｽﾍﾟｰｻ	2	[TIL013](3-3 DEG.)
-	215B8-52022		SPACER,L=129	ｽﾍﾟｰｻ	2	[TIL014][TIL016] (3-6,6-6 DEG.)
-	234A8-52172		SPACER,L=93	ｽﾍﾟｰｻ	2	[TIL017](6-10 DEG.)
21	23658-52101		SHIM	ｼﾑ	6	[TIL013][TIL014] (3-3,3-6 DEG.)
-	23658-52101		SHIM	ｼﾑ	6	[TIL016][TIL017] (6-6,6-10 DEG.)
22	01066-10012		SCREW,SET	ｽｸﾘｭｾｯﾄ	2	[TIL013][TIL014] (3-3,3-6 DEG.)
-	01066-10012		SCREW,SET	ｽｸﾘｭｾｯﾄ	2	[TIL016][TIL017] (6-6,6-10 DEG.)
23	23658-52401		PLUG,NYLON	ﾌﾟﾗｸﾞ	2	[TIL013][TIL014] (3-3,3-6 DEG.)
-	23658-52401		PLUG,NYLON	ﾌﾟﾗｸﾞ	2	[TIL016][TIL017] (6-6,6-10 DEG.)
24	22199-12401		CAP,NIPPLE	ｷｬｯﾌﾟ	2	
25	216G8-52201		PIN	ﾋﾟﾝ	2	
26	04901-00100		FITTING	ﾌｨｯﾃｨﾝｸﾞ	2	
27	22199-12401		CAP,NIPPLE	ｷｬｯﾌﾟ	2	
28	216G8-52301		BOLT & WASHER	ﾎﾞﾙﾄ&ﾜｯｼｬ	2	

FIG.219 TILT BOOT [TLB][FC]

(F5028520) ﾃｨﾙﾄﾌﾞｰﾂ

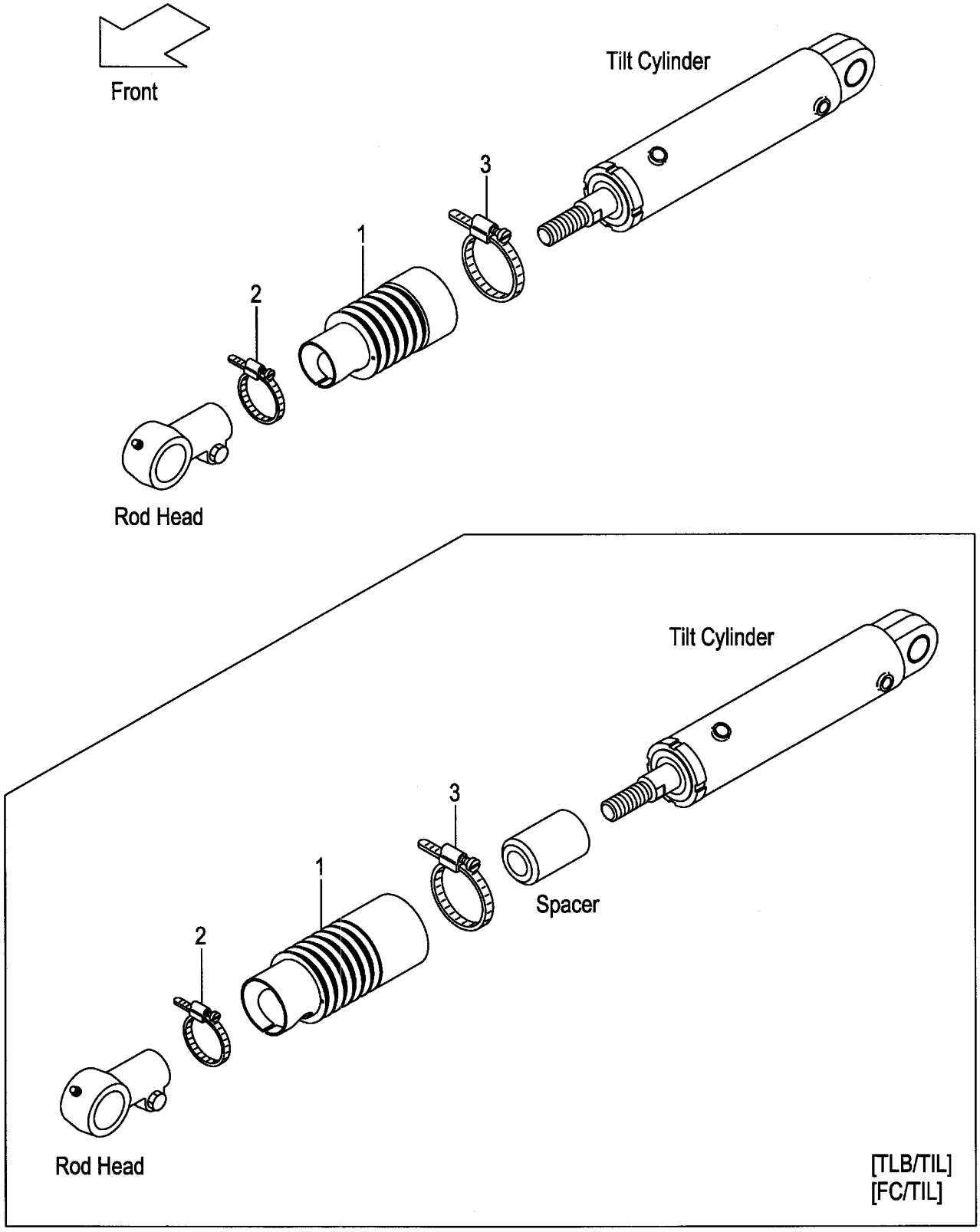

A:FG20C17 FG20T17 FG25C17 FG25T17 C:FD20C17 FD20T17 FD25C17 FD25T17
B:FG20C6 FG20T6 FG25C6 FG25T6 FG20W6 FG25W6 D:FD20C6 FD20T6 FD25C6 FD25T6 FD20W6 FD25W6

Item No	Part No.	Mark	Description		Req'd	Remarks : Serial No.
A1	231A8-51001		BOOT-ASSY,TILT-CYL	ﾌﾞｰﾂｱｯｾﾝ	2	[TLB][FC](6-12 DEG.) INC.1-3
-	231A8-51011		BOOT-ASSY,TILT-CYL	ﾌﾞｰﾂｱｯｾﾝ	2	[TLB/TIL013&014] (3-3,3-6 DEG.) INC.1-3
-	231A8-51011		BOOT-ASSY,TILT-CYL	ﾌﾞｰﾂｱｯｾﾝ	2	[TLB/TIL016&017] (6-6,6-10 DEG.) INC.1-3
-	231A8-51011		BOOT-ASSY,TILT-CYL	ﾌﾞｰﾂｱｯｾﾝ	2	[FC/TIL013&014](3-3,3-6 DEG.) INC.1-3
-	231A8-51011		BOOT-ASSY,TILT-CYL	ﾌﾞｰﾂｱｯｾﾝ	2	[FC/TIL016&017] (6-6,6-10 DEG.) INC.1-3
1	23678-53001		BOOT,TILT-CYL	ﾌﾞｰﾂ	2	[TLB][FC](6-12 DEG.)
-	23678-53101		BOOT,TILT-CYL	ﾌﾞｰﾂ	2	[TLB/TIL013&014] [FC/TIL013&014](3-3,3-6 DEG.)
-	23678-53101		BOOT,TILT-CYL	ﾌﾞｰﾂ	2	[TLB/TIL016&017] [FC/TIL016&017] (6-6,6-10 DEG.)
2	216G8-53001		BAND,50	ﾊﾞﾝﾄﾞ	2	[TLB][FC]
-	216G8-53011		BAND,55	ﾊﾞﾝﾄﾞ	(2)	[TLB][FC]
3	216G8-53051		BAND,90	ﾊﾞﾝﾄﾞ	2	[TLB][FC]
-	224T8-53011		BAND,95	ﾊﾞﾝﾄﾞ	(2)	[TLB][FC]

FIG.220 DECAL (1/2)

(F5029110) デカル(1/2)

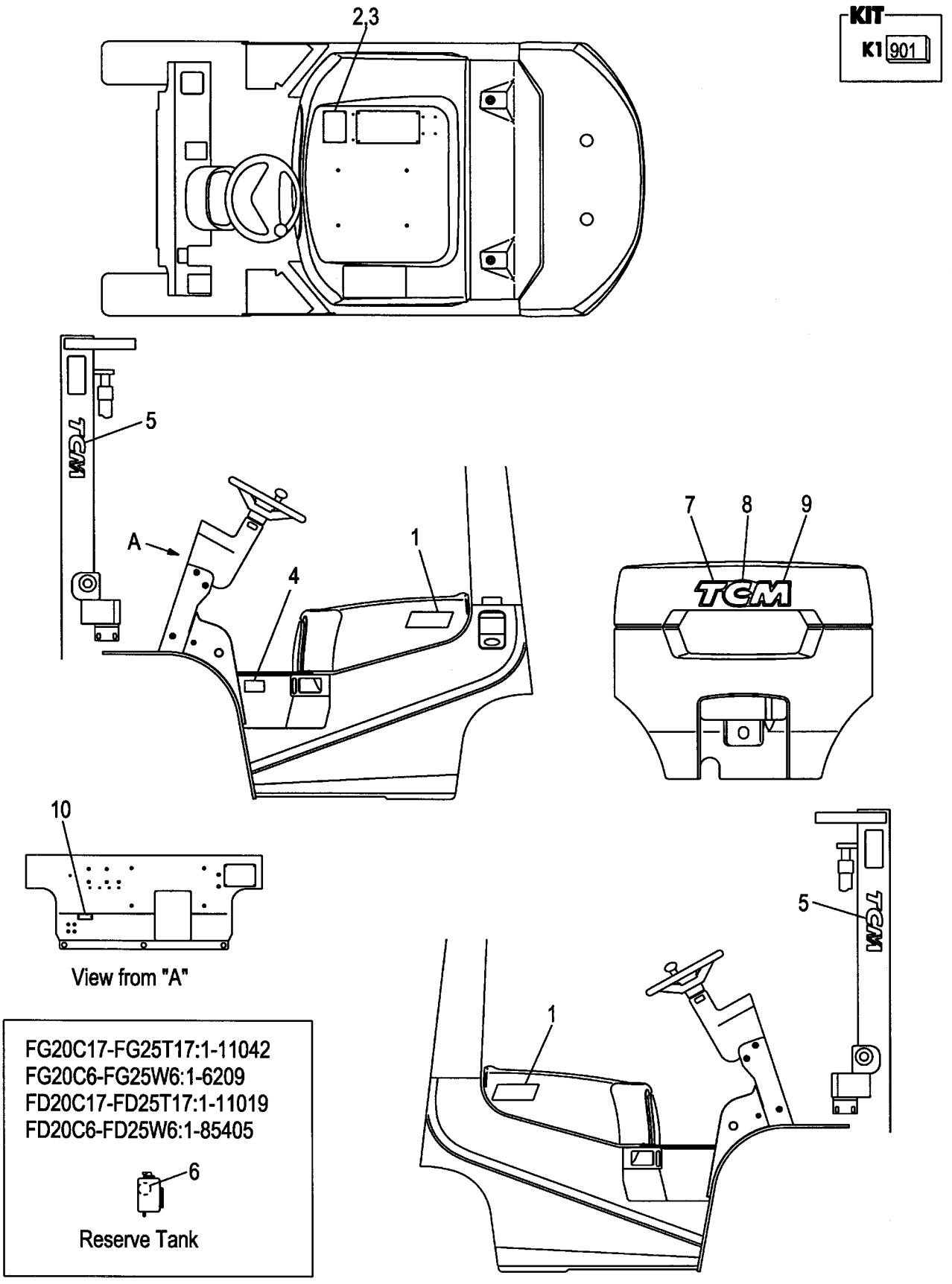

FIG.220
(F5029110)

Item No	Part No.	Mark	Description		Req'd	Remarks : Serial No.
901	236A9-19801	K1	KIT,DECAL	ﾃﾞｶﾙｷｯﾄ	1	INC.4-6 & FIG.221:3-9,12,13
-	236A9-19811	K1	KIT,DECAL	ﾃﾞｶﾙｷｯﾄ	1	C,D,J,K [EXB/ENGLISH] INC.4-6 & FIG.222:3-9,16,17
-	236A9-19811	K1	KIT,DECAL	ﾃﾞｶﾙｷｯﾄ	1	C,D,J,K [EXC] INC.4-6 & FIG.223:3-9,12,13
-	236A9-19811	K1	KIT,DECAL	ﾃﾞｶﾙｷｯﾄ	1	C,D,J,K [EXE/ENGLISH] INC.4-6 & FIG.224:3-9,13,14
-	236A9-19811	K1	KIT,DECAL	ﾃﾞｶﾙｷｯﾄ	1	C,D,J,K [EXK] INC.4-6 & FIG.225:3-9,12,13
-	236A9-19811	K1	KIT,DECAL	ﾃﾞｶﾙｷｯﾄ	1	C,D,J,K [EXN/ENGLISH] INC.4-6 & FIG.226:3-9,13,14
1	239A9-12001		DECAL,MODEL-MARK,20	ﾃﾞｶﾙ	2	A,C,E,G,J,L
-	239C9-12001		DECAL,MODEL-MARK,25	ﾃﾞｶﾙ	2	B,D,F,H,K,M
-	239A9-12011		DECAL,MODEL-MARK,20	ﾃﾞｶﾙ	2	A,C,E,G,J,L [PCL]
-	239C9-12011		DECAL,MODEL-MARK,25	ﾃﾞｶﾙ	2	B,D,F,H,K,M [PCL]
2	27419-12051		CHART,CAPACITY,2.0T	ﾁｬｰﾄ	1	A,C,E,G,J,L [VM200-500]
-	27419-12101		CHART,CAPACITY,2.0T	ﾁｬｰﾄ	1	A,C,E,G,J,L [VM550-600]
-	27539-12011		CHART,CAPACITY,2.5T	ﾁｬｰﾄ	1	B,D,F,H,K,M [VM200-500]
-	27539-12021		CHART,CAPACITY,2.5T	ﾁｬｰﾄ	1	B,D,F,H,K,M [VM550-600]
-	514A3-82331		CHART,CAPACITY	ﾁｬｰﾄ	1	C,D,J,K [EXB/SPANISH][EXE/SPANISH]
-	514A3-82341		CHART,CAPACITY	ﾁｬｰﾄ	1	C,D,J,K [EXB/FRENCH][EXE/FRENCH]
-	522A2-82061		CHART,CAPACITY,2.0T	ﾁｬｰﾄ	1	C,J [VM200-500/EXB/CHINESE]
-	522A2-82111		CHART,CAPACITY,2.0T	ﾁｬｰﾄ	1	C,J [VM550-600/EXB/CHINESE]
-	522E2-82061		CHART,CAPACITY,2.5T	ﾁｬｰﾄ	1	D,K [VM200-500/EXB/CHINESE]
-	522E2-82111		CHART,CAPACITY,2.5T	ﾁｬｰﾄ	1	D,K [VM550-600/EXB/CHINESE]
-	225R9-12011		CHART,CAPACITY,2.0T	ﾁｬｰﾄ	1	C,J [VM200-500/EXB/RUSSIA]
-	225R9-12021		CHART,CAPACITY,2.0T	ﾁｬｰﾄ	1	C,J [VM550-600/EXB/RUSSIA]
-	225S9-12001		CHART,CAPACITY,2.5T	ﾁｬｰﾄ	1	D,K [VM200-500/EXB/RUSSIA]
-	225S9-12011		CHART,CAPACITY,2.5T	ﾁｬｰﾄ	1	D,K [VM550-600/EXB/RUSSIA]

FIG.220 DECAL (1/2)

(F5029110) デカル(1/2)

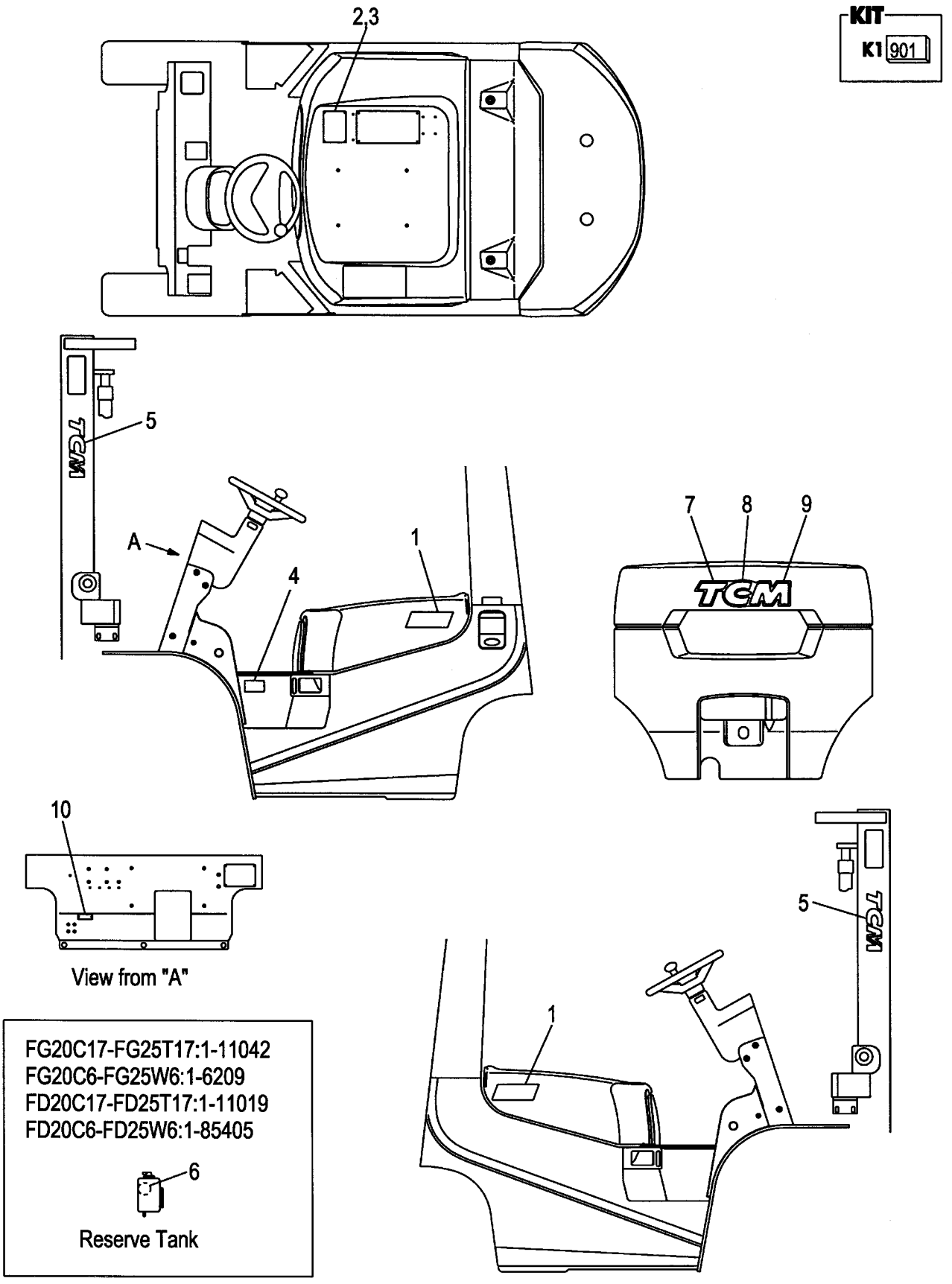

A:FG20C17 FG20T17 D:FG25C6 FG25T6 G:FD20C17 FD20T17 K:FD25C6 FD25T6
B:FG25C17 FG25T17 E:FG20W6 H:FD25C17 FD25T17 L:FD20W6
C:FG20C6 FG20T6 F:FG25W6 J:FD20C6 FD20T6 M:FD25W6

FIG.220
(F5029110)

Item No	Part No.	Mark	Description		Req'd	Remarks : Serial No.
-	514A2-92011		CHART,CAPACITY,2.0T	ﾁｬｰﾄ	1	C,J [EXC]
-	514E2-92001		CHART,CAPACITY,2.5T	ﾁｬｰﾄ	1	D,K [EXC]
-	514A3-82301		CHART,CAPACITY	ﾁｬｰﾄ	1	C,D,J,K [EXE/ENGLISH][EXN/ENGLISH]
-	514A3-82321		CHART,CAPACITY	ﾁｬｰﾄ	1	C,D,J,K [EXE/GERMAN]
-	514A3-82351		CHART,CAPACITY	ﾁｬｰﾄ	1	C,D,J,K [EXE/DUTCH]
-	514A3-82361		CHART,CAPACITY	ﾁｬｰﾄ	1	C,D,J,K [EXE/DANISH][EXN/DANISH]
-	514A3-82371		CHART,CAPACITY	ﾁｬｰﾄ	1	C,D,J,K [EXE/ITALIAN]
-	514A3-82381		CHART,CAPACITY	ﾁｬｰﾄ	1	C,D,J,K [EXE/GREEK]
-	514A3-82391		CHART,CAPACITY	ﾁｬｰﾄ	1	C,D,J,K [EXE/PORTUGUESE]
-	529F3-82111		CHART,CAPACITY	ﾁｬｰﾄ	1	C,D,J,K [EXN/SWEDISH]
-	529F3-82101		CHART,CAPACITY	ﾁｬｰﾄ	1	C,D,J,K [EXN/FINNISH]
3	02432-01008		RIVET	ﾘﾍﾞｯﾄ	4	
4	27049-12172	*	DECAL,AIR-PRESSURE	ﾃﾞｶﾙ	1	
-	225R9-12142		DECAL,AIR-PRESSURE	ﾃﾞｶﾙ	1	C,D,J,K [EXB/RUSSIA]
5	273A9-12242	*	DECAL,TCM	ﾃﾞｶﾙ	2	
6	23659-12101	*	DECAL,L/LIFE-COOLANT	ﾃﾞｶﾙ	1	A,B:1-11042 C,D,E,F:1-6209 G,H:1-11019 J,K,L,H:1-85405
-	522A3-82641		DECAL,L/LIFE-COOLANT	ﾃﾞｶﾙ	1	C,D,J,K [EXB/SPANISH][EXE/SPANISH]
-	522A3-82841		DECAL,L/LIFE-COOLANT	ﾃﾞｶﾙ	1	C,D,J,K [EXB/FRENCH][EXE/FRENCH]
-	232W9-12051		DECAL,L/LIFE-COOLANT	ﾃﾞｶﾙ	1	C,D,J,K [EXB/RUSSIA]
-	522A3-82441		DECAL,L/LIFE-COOLANT	ﾃﾞｶﾙ	1	C,D,J,K [EXE/GERMAN]
-	522A3-83041		DECAL,L/LIFE-COOLANT	ﾃﾞｶﾙ	1	C,D,J,K [EXE/DUTCH]
-	522A3-83241		DECAL,L/LIFE-COOLANT	ﾃﾞｶﾙ	1	C,D,J,K [EXE/DANISH][EXN/DANISH]
-	522A3-83441		DECAL,L/LIFE-COOLANT	ﾃﾞｶﾙ	1	C,D,J,K [EXE/ITALIAN]
-	522A3-83641		DECAL,L/LIFE-COOLANT	ﾃﾞｶﾙ	1	C,D,J,K [EXE/GREEK]
-	522A3-83841		DECAL,L/LIFE-COOLANT	ﾃﾞｶﾙ	1	C,D,J,K [EXE/PORTUGUESE]

FIG.220 DECAL (1/2)

(F5029110) デカル(1/2)

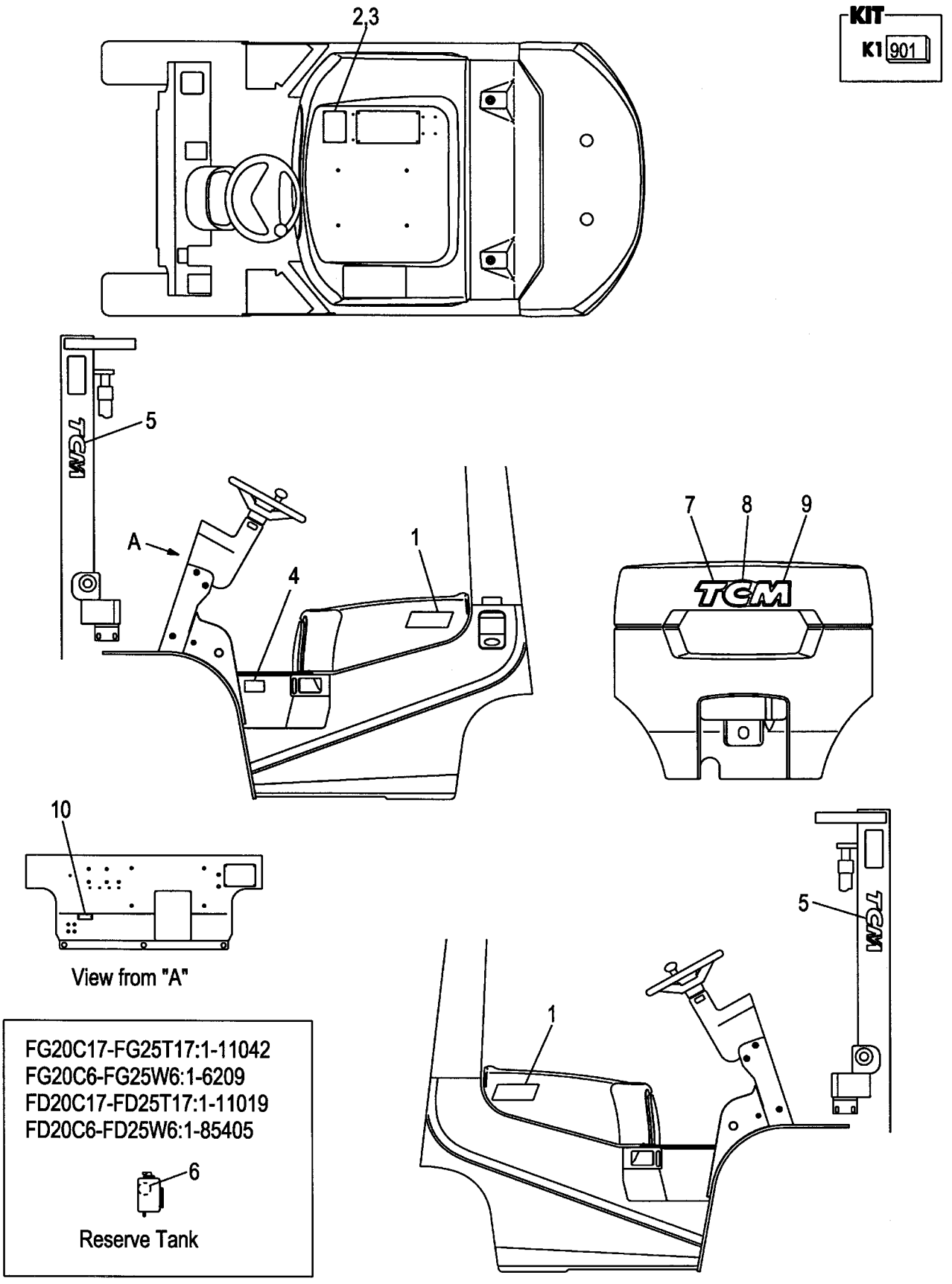

A:FG20C17 FG20T17 D:FG25C6 FG25T6 G:FD20C17 FD20T17 K:FD25C6 FD25T6
B:FG25C17 FG25T17 E:FG20W6 H:FD25C17 FD25T17 L:FD20W6
C:FG20C6 FG20T6 F:FG25W6 J:FD20C6 FD20T6 M:FD25W6

FIG.220
(F5029110)

Item No	Part No.	Mark	Description	Req'd	Remarks : Serial No.
-	529F3-82091		DECAL,L/LIFE-COOLANT デカル	1	C,D,J,K [EXN/SWEDISH]
-	529F3-82081		DECAL,L/LIFE-COOLANT デカル	1	C,D,J,K [EXN/FINNISH]
7	216G9-12013		DECAL,B/WEIGHT,T デカル	1	
8	216G9-12023		DECAL,B/WEIGHT,C デカル	1	
9	216G9-12033		DECAL,B/WEIGHT,M デカル	1	
10	236A9-92101		PLATE,LICENCE プレート	1	A,B
-	238A9-92101		PLATE,LICENCE プレート	1	G,H

FIG.221 DECAL (2/2)

(F5029120) ﾃﾞｶﾙ(2/2)

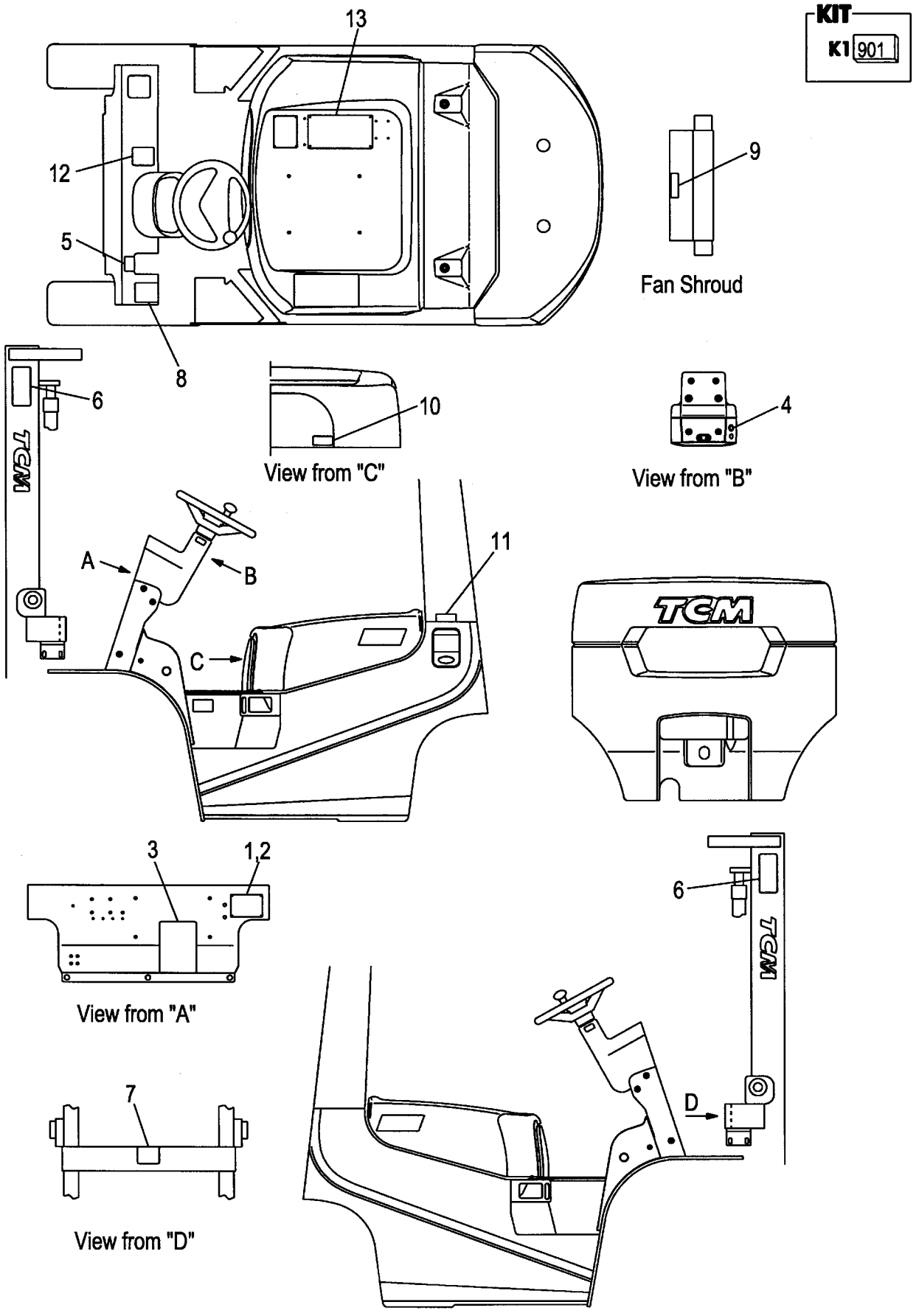

A:FG20C17 FG20T17 FG25C17 FG25T17 C:FD20C17 FD20T17 FD25C17 FD25T17 (F5029120)
B:FG20C6 FG20T6 FG25C6 FG25T6 FG20W6 FG25W6 D:FD20C6 FD20T6 FD25C6 FD25T6 FD20W6 FD25W6

Item No	Part No.	Mark	Description		Req'd	Remarks : Serial No.
901	236A9-19801	K1	KIT,DECAL	ﾃﾞｶﾙｷｯﾄ	1	INC.3-9,12,13 &FIG.220:4-6
1	NO PART NO.	#	PLATE,NAME	ﾌﾟﾚｰﾄ	1	
2	216G9-12131		RIVET	ﾘﾍﾞｯﾄ	4	
3	25789-12051	*	DECAL,LUBRICATION	ﾃﾞｶﾙ	1	
4	216G9-12071	*	DECAL,STARTER-SWITCH	ﾃﾞｶﾙ	1	
5	214A5-53012	*	DECAL,BRAKE-LEVER	ﾃﾞｶﾙ	1	
6	27419-12062	*	DECAL,MAST-CAUTION	ﾃﾞｶﾙ	2	
7	27419-12072	*	DECAL,CROSS-BEAM	ﾃﾞｶﾙ	1	
8	216G9-12062	*	DECAL,TIRE-CAUTION	ﾃﾞｶﾙ	1	
9	216G9-12052	*	DECAL,FAN-CAUTION	ﾃﾞｶﾙ	1	
10	238F9-12071		DECAL,FUEL-CAPACITY	ﾃﾞｶﾙ	1	
11	21239-12501		DECAL,GASOLINE	ﾃﾞｶﾙ	1	A,B
-	21159-12501		DECAL,LIGHT-OIL	ﾃﾞｶﾙ	1	C,D
12	271A9-12251	*	DECAL,CAUTION	ﾃﾞｶﾙ	1	
13	23659-12054		DECAL,WARNING-PLATE	ﾃﾞｶﾙ	1	A:1-11024
						B:1-65465
						C:1-11010
						D:1-84010
-	239A9-12301	*	DECAL,WARNING-PLATE	ﾃﾞｶﾙ	1	A:11025-
						B:65466-
						C:11011-
						D:84011-

FIG.222 DECAL (2/2)[EXB]

(F50291B0) ﾃﾞｶﾙ(2/2)

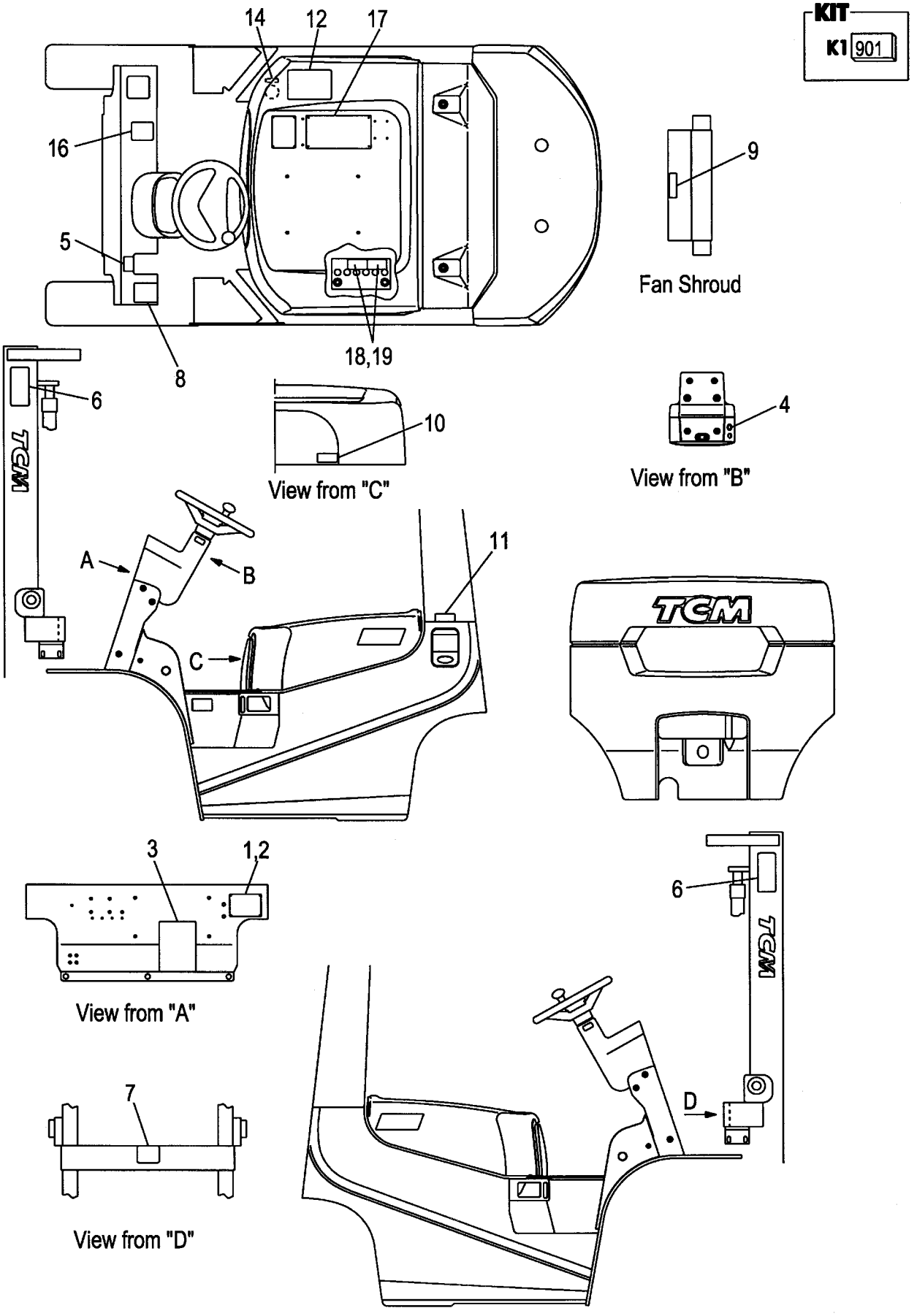

A:FG20C6 FG20T6 FG25C6 FG25T6
B:FD20C6 FD20T6 FD25C6 FD25T6

Item No	Part No.	Mark	Description		Req'd	Remarks : Serial No.
901	236A9-19811	K1	KIT,DECAL	ﾃﾞｶﾙｷｯﾄ	1	[EXB/ENGLISH]
						INC.3-9,16,17 &FIG.220:4-6
1	NO PART NO.	#	PLATE,NAME	ﾌﾟﾚｰﾄ	1	[EXB/ENGLISH]
-	NO PART NO.	#	PLATE,NAME	ﾌﾟﾚｰﾄ	1	[EXB/SPANISH]
-	NO PART NO.	#	PLATE,NAME	ﾌﾟﾚｰﾄ	1	[EXB/FRENCH]
-	NO PART NO.	#	PLATE,NAME	ﾌﾟﾚｰﾄ	1	[EXB/CHINESE]
-	NO PART NO.	#	PLATE,NAME	ﾌﾟﾚｰﾄ	1	[EXB/RUSSIA]
2	216G9-12131		RIVET	ﾘﾍﾞｯﾄ	4	[EXB]
3	52672-72122	*	CHART,LUBRICATION	ﾁｬｰﾄ	1	[EXB/ENGLISH]
-	53652-82352		CHART,LUBRICATION	ﾁｬｰﾄ	1	[EXB/SPANISH]
-	22959-12052		CHART,LUBRICATION	ﾁｬｰﾄ	1	[EXB/FRENCH]
-	52672-82062		CHART,LUBRICATION	ﾁｬｰﾄ	1	[EXB/CHINESE]
-	225R9-12031		CHART,LUBRICATION	ﾁｬｰﾄ	1	[EXB/RUSSIA]
4	216G9-12071	*	DECAL,STARTER-SWITCH	ﾃﾞｶﾙ	1	[EXB]
-	516G3-82011		DECAL,STARTER-SWITCH	ﾃﾞｶﾙ	1	[EXB/SPANISH]
-	232W9-12001		DECAL,STARTER-SWITCH	ﾃﾞｶﾙ	1	[EXB/RUSSIA]
5	514A3-82002	*	DECAL,BRAKE-LEVER	ﾃﾞｶﾙ	1	[EXB/ENGLISH]
-	514A3-82012		DECAL,BRAKE-LEVER	ﾃﾞｶﾙ	1	[EXB/SPANISH]
-	514A3-82022		DECAL,BRAKE-LEVER	ﾃﾞｶﾙ	1	[EXB/FRENCH]
-	514A2-82012		DECAL,BRAKE-LEVER	ﾃﾞｶﾙ	1	[EXB/CHINESE]
-	225R9-12112		DECAL,BRAKE-LEVER	ﾃﾞｶﾙ	1	[EXB/RUSSIA]
6	27419-12061	*	DECAL,MAST-CAUTION	ﾃﾞｶﾙ	2	[EXB]
-	27419-12062		DECAL,MAST-CAUTION	ﾃﾞｶﾙ	2	[EXB/RUSSIA]
7	27419-12071	*	DECAL,CROSS-BEAM	ﾃﾞｶﾙ	1	[EXB]
-	27419-12072		DECAL,CROSS-BEAM	ﾃﾞｶﾙ	1	[EXB/RUSSIA]
8	516G2-72711	*	DECAL,TIRE-CAUTION	ﾃﾞｶﾙ	1	[EXB/ENGLISH]
-	516G3-82211		DECAL,TIRE-CAUTION	ﾃﾞｶﾙ	1	[EXB/SPANISH]
-	516G3-82221		DECAL,TIRE-CAUTION	ﾃﾞｶﾙ	1	[EXB/FRENCH]
-	516G2-82061		DECAL,TIRE-CAUTION	ﾃﾞｶﾙ	1	[EXB/CHINESE]
-	232W9-12021		DECAL,TIRE-CAUTION	ﾃﾞｶﾙ	1	[EXB/RUSSIA]
9	516G2-72701	*	DECAL,FAN-CAUTION	ﾃﾞｶﾙ	1	[EXB/ENGLISH]
-	516G3-82111		DECAL,FAN-CAUTION	ﾃﾞｶﾙ	1	[EXB/SPANISH]
-	516G3-82121		DECAL,FAN-CAUTION	ﾃﾞｶﾙ	1	[EXB/FRENCH]
-	516G2-82051		DECAL,FAN-CAUTION	ﾃﾞｶﾙ	1	[EXB/CHINESE]
-	232W9-12011		DECAL,FAN-CAUTION	ﾃﾞｶﾙ	1	[EXB/RUSSIA]
10	536G2-82181		DECAL,FUEL-CAPACITY	ﾃﾞｶﾙ	1	[EXB/ENGLISH]
-	536G3-82001		DECAL,FUEL-CAPACITY	ﾃﾞｶﾙ	1	[EXB/SPANISH]
-	536G3-82011		DECAL,FUEL-CAPACITY	ﾃﾞｶﾙ	1	[EXB/FRENCH]
-	536G2-82281		DECAL,FUEL-CAPACITY	ﾃﾞｶﾙ	1	[EXB/CHINESE]
-	239T9-12071		DECAL,FUEL-CAPACITY	ﾃﾞｶﾙ	1	[EXB/RUSSIA]
11	51232-82001		DECAL,GASOLINE	ﾃﾞｶﾙ	1	A
						[EXB/ENGLISH]
-	522A2-72111		DECAL,LIGHT-OIL	ﾃﾞｶﾙ	1	B
						[EXB/ENGLISH]
-	51232-82021		DECAL,GASOLINE	ﾃﾞｶﾙ	1	A
						[EXB/SPANISH]
-	51152-82022		DECAL,LIGHT-OIL	ﾃﾞｶﾙ	1	B
						[EXB/SPANISH]
-	51232-82011		DECAL,GASOLINE	ﾃﾞｶﾙ	1	A
						[EXB/FRENCH]

FIG.222 DECAL (2/2)[EXB]

(F50291B0) ﾃﾞｶﾙ(2/2)

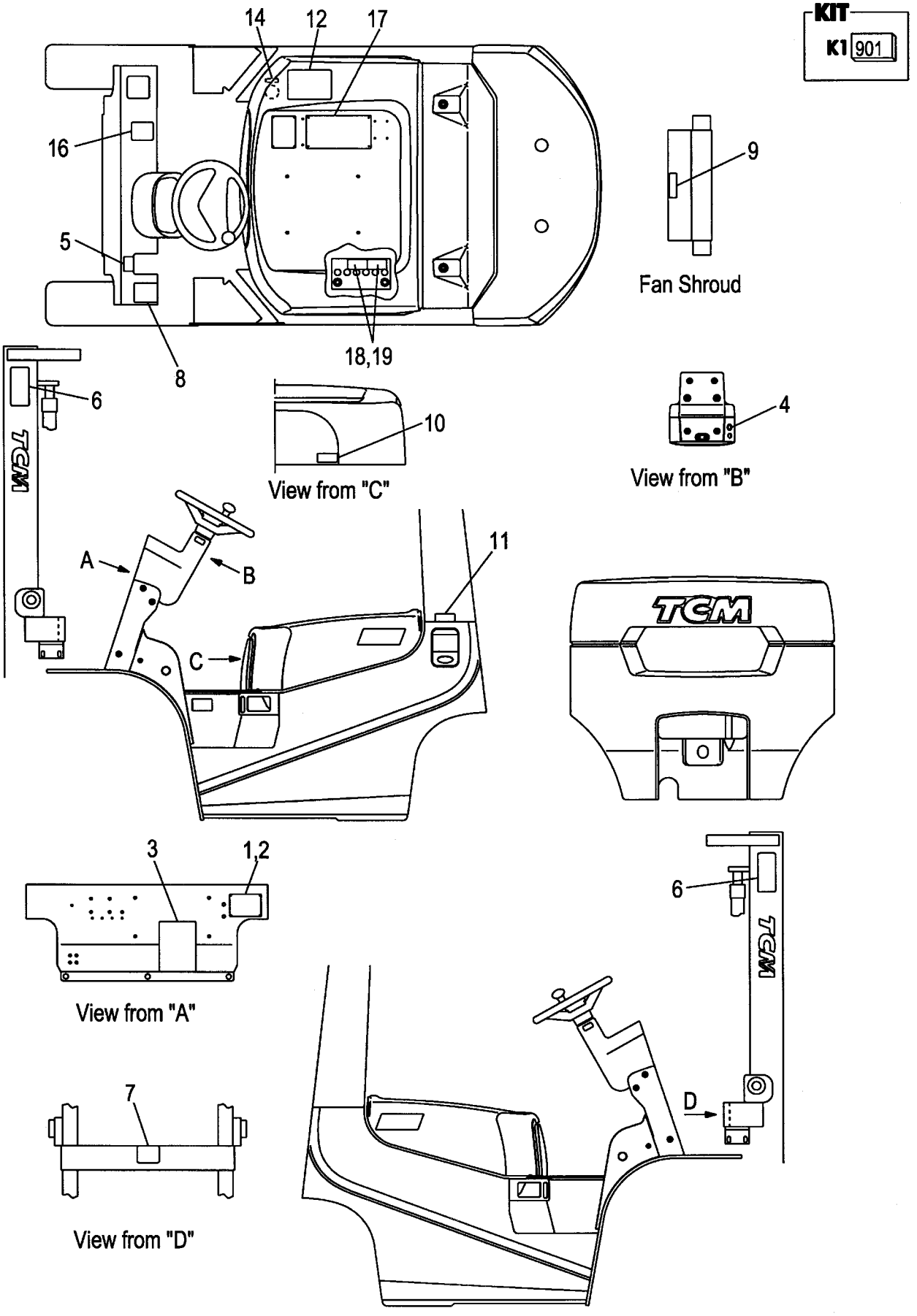

A:FG20C6 FG20T6 FG25C6 FG25T6
B:FD20C6 FD20T6 FD25C6 FD25T6

Item No	Part No.	Mark	Description	Req'd	Remarks : Serial No.
-	51152-82012		DECAL,LIGHT-OIL デカル	1	B [EXB/FRENCH]
-	51232-82032		DECAL,GASOLINE デカル	1	A [EXB/CHINESE]
-	522A2-82151		DECAL,LIGHT-OIL デカル	1	B [EXB/CHINESE]
-	536G2-82021		DECAL,GASOLINE デカル	1	A [EXB/RUSSIA]
-	225R9-12001		DECAL,LIGHT-OIL デカル	1	B [EXB/RUSSIA]
12	53652-82551		DECAL,CAUTION デカル	1	[EXB/CHINESE]
13	225R9-12091	+	DECAL,BATTERY-SWITCH デカル	1	[EXB/RUSSIA]
14	53652-82401		DECAL,OIL デカル	1	[EXB/SPANISH]
-	53652-82011		DECAL,OIL デカル	1	[EXB/FRENCH]
-	53652-82541		DECAL,OIL デカル	1	[EXB/CHINESE]
-	225R9-12071		DECAL,HYDRAULIC-OIL デカル	1	[EXB/RUSSIA]
15	225R9-12081	+	DECAL,PAN-HEATER-OIL デカル	1	[EXB/RUSSIA]
16	571A3-82361	*	DECAL,CAUTION デカル	1	[EXB]
17	516G3-82801	*	DECAL,CAUTION デカル	1	[EXB/ENGLISH]
-	516G3-82821		DECAL,CAUTION デカル	1	[EXB/SPANISH]
-	516G3-82831		DECAL,CAUTION デカル	1	[EXB/FRENCH]
-	52672-82073		DECAL,WARNING-PLATE デカル	1	[EXB/CHINESE]
-	225R9-12052		DECAL,CAUTION デカル	1	[EXB/RUSSIA]
18	534A3-82311		DECAL,BATTERY,A デカル	1	[EXB/ENGLISH]
-	534A3-82331		DECAL,BATTERY,A デカル	1	[EXB/SPANISH]
-	534A3-82341		DECAL,BATTERY,A デカル	1	[EXB/FRENCH]
-	534A3-82531		DECAL,BATTERY デカル	1	[EXB/CHINESE]
-	232W9-12101		DECAL,BATTERY,A デカル	1	[EXB/RUSSIA]
19	534A3-82421		DECAL,BATTERY,B デカル	1	[EXB/ENGLISH] (WITHOUT EXB/CHINESE)
-	534A3-82441		DECAL,BATTERY,B デカル	1	[EXB/SPANISH]
-	534A3-82451		DECAL,BATTERY,B デカル	1	[EXB/FRENCH]
-	232W9-12111		DECAL,BATTERY,B デカル	1	[EXB/RUSSIA]
20	55592-82001	+	DECAL,CERTIFICATE デカル	1	[EXB]

FIG.223 DECAL (2/2)[EXC]

(F50291C0) ﾃﾞｶﾙ(2/2)

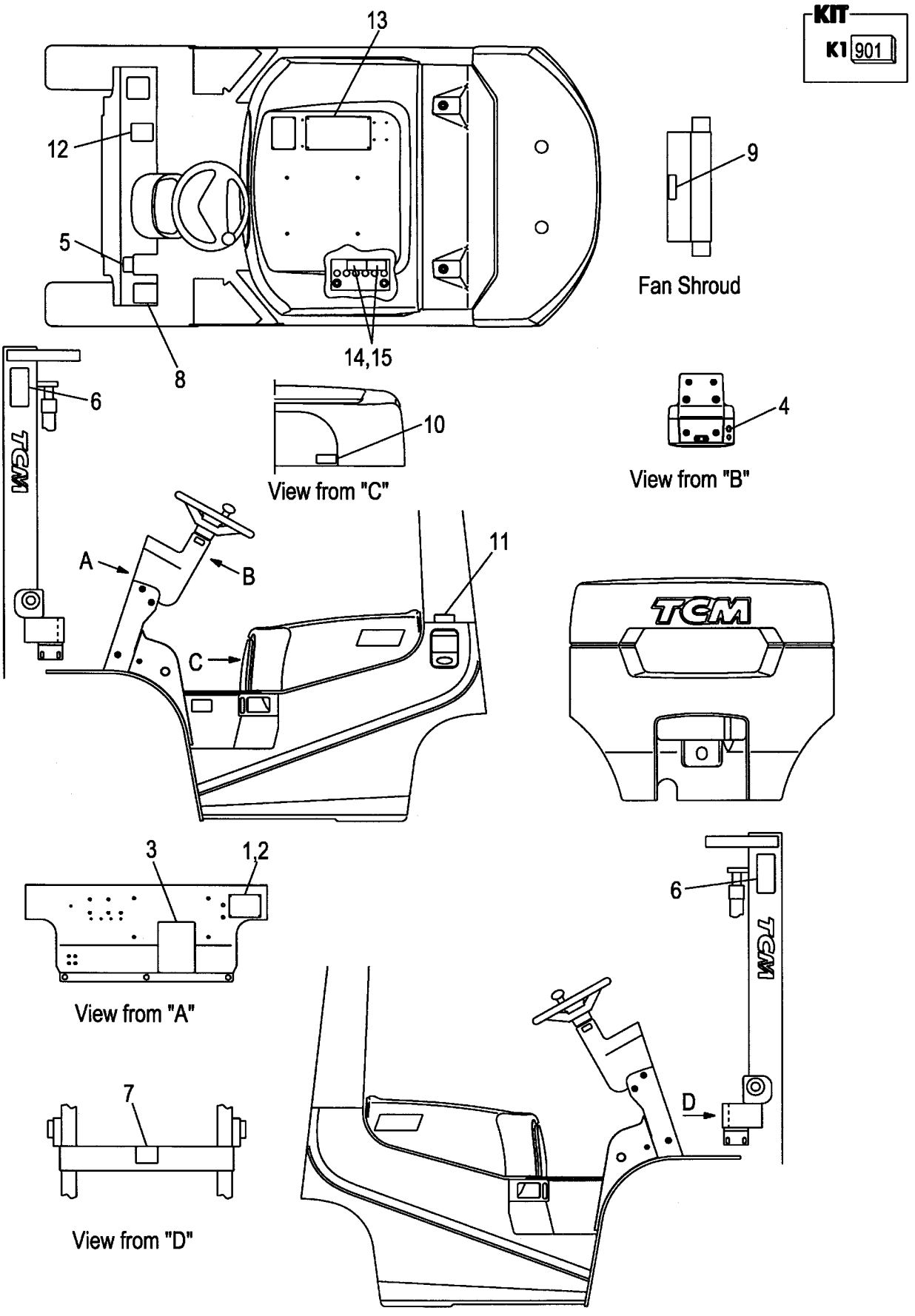

A:FG20C6 FG20T6 FG25C6 FG25T6
B:FD20C6 FD20T6 FD25C6 FD25T6

Item No	Part No.	Mark	Description		Req'd	Remarks : Serial No.
901	236A9-19811	K1	KIT,DECAL	ﾃﾞｶﾙｷｯﾄ	1	[EXC]
						INC.3-9,12,13 &FIG.220:4-6
1	NO PART NO.	#	PLATE,NAME	ﾌﾟﾚｰﾄ	1	[EXC]
2	216G9-12131		RIVET	ﾘﾍﾞｯﾄ	4	[EXC]
3	52672-72122	*	CHART,LUBRICATION	ﾁｬｰﾄ	1	[EXC]
4	216G9-12071		DECAL,STARTER-SWITCH	ﾃﾞｶﾙ	1	[EXC]
5	514A3-82002	*	DECAL,BRAKE-LEVER	ﾃﾞｶﾙ	1	[EXC]
6	27419-12061	*	DECAL,MAST-CAUTION	ﾃﾞｶﾙ	2	[EXC]
7	27419-12071	*	DECAL,CROSS-BEAM	ﾃﾞｶﾙ	1	[EXC]
8	516G2-72711	*	DECAL,TIRE-CAUTION	ﾃﾞｶﾙ	1	[EXC]
9	516G2-72701	*	DECAL,FAN-CAUTION	ﾃﾞｶﾙ	1	[EXC]
10	536G2-82181		DECAL,FUEL-CAPACITY	ﾃﾞｶﾙ	1	[EXC]
11	51232-82001		DECAL,GASOLINE	ﾃﾞｶﾙ	1	A
						[EXC]
-	522A2-72111		DECAL,LIGHT-OIL	ﾃﾞｶﾙ	1	B
						[EXC]
12	571A3-82361	*	DECAL,CAUTION	ﾃﾞｶﾙ	1	[EXC]
13	516G3-82801	*	DECAL,CAUTION	ﾃﾞｶﾙ	1	[EXC]
14	534A3-82311		DECAL,BATTERY,A	ﾃﾞｶﾙ	1	[EXC]
15	534A3-82421		DECAL,BATTERY,B	ﾃﾞｶﾙ	1	[EXC]
16	55592-82001	+	DECAL,CERTIFICATE	ﾃﾞｶﾙ	1	[EXC]

FIG.224 DECAL (2/2)[EXE]

(F50291E0) ﾃﾞｶﾙ(2/2)

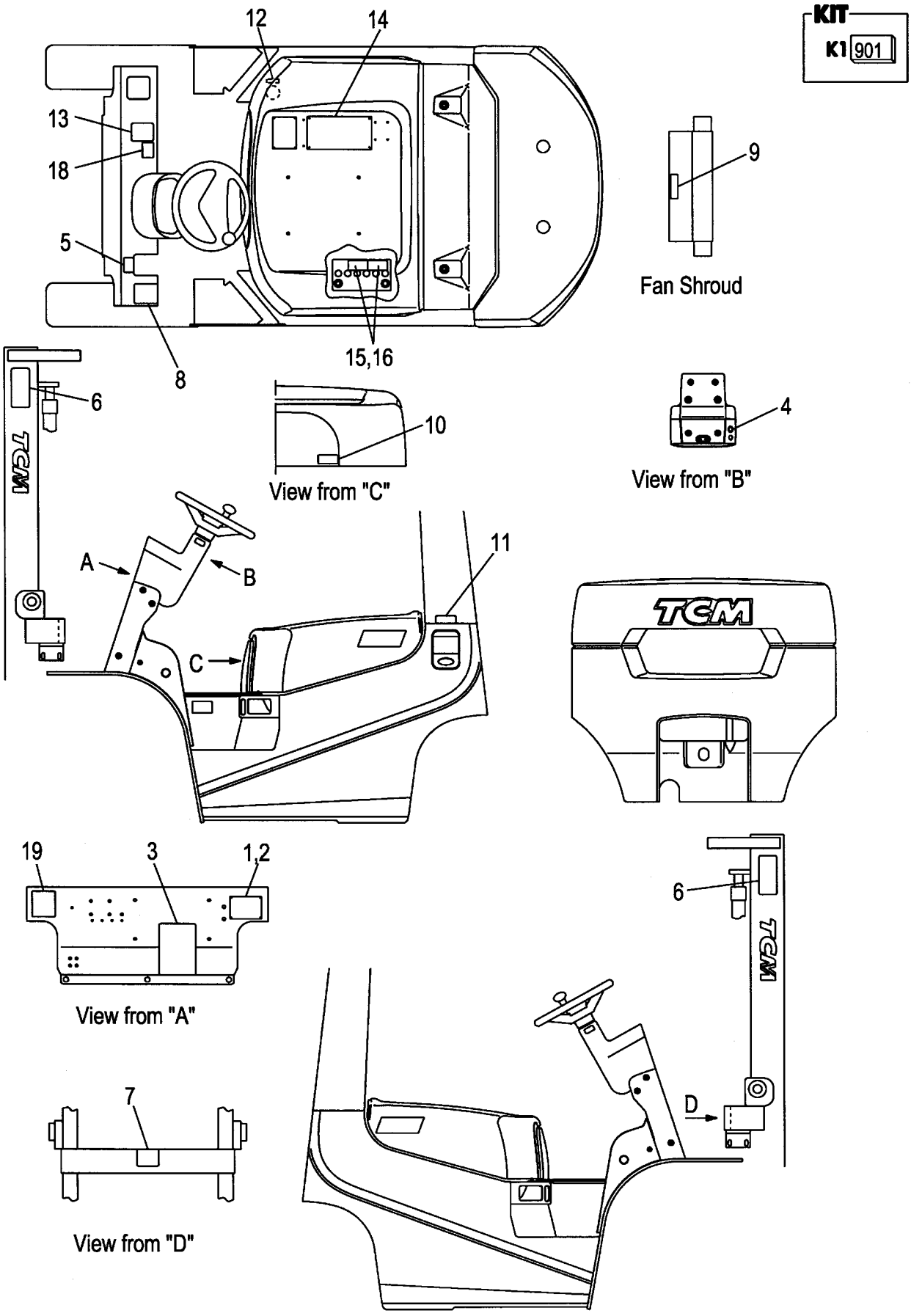

A:FG20C6 FG25C6 C:FD20C6 FD25C6
B:FG20T6 FG25T6 D:FD20T6 FD25T6

Item No	Part No.	Mark	Description		Req'd	Remarks : Serial No.
901	236A9-19811	K1	KIT,DECAL	ﾃﾞｶﾙｷｯﾄ	1	[EXE/ENGLISH]
						INC.3-9,13,14 &FIG.220:4-6
1	NO PART NO.	#	PLATE,NAME	ﾌﾟﾚｰﾄ	1	[EXE/ENGLISH]
-	NO PART NO.	#	PLATE,NAME	ﾌﾟﾚｰﾄ	1	[EXE/SPANISH]
-	NO PART NO.	#	PLATE,NAME	ﾌﾟﾚｰﾄ	1	[EXE/FRENCH]
-	NO PART NO.	#	PLATE,NAME	ﾌﾟﾚｰﾄ	1	[EXE/GERMAN]
-	NO PART NO.	#	PLATE,NAME	ﾌﾟﾚｰﾄ	1	[EXE/DUTCH]
-	NO PART NO.	#	PLATE,NAME	ﾌﾟﾚｰﾄ	1	[EXE/DANISH]
-	NO PART NO.	#	PLATE,NAME	ﾌﾟﾚｰﾄ	1	[EXE/ITALIAN]
-	NO PART NO.	#	PLATE,NAME	ﾌﾟﾚｰﾄ	1	[EXE/GREEK]
-	NO PART NO.	#	PLATE,NAME	ﾌﾟﾚｰﾄ	1	[EXE/PORTUGUESE]
2	216G9-12131		RIVET	ﾘﾍﾞｯﾄ	4	[EXE]
3	52672-72122	*	CHART,LUBRICATION	ﾁｬｰﾄ	1	[EXE/ENGLISH]
-	53652-82352		CHART,LUBRICATION	ﾁｬｰﾄ	1	[EXE/SPANISH]
-	22959-12052		CHART,LUBRICATION	ﾁｬｰﾄ	1	[EXE/FRENCH]
-	55953-02032		CHART,LUBRICATION	ﾁｬｰﾄ	1	[EXE/GERMAN]
-	522A3-83081		CHART,LUBRICATION	ﾁｬｰﾄ	1	[EXE/DUTCH]
-	522A3-83281		CHART,LUBRICATION	ﾁｬｰﾄ	1	[EXE/DANISH]
-	522A3-83481		CHART,LUBRICATION	ﾁｬｰﾄ	1	[EXE/ITALIAN]
-	522A3-83681		CHART,LUBRICATION	ﾁｬｰﾄ	1	[EXE/GREEK]
-	522A3-83881		CHART,LUBRICATION	ﾁｬｰﾄ	1	[EXE/PORTUGUESE]
4	216G9-12071		DECAL,STARTER-SWITCH	ﾃﾞｶﾙ	1	[EXE]
-	516G3-82011		DECAL,STARTER-SWITCH	ﾃﾞｶﾙ	1	[EXE/SPANISH]
-	516G3-82001		DECAL,STARTER-SWITCH	ﾃﾞｶﾙ	1	[EXE/GERMAN]
-	516G3-82021		DECAL,STARTER-SWITCH	ﾃﾞｶﾙ	1	[EXE/DUTCH]
-	516G3-82031		DECAL,STARTER-SWITCH	ﾃﾞｶﾙ	1	[EXE/DANISH]
-	516G3-82041		DECAL,STARTER-SWITCH	ﾃﾞｶﾙ	1	[EXE/ITALIAN]
-	516G3-82051		DECAL,STARTER-SWITCH	ﾃﾞｶﾙ	1	[EXE/GREEK]
5	514A3-82002	*	DECAL,BRAKE-LEVER	ﾃﾞｶﾙ	1	[EXE/ENGLISH]
-	514A3-82012		DECAL,BRAKE-LEVER	ﾃﾞｶﾙ	1	[EXE/SPANISH]
-	514A3-82022		DECAL,BRAKE-LEVER	ﾃﾞｶﾙ	1	[EXE/FRENCH]
-	514A3-02002		DECAL,BRAKE-LEVER	ﾃﾞｶﾙ	1	[EXE/GERMAN]
-	514A3-82032		DECAL,BRAKE-LEVER	ﾃﾞｶﾙ	1	[EXE/DUTCH]
-	514A3-82042		DECAL,BRAKE-LEVER	ﾃﾞｶﾙ	1	[EXE/DANISH]
-	514A3-82052		DECAL,BRAKE-LEVER	ﾃﾞｶﾙ	1	[EXE/ITALIAN]
-	514A3-82062		DECAL,BRAKE-LEVER	ﾃﾞｶﾙ	1	[EXE/GREEK]
-	514A3-82072		DECAL,BRAKE-LEVER	ﾃﾞｶﾙ	1	[EXE/PORTUGUESE]
6	27419-12061	*	DECAL,MAST-CAUTION	ﾃﾞｶﾙ	2	[EXE]
7	27419-12071	*	DECAL,CROSS-BEAM	ﾃﾞｶﾙ	1	[EXE]
8	516G2-72711	*	DECAL,TIRE-CAUTION	ﾃﾞｶﾙ	1	[EXE/ENGLISH]
-	516G3-82211		DECAL,TIRE-CAUTION	ﾃﾞｶﾙ	1	[EXE/SPANISH]
-	516G3-82221		DECAL,TIRE-CAUTION	ﾃﾞｶﾙ	1	[EXE/FRENCH]
-	516G3-82201		DECAL,TIRE-CAUTION	ﾃﾞｶﾙ	1	[EXE/GERMAN]
-	516G3-82232		DECAL,TIRE-CAUTION	ﾃﾞｶﾙ	1	[EXE/DUTCH]
-	516G3-82241		DECAL,TIRE-CAUTION	ﾃﾞｶﾙ	1	[EXE/DANISH]
-	516G3-82251		DECAL,TIRE-CAUTION	ﾃﾞｶﾙ	1	[EXE/ITALIAN]
-	516G3-82261		DECAL,TIRE-CAUTION	ﾃﾞｶﾙ	1	[EXE/GREEK]
-	516G3-82271		DECAL,TIRE-CAUTION	ﾃﾞｶﾙ	1	[EXE/PORTUGUESE]
9	516G2-72701	*	DECAL,FAN-CAUTION	ﾃﾞｶﾙ	1	[EXE/ENGLISH]
-	516G3-82111		DECAL,FAN-CAUTION	ﾃﾞｶﾙ	1	[EXE/SPANISH]

FIG.224 DECAL (2/2)[EXE]

(F50291E0) ﾃﾞｶﾙ(2/2)

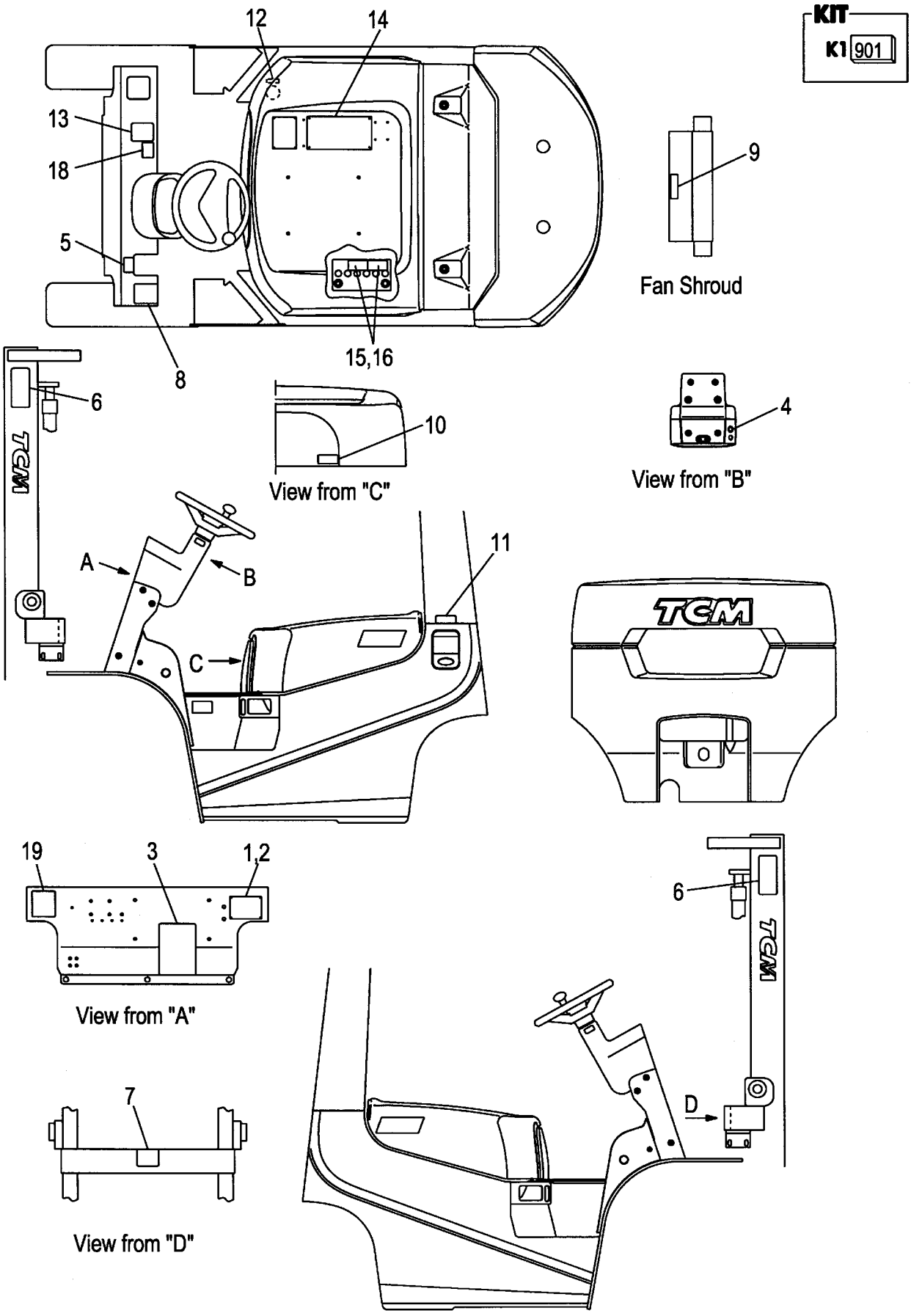

A:FG20C6 FG25C6 C:FD20C6 FD25C6
B:FG20T6 FG25T6 D:FD20T6 FD25T6

Item No	Part No.	Mark	Description	Req'd	Remarks : Serial No.
-	516G3-82121		DECAL,FAN-CAUTION デカル	1	[EXE/FRENCH]
-	516G3-82101		DECAL,FAN-CAUTION デカル	1	[EXE/GERMAN]
-	516G3-82131		DECAL,FAN-CAUTION デカル	1	[EXE/DUTCH]
-	516G3-82141		DECAL,FAN-CAUTION デカル	1	[EXE/DANISH]
-	516G3-82151		DECAL,FAN-CAUTION デカル	1	[EXE/ITALIAN]
-	516G3-82161		DECAL,FAN-CAUTION デカル	1	[EXE/GREEK]
-	516G3-82171		DECAL,FAN-CAUTION デカル	1	[EXE/PORTUGUESE]
10	536G2-82181		DECAL,FUEL-CAPACITY デカル	1	[EXE/ENGLISH]
-	536G3-82001		DECAL,FUEL-CAPACITY デカル	1	[EXE/SPANISH]
-	536G3-82011		DECAL,FUEL-CAPACITY デカル	1	[EXE/FRENCH]
-	536G3-82021		DECAL,FUEL-CAPACITY デカル	1	[EXE/GERMAN]
-	536G3-82031		DECAL,FUEL-CAPACITY デカル	1	[EXE/DUTCH]
-	536G3-82041		DECAL,FUEL-CAPACITY デカル	1	[EXE/DANISH]
-	536G3-82051		DECAL,FUEL-CAPACITY デカル	1	[EXE/ITALIAN]
-	536G3-82061		DECAL,FUEL-CAPACITY デカル	1	[EXE/GREEK]
-	536G3-82071		DECAL,FUEL-CAPACITY デカル	1	[EXE/PORTUGUESE]
11	51232-82001		DECAL,GASOLINE デカル	1	A,B [EXE/ENGLISH]
-	522A2-72111		DECAL,LIGHT-OIL デカル	1	C,D [EXE/ENGLISH]
-	51232-82021		DECAL,GASOLINE デカル	1	A,B [EXE/SPANISH]
-	51152-82022		DECAL,LIGHT-OIL デカル	1	C,D [EXE/SPANISH]
-	51232-82011		DECAL,GASOLINE デカル	1	A,B [EXE/FRENCH]
-	51152-82012		DECAL,LIGHT-OIL デカル	1	C,D [EXE/FRENCH]
-	51233-02011		DECAL,GASOLINE デカル	1	A,B [EXE/GERMAN]
-	51153-02001		DECAL,LIGHT-OIL デカル	1	C,D [EXE/GERMAN]
-	51233-83021		DECAL,GASOLINE デカル	1	A,B [EXE/DUTCH]
-	522A3-83021		DECAL,LIGHT-OIL デカル	1	C,D [EXE/DUTCH]
-	51233-83221		DECAL,GASOLINE デカル	1	A,B [EXE/DANISH]
-	522A3-83221		DECAL,LIGHT-OIL デカル	1	C,D [EXE/DANISH]
-	51233-83421		DECAL,GASOLINE デカル	1	A,B [EXE/ITALIAN]
-	522A3-83421		DECAL,LIGHT-OIL デカル	1	C,D [EXE/ITALIAN]
-	51233-83621		DECAL,GASOLINE デカル	1	A,B [EXE/GREEK]
-	522A3-83621		DECAL,LIGHT-OIL デカル	1	C,D [EXE/GREEK]
-	51233-83821		DECAL,GASOLINE デカル	1	A,B [EXE/PORTUGUESE]

FIG.224 DECAL (2/2)[EXE]

(F50291E0) ﾃﾞｶﾙ(2/2)

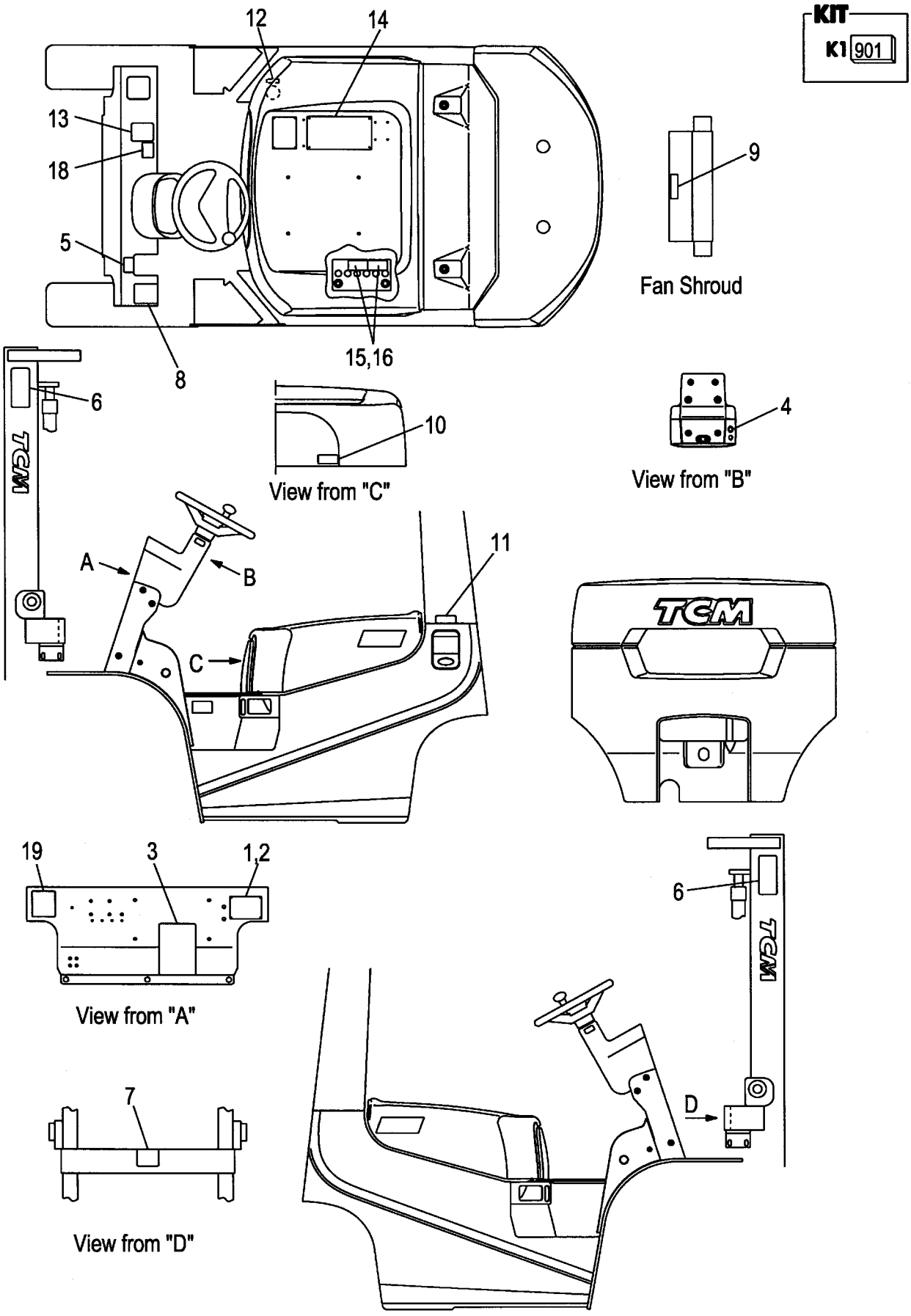

A:FG20C6 FG25C6 C:FD20C6 FD25C6
B:FG20T6 FG25T6 D:FD20T6 FD25T6

Item No	Part No.	Mark	Description		Req'd	Remarks : Serial No.
-	522A3-83821		DECAL,LIGHT-OIL	ﾃﾞｶﾙ	1	C,D [EXE/PORTUGUESE]
12	53652-82401		DECAL,OIL	ﾃﾞｶﾙ	1	[EXE/SPANISH]
-	53652-82011		DECAL,OIL	ﾃﾞｶﾙ	1	[EXE/FRENCH]
-	51233-02021		DECAL,OIL	ﾃﾞｶﾙ	1	[EXE/GERMAN]
-	522A3-83061		DECAL,OIL	ﾃﾞｶﾙ	1	[EXE/DUTCH][EXE/DANISH]
-	522A3-83461		DECAL,OIL	ﾃﾞｶﾙ	1	[EXE/ITALIAN]
-	522A3-83661		DECAL,OIL	ﾃﾞｶﾙ	1	[EXE/GREEK]
-	522A3-83861		DECAL,OIL	ﾃﾞｶﾙ	1	[EXE/PORTUGUESE]
13	571A3-82361	*	DECAL,CAUTION	ﾃﾞｶﾙ	1	[EXE]
14	516G3-82801	*	DECAL,CAUTION	ﾃﾞｶﾙ	1	[EXE/ENGLISH]
-	516G3-82821		DECAL,CAUTION	ﾃﾞｶﾙ	1	[EXE/SPANISH]
-	516G3-82831		DECAL,CAUTION	ﾃﾞｶﾙ	1	[EXE/FRENCH]
-	516G3-82811		DECAL,CAUTION	ﾃﾞｶﾙ	1	[EXE/GERMAN]
-	516G3-82841		DECAL,CAUTION	ﾃﾞｶﾙ	1	[EXE/DUTCH]
-	516G3-82851		DECAL,CAUTION	ﾃﾞｶﾙ	1	[EXE/DANISH]
-	516G3-82861		DECAL,CAUTION	ﾃﾞｶﾙ	1	[EXE/ITALIAN]
-	516G3-82871		DECAL,CAUTION	ﾃﾞｶﾙ	1	[EXE/GREEK]
-	516G3-82881		DECAL,CAUTION	ﾃﾞｶﾙ	1	[EXE/PORTUGUESE]
15	534A3-82311		DECAL,BATTERY,A	ﾃﾞｶﾙ	1	[EXE/ENGLISH]
-	534A3-82331		DECAL,BATTERY,A	ﾃﾞｶﾙ	1	[EXE/SPANISH]
-	534A3-82341		DECAL,BATTERY,A	ﾃﾞｶﾙ	1	[EXE/FRENCH]
-	534A3-82321		DECAL,BATTERY,A	ﾃﾞｶﾙ	1	[EXE/GERMAN]
-	534A3-82351		DECAL,BATTERY,A	ﾃﾞｶﾙ	1	[EXE/DUTCH]
-	534A3-82361		DECAL,BATTERY,A	ﾃﾞｶﾙ	1	[EXE/DANISH]
-	534A3-82371		DECAL,BATTERY,A	ﾃﾞｶﾙ	1	[EXE/ITALIAN]
-	534A3-82381		DECAL,BATTERY,A	ﾃﾞｶﾙ	1	[EXE/GREEK]
-	534A3-82391		DECAL,BATTERY,A	ﾃﾞｶﾙ	1	[EXE/PORTUGUESE]
16	534A3-82421		DECAL,BATTERY,B	ﾃﾞｶﾙ	1	[EXE/ENGLISH]
-	534A3-82441		DECAL,BATTERY,B	ﾃﾞｶﾙ	1	[EXE/SPANISH]
-	534A3-82451		DECAL,BATTERY,B	ﾃﾞｶﾙ	1	[EXE/FRENCH]
-	534A3-82431		DECAL,BATTERY,B	ﾃﾞｶﾙ	1	[EXE/GERMAN]
-	534A3-82461		DECAL,BATTERY,B	ﾃﾞｶﾙ	1	[EXE/DUTCH]
-	534A3-82471		DECAL,BATTERY,B	ﾃﾞｶﾙ	1	[EXE/DANISH]
-	534A3-82481		DECAL,BATTERY,B	ﾃﾞｶﾙ	1	[EXE/ITALIAN]
-	534A3-82491		DECAL,BATTERY,B	ﾃﾞｶﾙ	1	[EXE/GREEK]
-	534A3-82501		DECAL,BATTERY,B	ﾃﾞｶﾙ	1	[EXE/PORTUGUESE]
17	55592-82001	†	DECAL,CERTIFICATE	ﾃﾞｶﾙ	1	[EXE]
18	535H3-82411		DECAL,CREEP-CAUTION	ﾃﾞｶﾙ	1	B,D [EXE/ENGLISH]
-	535H3-82421		DECAL,CREEP-CAUTION	ﾃﾞｶﾙ	1	B,D [EXE/SPANISH]
-	535H3-82431		DECAL,CREEP-CAUTION	ﾃﾞｶﾙ	1	B,D [EXE/FRENCH]
-	535H3-82441		DECAL,CREEP-CAUTION	ﾃﾞｶﾙ	1	B,D [EXE/GERMAN]
-	535H3-82451		DECAL,CREEP-CAUTION	ﾃﾞｶﾙ	1	B,D [EXE/DUTCH]
-	535H3-82461		DECAL,CREEP-CAUTION	ﾃﾞｶﾙ	1	B,D [EXE/DANISH]

FIG.224 DECAL (2/2)[EXE]

(F50291E0) ﾃﾞｶﾙ(2/2)

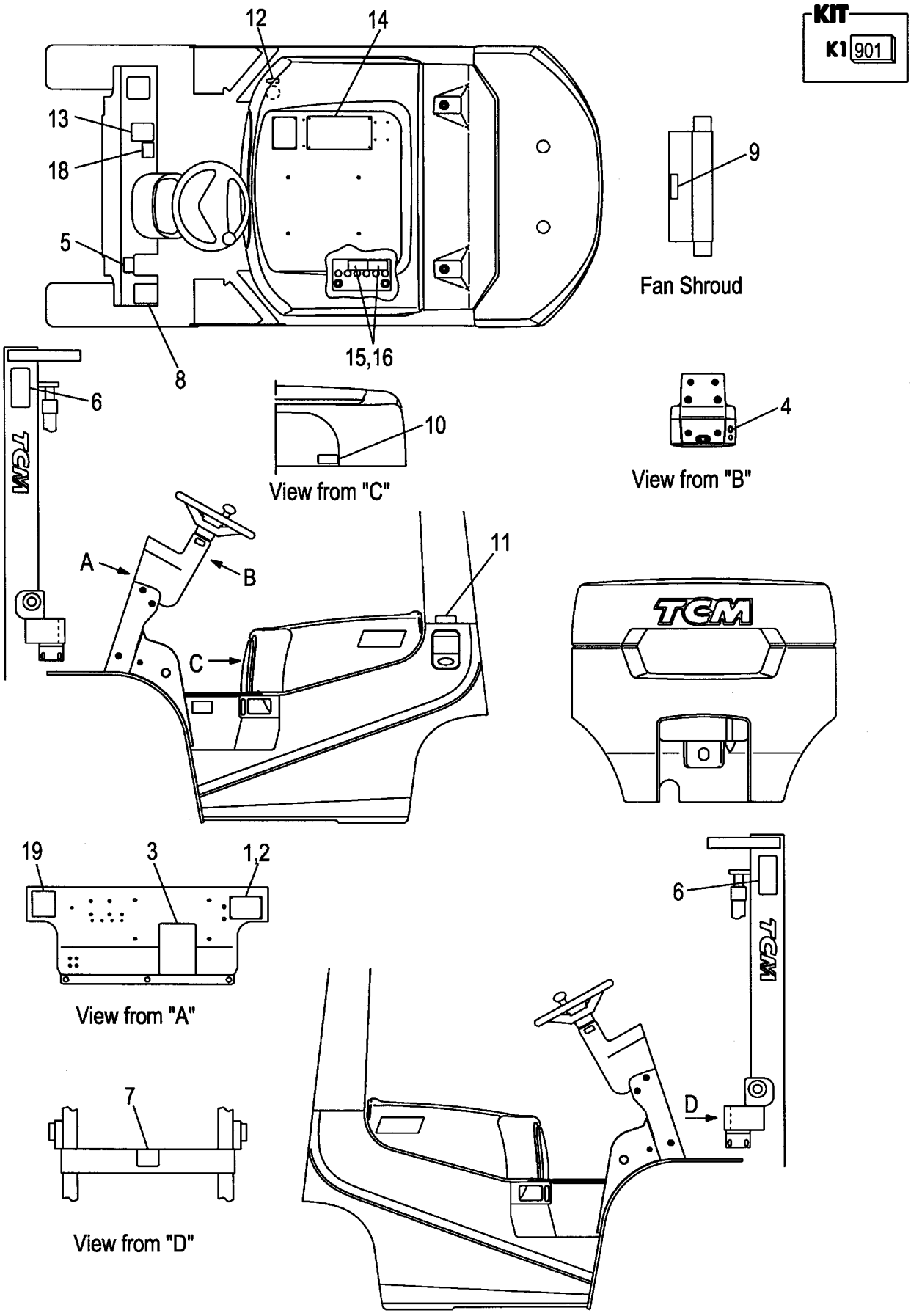

A:FG20C6 FG25C6 C:FD20C6 FD25C6
B:FG20T6 FG25T6 D:FD20T6 FD25T6

Item No	Part No.	Mark	Description	Req'd	Remarks : Serial No.
-	535H3-82471		DECAL,CREEP-CAUTION デカル	1	B,D [EXE/ITALIAN]
-	535H3-82481		DECAL,CREEP-CAUTION デカル	1	B,D [EXE/GREEK]
-	535H3-82491		DECAL,CREEP-CAUTION デカル	1	B,D [EXE/PORTUGUESE]
19	535E3-82241		DECAL,EC-SOUND デカル	1	A,B:66039- [EXE]
-	535E3-82231		DECAL,EC-SOUND デカル	1	C,D:83854- [EXE]

FIG.225 DECAL (2/2)[EXK]

(F50291K0) ﾃﾞｶﾙ(2/2)

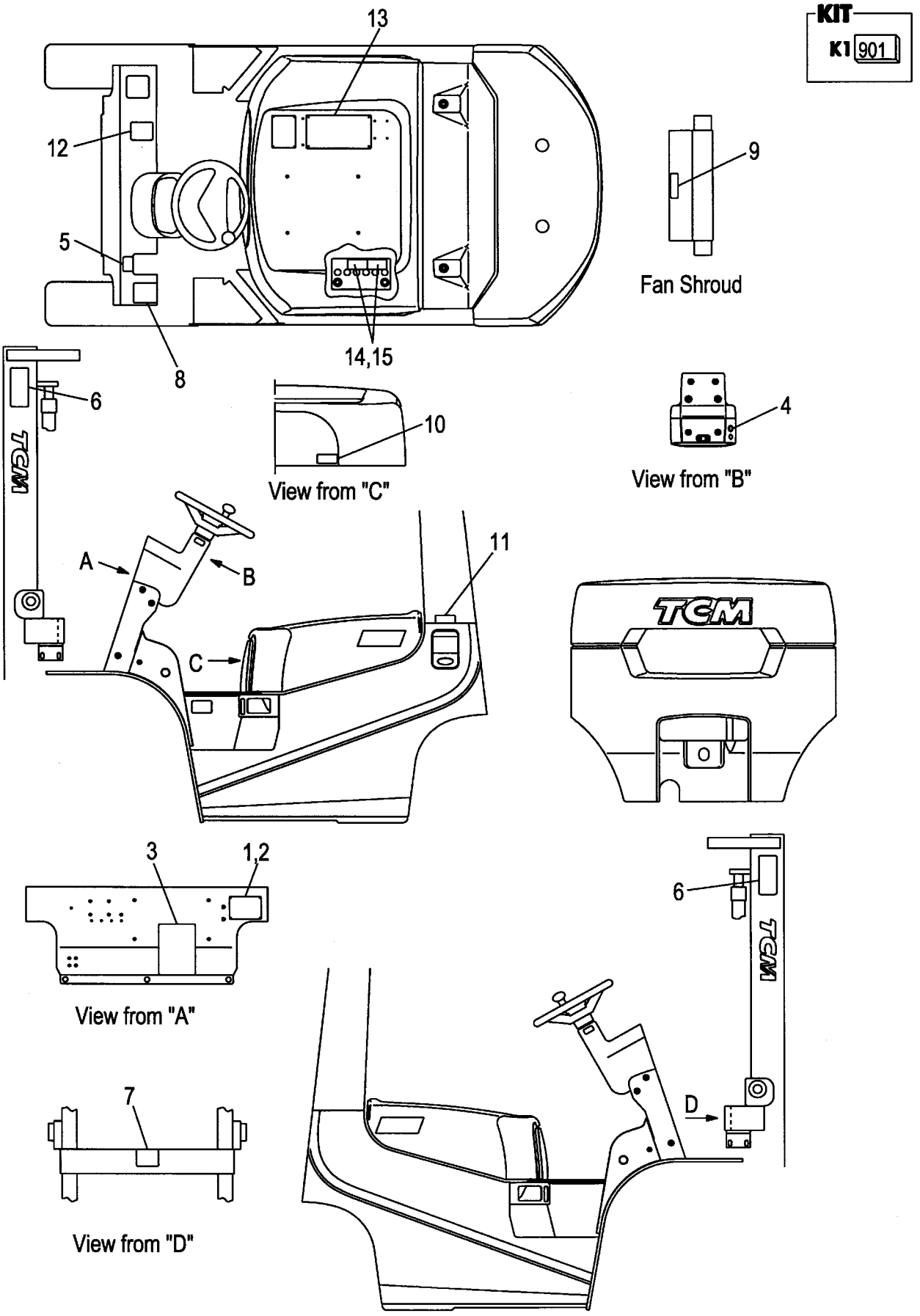

A:FG20C6 FG20T6 FG25C6 FG25T6
B:FD20C6 FD20T6 FD25C6 FD25T6

Item No	Part No.	Mark	Description		Req'd	Remarks : Serial No.
901	236A9-19811	K1	KIT,DECAL	ﾃﾞｶﾙｷｯﾄ	1	[EXK]
						INC.3-9,12,13 &FIG.220:4-6
1	NO PART NO.	#	PLATE,NAME	ﾌﾟﾚｰﾄ	1	[EXK]
2	216G9-12131		RIVET	ﾘﾍﾞｯﾄ	4	[EXK]
3	52672-72122	*	CHART,LUBRICATION	ﾁｬｰﾄ	1	[EXK]
4	216G9-12071		DECAL,STARTER-SWITCH	ﾃﾞｶﾙ	1	[EXK]
5	514A3-82002	*	DECAL,BRAKE-LEVER	ﾃﾞｶﾙ	1	[EXK]
6	27419-12061	*	DECAL,MAST-CAUTION	ﾃﾞｶﾙ	2	[EXK]
7	27419-12071	*	DECAL,CROSS-BEAM	ﾃﾞｶﾙ	1	[EXK]
8	516G2-72711	*	DECAL,TIRE-CAUTION	ﾃﾞｶﾙ	1	[EXK]
9	516G2-72701	*	DECAL,FAN-CAUTION	ﾃﾞｶﾙ	1	[EXK]
10	536G2-82181		DECAL,FUEL-CAPACITY	ﾃﾞｶﾙ	1	[EXK]
11	51232-82001		DECAL,GASOLINE	ﾃﾞｶﾙ	1	A
						[EXK]
-	522A2-72111		DECAL,LIGHT-OIL	ﾃﾞｶﾙ	1	B
						[EXK]
12	571A3-82361	*	DECAL,CAUTION	ﾃﾞｶﾙ	1	[EXK]
13	516G3-82801	*	DECAL,CAUTION	ﾃﾞｶﾙ	1	[EXK]
14	534A3-82311		DECAL,BATTERY,A	ﾃﾞｶﾙ	1	[EXK]
15	534A3-82421		DECAL,BATTERY,B	ﾃﾞｶﾙ	1	[EXK]
16	55592-82001	+	DECAL,CERTIFICATE	ﾃﾞｶﾙ	1	[EXK]

FIG.226 DECAL (2/2)[EXN]

(F50291N0) ﾃﾞｶﾙ(2/2)

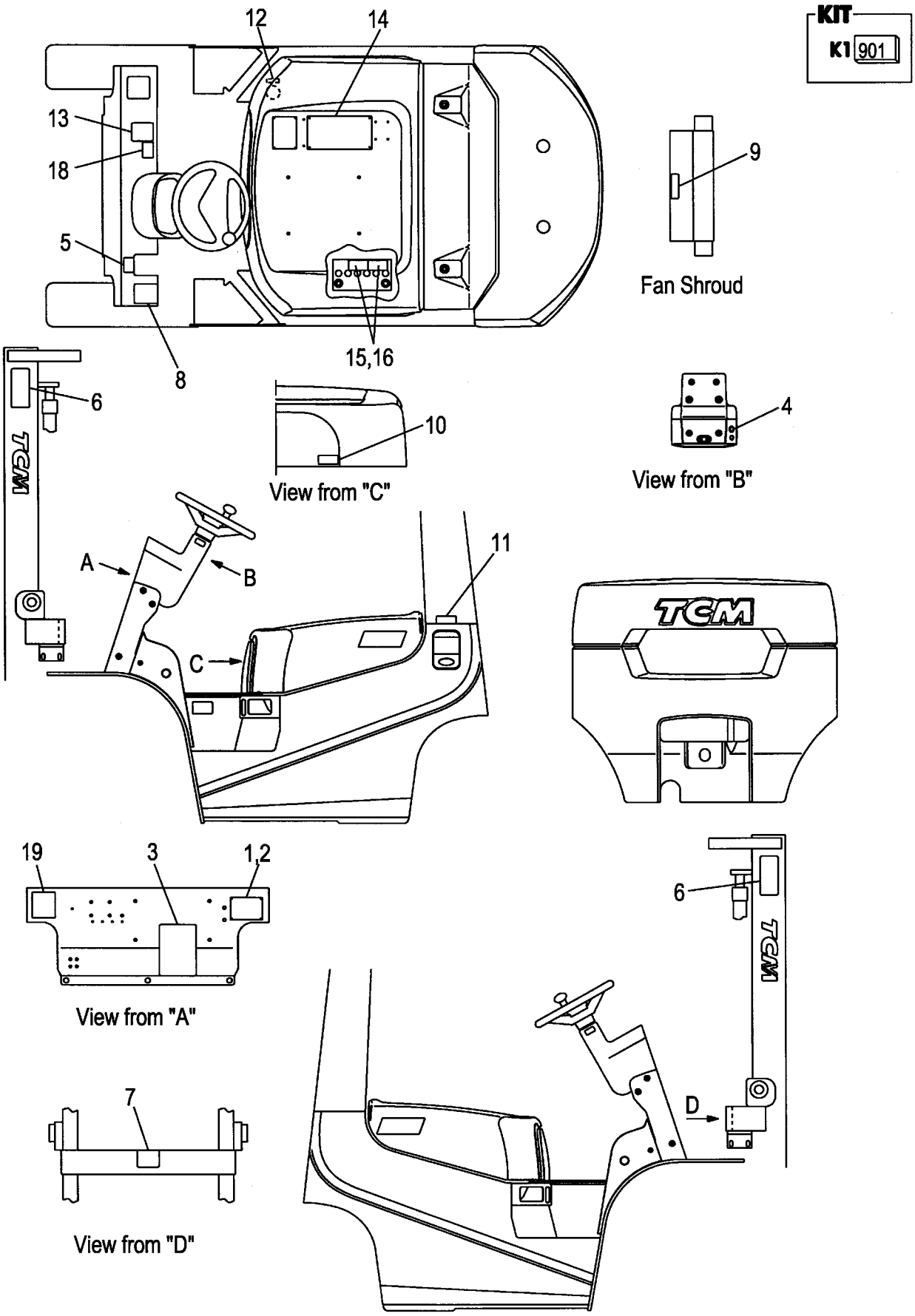

A:FG20C6 FG25C6 C:FD20C6 FD25C6
B:FG20T6 FG25T6 D:FD20T6 FD25T6

Item No	Part No.	Mark	Description		Req'd	Remarks : Serial No.
901	236A9-19811	K1	KIT,DECAL	ﾃﾞｶﾙｷｯﾄ	1	[EXN/ENGLISH]
						INC.3-9,13,14 &FIG.220:4-6
1	NO PART NO.	#	PLATE,NAME	ﾌﾟﾚｰﾄ	1	[EXN/ENGLISH]
-	NO PART NO.	#	PLATE,NAME	ﾌﾟﾚｰﾄ	1	[EXN/DANISH]
-	NO PART NO.	#	PLATE,NAME	ﾌﾟﾚｰﾄ	1	[EXN/SWEDISH]
-	NO PART NO.	#	PLATE,NAME	ﾌﾟﾚｰﾄ	1	[EXN/FINNISH]
2	216G9-12131		RIVET	ﾘﾍﾞｯﾄ	4	[EXN]
3	52672-72122	*	CHART,LUBRICATION	ﾁｬｰﾄ	1	[EXN/ENGLISH]
-	522A3-83281		CHART,LUBRICATION	ﾁｬｰﾄ	1	[EXN/DANISH]
-	529F3-82171		CHART,LUBRICATION	ﾁｬｰﾄ	1	[EXN/SWEDISH]
-	529F3-82161		CHART,LUBRICATION	ﾁｬｰﾄ	1	[EXN/FINNISH]
4	216G9-12071		DECAL,STARTER-SWITCH	ﾃﾞｶﾙ	1	[EXN/ENGLISH]
-	516G3-82031		DECAL,STARTER-SWITCH	ﾃﾞｶﾙ	1	[EXN/DANISH]
-	516G3-82071		DECAL,STARTER-SWITCH	ﾃﾞｶﾙ	1	[EXN/SWEDISH]
-	516G3-82061		DECAL,STARTER-SWITCH	ﾃﾞｶﾙ	1	[EXN/FINNISH]
5	514A3-82002	*	DECAL,BRAKE-LEVER	ﾃﾞｶﾙ	1	[EXN/ENGLISH]
-	514A3-82042		DECAL,BRAKE-LEVER	ﾃﾞｶﾙ	1	[EXN/DANISH]
-	529F3-82252		DECAL,BRAKE-LEVER	ﾃﾞｶﾙ	1	[EXN/SWEDISH]
-	529F3-82242		DECAL,BRAKE-LEVER	ﾃﾞｶﾙ	1	[EXN/FINNISH]
6	27419-12061	*	DECAL,MAST-CAUTION	ﾃﾞｶﾙ	2	[EXN]
7	27419-12071	*	DECAL,CROSS-BEAM	ﾃﾞｶﾙ	1	[EXN]
8	516G2-72711	*	DECAL,TIRE-CAUTION	ﾃﾞｶﾙ	1	[EXN/ENGLISH]
-	516G3-82241		DECAL,TIRE-CAUTION	ﾃﾞｶﾙ	1	[EXN/DANISH]
-	516G3-82291		DECAL,TIRE-CAUTION	ﾃﾞｶﾙ	1	[EXN/SWEDISH]
-	516G3-82281		DECAL,TIRE-CAUTION	ﾃﾞｶﾙ	1	[EXN/FINNISH]
9	516G2-72701	*	DECAL,FAN-CAUTION	ﾃﾞｶﾙ	1	[EXN/ENGLISH]
-	516G3-82141		DECAL,FAN-CAUTION	ﾃﾞｶﾙ	1	[EXN/DANISH]
-	516G3-82191		DECAL,FAN-CAUTION	ﾃﾞｶﾙ	1	[EXN/SWEDISH]
-	516G3-82181		DECAL,FAN-CAUTION	ﾃﾞｶﾙ	1	[EXN/FINNISH]
10	536G2-82181		DECAL,FUEL-CAPACITY	ﾃﾞｶﾙ	1	[EXN/ENGLISH]
-	536G3-82041		DECAL,FUEL-CAPACITY	ﾃﾞｶﾙ	1	[EXN/DANISH]
-	536G3-82091		DECAL,FUEL-CAPACITY	ﾃﾞｶﾙ	1	[EXN/SWEDISH]
-	536G3-82081		DECAL,FUEL-CAPACITY	ﾃﾞｶﾙ	1	[EXN/FINNISH]
11	51232-82001		DECAL,GASOLINE	ﾃﾞｶﾙ	1	A,B
						[EXN/ENGLISH]
-	522A2-72111		DECAL,LIGHT-OIL	ﾃﾞｶﾙ	1	C,D
						[EXN/ENGLISH]
-	51233-83221		DECAL,GASOLINE	ﾃﾞｶﾙ	1	A,B
						[EXN/DANISH]
-	522A3-83221		DECAL,LIGHT-OIL	ﾃﾞｶﾙ	1	C,D
						[EXN/DANISH]
-	528F3-82031		DECAL,GASOLINE	ﾃﾞｶﾙ	1	A,B
						[EXN/SWEDISH]
-	529F3-82051		DECAL,LIGHT-OIL	ﾃﾞｶﾙ	1	C,D
						[EXN/SWEDISH]
-	528F3-82021		DECAL,GASOLINE	ﾃﾞｶﾙ	1	A,B
						[EXN/FINNISH]
-	529F3-82041		DECAL,LIGHT-OIL	ﾃﾞｶﾙ	1	C,D
						[EXN/FINNISH]
12	522A3-83061		DECAL,OIL	ﾃﾞｶﾙ	1	[EXN/DANISH]

FIG.226 DECAL (2/2)[EXN]

(F50291N0) ﾃﾞｶﾙ(2/2)

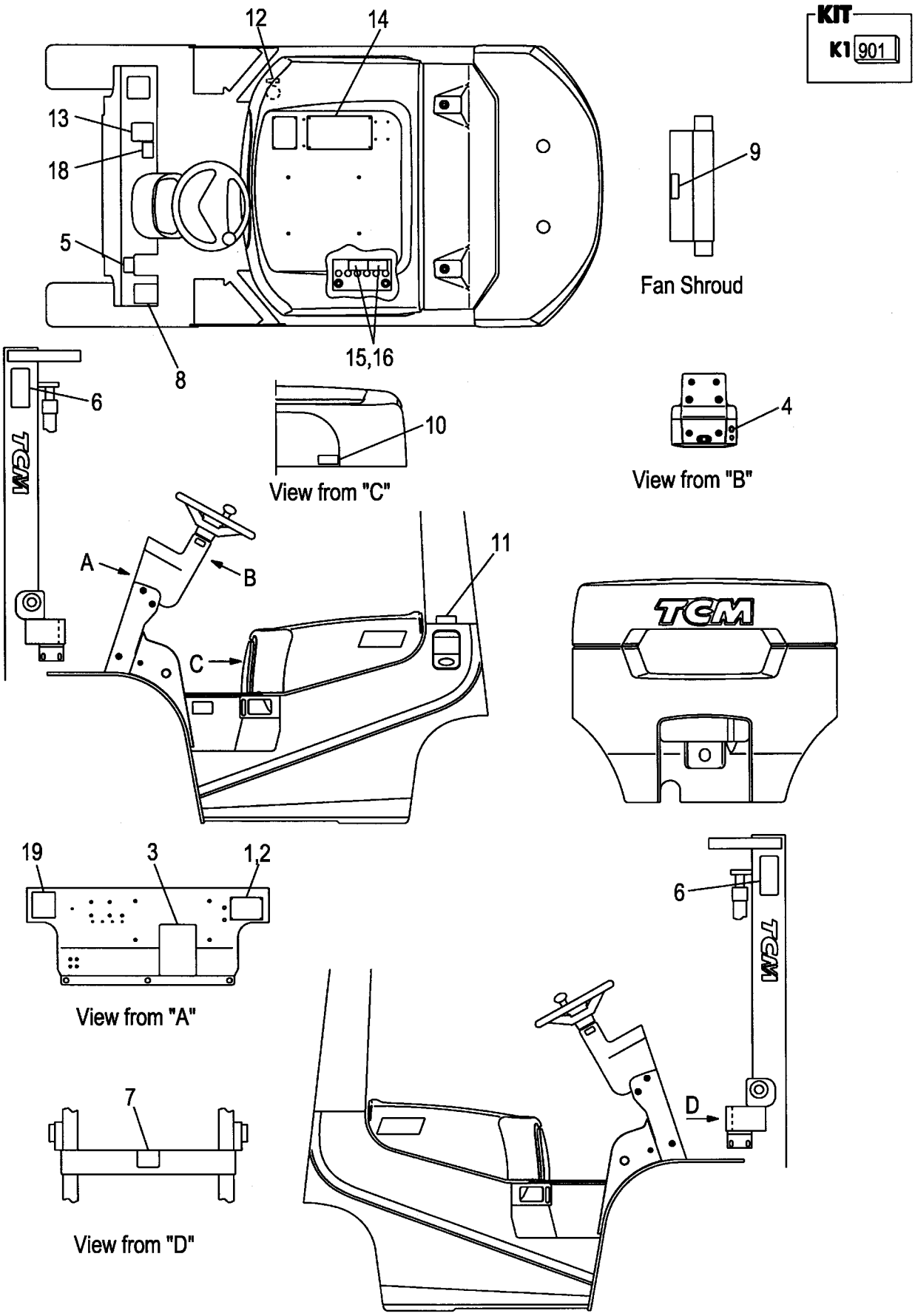

A:FG20C6 FG25C6 C:FD20C6 FD25C6
B:FG20T6 FG25T6 D:FD20T6 FD25T6

Item No	Part No.	Mark	Description	Req'd	Remarks : Serial No.
-	529F3-82071		DECAL,OIL デカル	1	[EXN/SWEDISH]
-	529F3-82061		DECAL,OIL デカル	1	[EXN/FINNISH]
13	571A3-82361	*	DECAL,CAUTION デカル	1	[EXN]
14	516G3-82801	*	DECAL,CAUTION デカル	1	[EXN/ENGLISH]
-	516G3-82851		DECAL,CAUTION デカル	1	[EXN/DANISH]
-	516G3-82891		DECAL,CAUTION デカル	1	[EXN/SWEDISH]
-	516G3-82901		DECAL,CAUTION デカル	1	[EXN/FINNISH]
15	534A3-82311		DECAL,BATTERY,A デカル	1	[EXN/ENGLISH]
-	534A3-82361		DECAL,BATTERY,A デカル	1	[EXN/DANISH]
-	534A3-82411		DECAL,BATTERY,A デカル	1	[EXN/SWEDISH]
-	534A3-82401		DECAL,BATTERY,A デカル	1	[EXN/FINNISH]
16	534A3-82421		DECAL,BATTERY,B デカル	1	[EXN/ENGLISH]
-	534A3-82471		DECAL,BATTERY,B デカル	1	[EXN/DANISH]
-	534A3-82521		DECAL,BATTERY,B デカル	1	[EXN/SWEDISH]
-	534A3-82511		DECAL,BATTERY,B デカル	1	[EXN/FINNISH]
17	55592-82001	+	DECAL,CERTIFICATE デカル	1	[EXN]
18	535H3-82411		DECAL,CREEP-CAUTION デカル	1	B,D [EXN/ENGLISH]
-	535H3-82461		DECAL,CREEP-CAUTION デカル	1	B,D [EXN/DANISH]
-	535H3-82511		DECAL,CREEP-CAUTION デカル	1	B,D [EXN/SWEDISH]
-	535H3-82501		DECAL,CREEP-CAUTION デカル	1	B,D [EXN/FINNISH]
19	535E3-82241		DECAL,EC-SOUND デカル	1	A,B:66039- [EXN]
-	535E3-82231		DECAL,EC-SOUND デカル	1	C,D:83854- [EXN]

FIG.227 SERVICE TOOL [TO][EX]

(F5029210) サービスツール

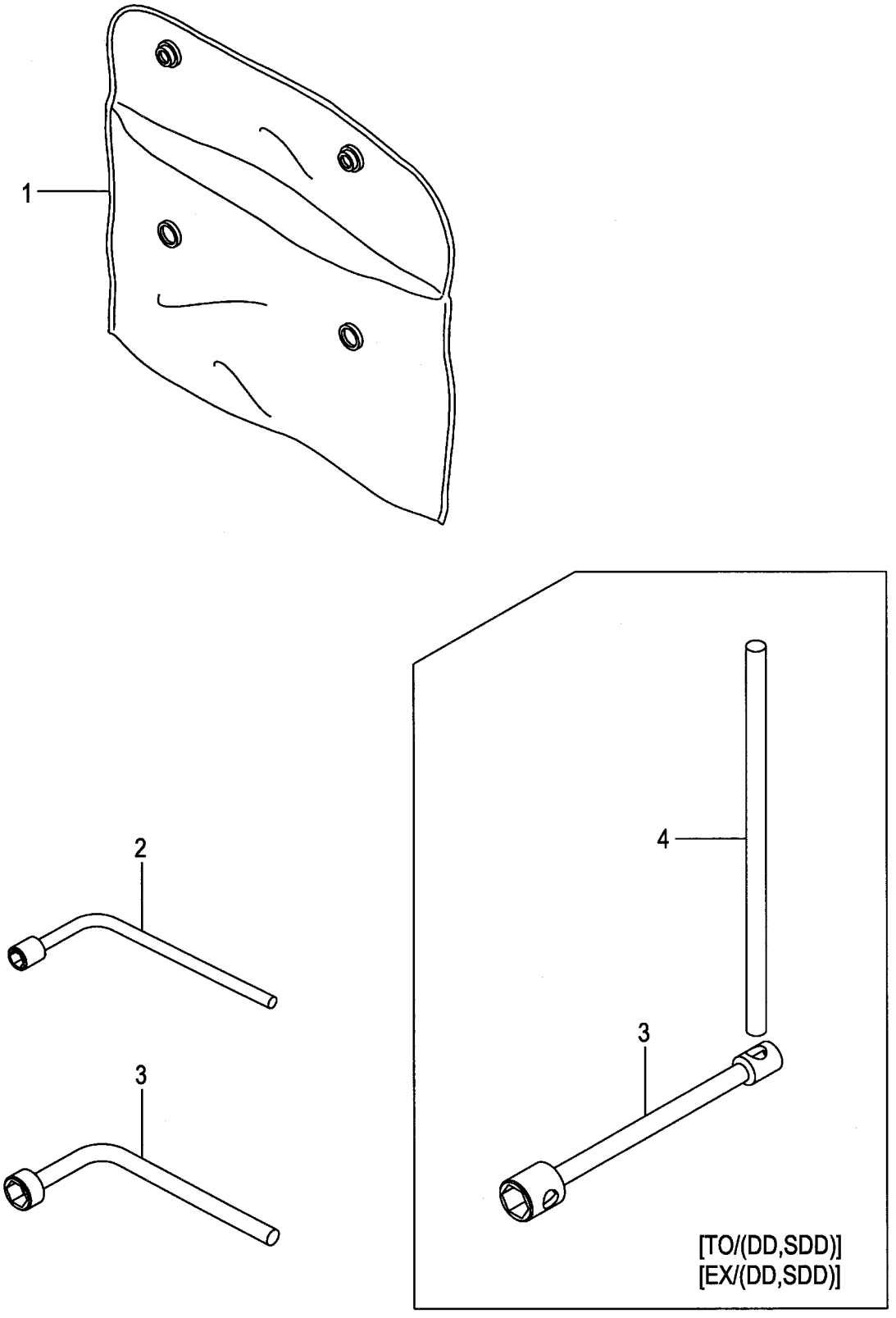

A:FG20C17 FG20T17 FG25C17 FG25T17 D:FD20C17 FD20T17 FD25C17 FD25T17
B:FG20C6 FG20T6 FG25C6 FG25T6 E:FD20C6 FD20T6 FD25C6 FD25T6
C:FG20W6 FG25W6 F:FD20W6 FD25W6

FIG.227
(F5029210)

Item No	Part No.	Mark	Description	Req'd	Remarks : Serial No.
1	214A9-20101		SACK,SERVICE-TOOLS サック	1	[TO]
-	214A9-20101		SACK,SERVICE-TOOLS サック	1	B,E
					[EX](WITHOUT TOZZZ/EX)
2	22199-22251		WRENCH,HUB-NUT,21MM レンチ	1	[TO](REAR)
-	22199-22251		WRENCH,HUB-NUT,21MM レンチ	1	B,E
					[EX](WITHOUT TOZZZ/EX)(REAR)
3	25599-22001		WRENCH,HUB-NUT,32MM レンチ	1	[TO](FRONT)
-	25599-22001		WRENCH,HUB-NUT,32MM レンチ	1	B,E
					[EX](WITHOUT TOZZZ/EX)(FRONT)
-	23819-20011		WRENCH,HUB-NUT,41MM レンチ	1	[TO/DD][TO/SDD](FRONT)
-	23819-20011		WRENCH,HUB-NUT,41MM レンチ	1	B,E
					[EX/DD][EX/SDD](FRONT)
4	23819-20021		LEVER,WRENCH,HUB-NUT レバー	1	[TO/DD][TO/SDD]
-	23819-20021		LEVER,WRENCH,HUB-NUT レバー	1	B,E
					[EX/DD][EX/SDD]

FIG.228 LPG KIT [LPG]

(F5029340) LPGキット

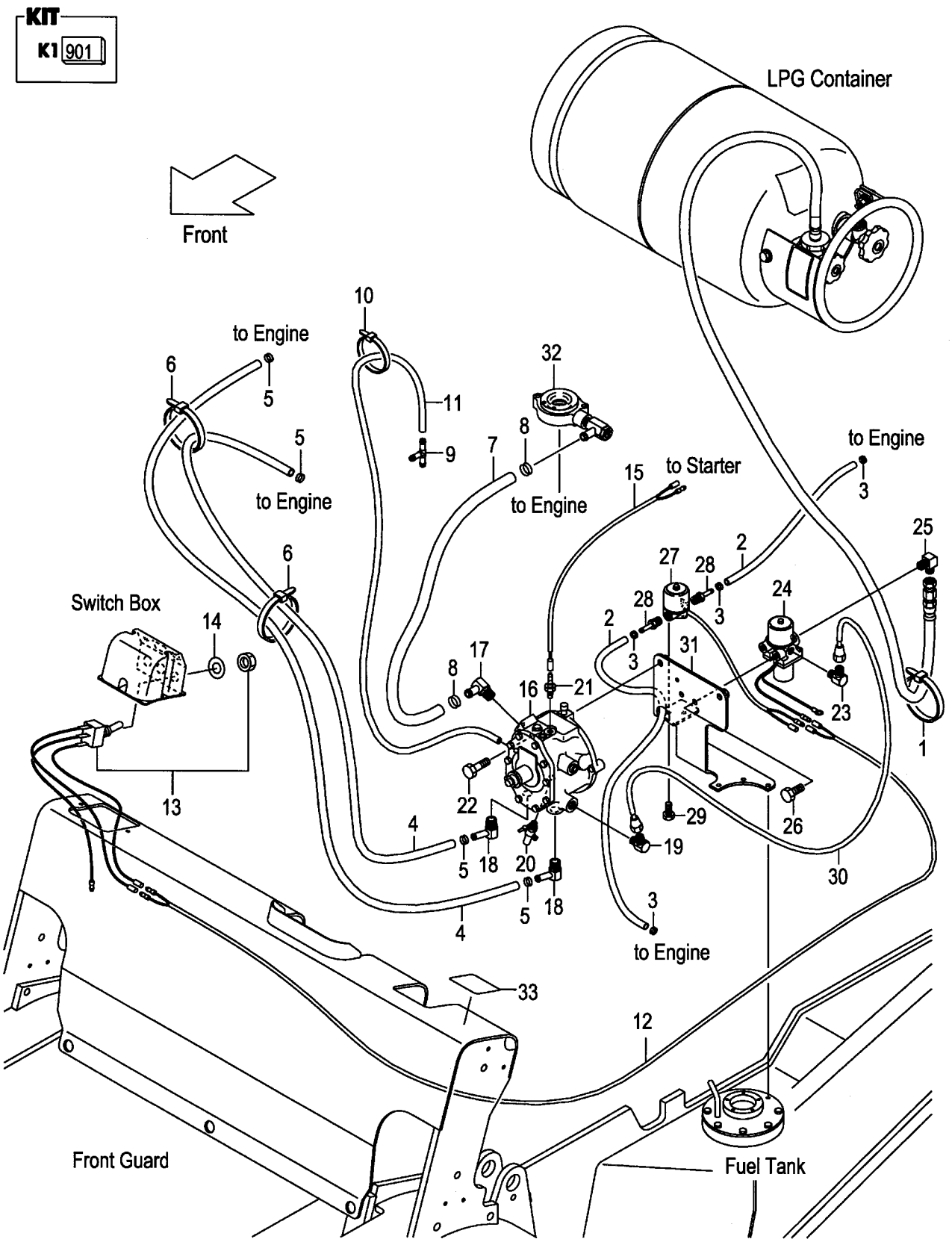

A:FG20C17 FG20T17 FG25C17 FG25T17
B:FG20C6 FG20T6 FG25C6 FG25T6
C:FG20W6 FG25W6

FIG.228
(F5029340)

Item No	Part No.	Mark	Description		Req'd	Remarks : Serial No.
901	518G0-50401	K1	KIT,LPG-18G	LPGｷｯﾄ	1	[LPG] INC.1-32
1	04913-10300	*	BAND	ﾊﾞﾝﾄﾞ	2	[LPG]
2	531A0-52061	*	HOSE,GASOLINE	ﾎｰｽ	2	A:1-11013 B,C:1-65246 [LPG]
-	518G0-50421	*	HOSE,GASOLINE	ﾎｰｽ	2	A:11014- B,C:65247- [LPG]
3	04912-00000	*	CLIP	ｸﾘｯﾌﾟ	4	[LPG]
4	528F0-52011	*	HOSE,WATER	ﾎｰｽ	2	[LPG]
5	04911-00016	*	CLIP	ｸﾘｯﾌﾟ	4	[LPG]
6	04913-10200	*	BAND	ﾊﾞﾝﾄﾞ	2	[LPG]
7	531A0-52601	*	HOSE,GAS	ﾎｰｽ	1	[LPG]
8	04911-00022	*	CLIP	ｸﾘｯﾌﾟ	2	[LPG]
9	51230-52141	*	JOINT	ｼﾞｮｲﾝﾄ	1	[LPG]
10	04913-10100	*	BAND	ﾊﾞﾝﾄﾞ	2	[LPG]
11	51230-52051	*	HOSE,VACUUM	ﾎｰｽ	1	[LPG]
12	531A0-52621	*	WIRE-HARNESS,SWITCH	ﾜｲﾔﾊｰﾈｽ	1	[LPG]
13	51230-52101	*	SWITCH	ｽｲｯﾁ	1	[LPG]
14	51230-52121	*	LABEL,SWITCH	ﾗﾍﾞﾙ	1	[LPG]
15	531A0-52611	*	WIRE-HARNESS,SOL	ﾜｲﾔﾊｰﾈｽ	1	[LPG]
A1	531A0-50151		UNIT-ASSY,VAPORIZER	ﾍﾞｰﾎﾟﾗｲｻﾞﾕﾆｯﾄｱｯｾﾝ	1	[LPG] INC.16-31
A2	531A0-50121		VAPORIZER-ASSY	ﾍﾞｰﾎﾟﾗｲｻﾞｱｯｾﾝ	1	[LPG] INC.16-21
16	531A0-52661	*	VAPORIZER	ﾍﾞｰﾎﾟﾗｲｻﾞ	1	[LPG]
17	531A0-52631	*	ELBOW,GAS	ｴﾙﾎﾞ	1	[LPG]
18	51230-52301	*	ELBOW,WATER	ｴﾙﾎﾞ	2	[LPG]
19	51230-52311	*	ELBOW,LPG	ｴﾙﾎﾞ	1	[LPG]
20	51230-52321	*	COCK,DRAIN	ｺｯｸ	1	[LPG]
21	531A0-52651	*	SOLENOID,STARTER	ｿﾚﾉｲﾄﾞ	1	[LPG]
22	01183-08045	*	BOLT	ﾎﾞﾙﾄ	2	[LPG]
A3	531A0-50111		SOLENOID-ASSY	ｿﾚﾉｲﾄﾞｱｯｾﾝ	1	[LPG] INC.23-25
23	51230-52311	*	ELBOW,LPG	ｴﾙﾎﾞ	1	[LPG]
24	531A0-52641	*	SOLENOID,LPG	ｿﾚﾉｲﾄﾞ	1	[LPG]
25	531A0-52041	*	JOINT,FLARE	ｼﾞｮｲﾝﾄ	1	[LPG]
26	01183-08020	*	BOLT	ﾎﾞﾙﾄ	2	[LPG]
A4	51230-50271		SOLENOID-ASSY	ｿﾚﾉｲﾄﾞｱｯｾﾝ	1	[LPG] INC.27,28
27	53450-53171	*	SOLENOID,GASOLINE	ｿﾚﾉｲﾄﾞ	1	[LPG]
28	53450-53161	*	NIPPLE	ﾆｯﾌﾟﾙ	2	[LPG]
29	01183-06010	*	BOLT	ﾎﾞﾙﾄ	2	[LPG]
30	51230-52071	*	TUBE	ﾁｭｰﾌﾞ	1	[LPG]
31	518G0-52001	*	BRACKET,VAPORIZER	ﾌﾞﾗｹｯﾄ	1	[LPG]
32	531A0-50161	*	ADAPTER	ｱﾀﾞﾌﾟﾀ	1	[LPG]
33	51230-52171		DECAL,CAUTION	ﾃﾞｶﾙ	1	[LPG]
-	51230-52331		DECAL,CAUTION	ﾃﾞｶﾙ	1	B [LPG/EX]

FIG.229 LPG WARNING LIGHT [LPG/LPGL] & WARNING BUZZER [LPG/LPGB]

(F5029350) LPGﾜｰﾆﾝｸﾞﾗｲﾄ&ﾜｰﾆﾝｸﾞﾌﾞｻﾞｰ

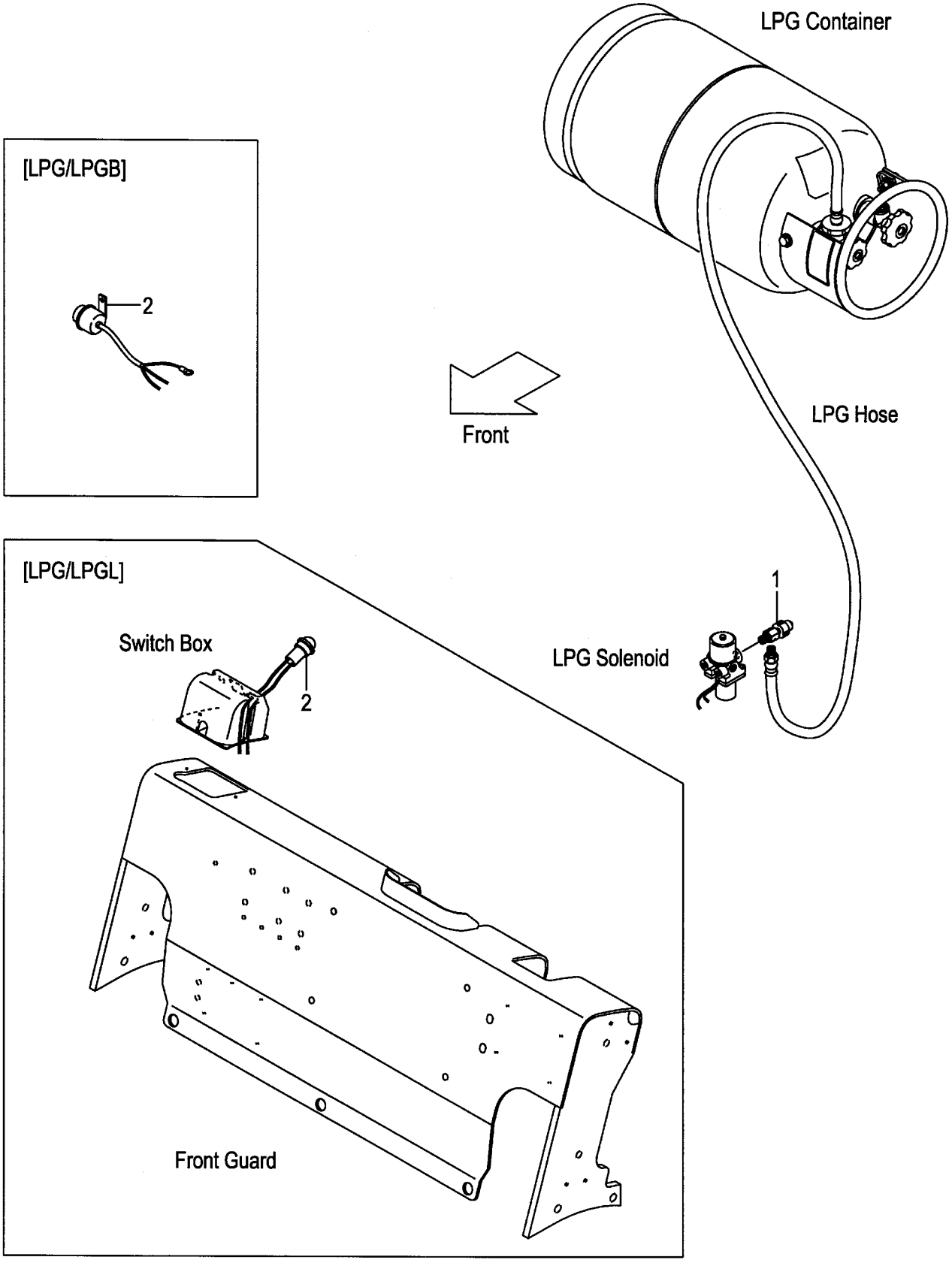

A:FG20C17 FG20T17 FG25C17 FG25T17
B:FG20C6 FG20T6 FG25C6 FG25T6 FG20W6 FG25W6

Item No	Part No.	Mark	Description		Req'd	Remarks : Serial No.
A1	531A0-50131		LAMP-ASSY,WARNING	ﾜｰﾆﾝｸﾞﾗﾝﾌﾟｱｯｾﾝ	1	[LPG/LPGL] INC.1,2
-	531A0-50141		BUZZER-ASSY,WARNING	ﾌﾞｻﾞｰｱｯｾﾝ	1	[LPG/LPGB] INC.1,2
1	531A0-52091		SENSOR	ｾﾝｻ	1	[LPG/LPGL][LPG/LPGB]
2	531A0-52321		LAMP	ﾗﾝﾌﾟ	1	[LPG/LPGL]
-	513A0-52331		BUZZER	ﾌﾞｻﾞｰ	1	[LPG/LPGB]

FIG.230 BOMBE [LPG][LPO][LPS][EECLP]

(F5029360) ﾎﾞﾝﾍﾞ

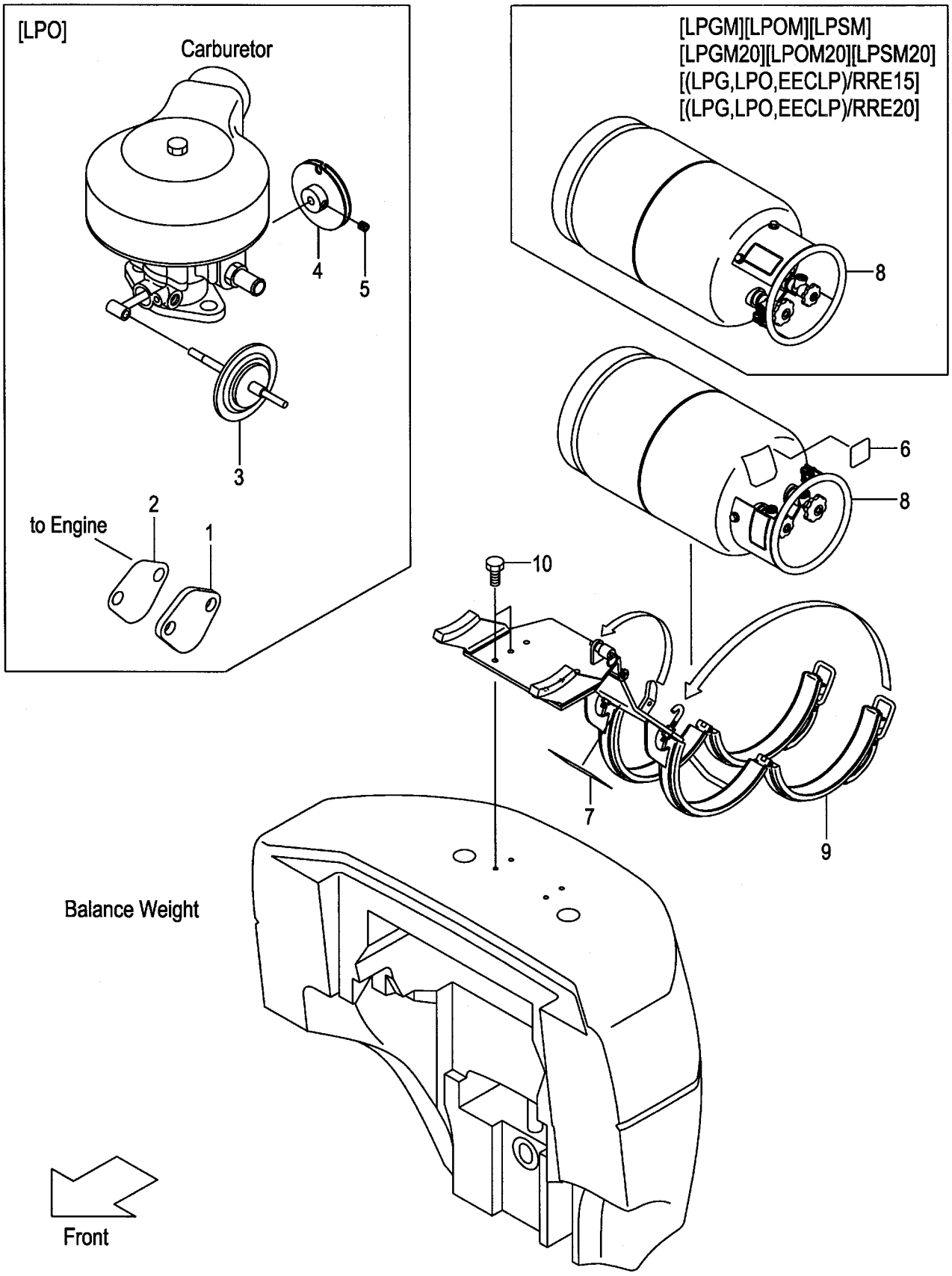

A:FG20C17 FG20T17 FG25C17 FG25T17
B:FG20C6 FG20T6 FG25C6 FG25T6
C:FG20W6 FG25W6

FIG.230
(F5029360)

Item No	Part No.	Mark	Description		Req'd	Remarks : Serial No.
1	53320-52331		PLATE	ﾌﾟﾚｰﾄ	1	[LPO]
2	53320-52322		GASKET	ｶﾞｽｹｯﾄ	1	[LPO]
3	528F0-52071		DIAPHRAGM	ﾀﾞｲﾔﾌﾗﾑ	1	[LPO]
4	54280-52011		ARM,THROTTLE	ｱｰﾑ	1	[LPO]
5	01066-06008		SCREW,SET	ｽｸﾘｭｾｯﾄ	1	[LPO]
6	53030-52321		DECAL	ﾃﾞｶﾙ	1	[LPG][EECLP]
-	53030-52321		DECAL	ﾃﾞｶﾙ	1	[LPO]
7	513A0-52342		DECAL,LPG-CAUTION	ﾃﾞｶﾙ	1	[LPG][EECLP]
-	513A0-52342		DECAL,LPG-CAUTION	ﾃﾞｶﾙ	1	[LPO]
-	55530-52101		DECAL,LPG-CAUTION	ﾃﾞｶﾙ	1	B [LPG/EX][EECLP/EX]
-	55530-52101		DECAL,LPG-CAUTION	ﾃﾞｶﾙ	1	B [LPO/EX]
8	52430-52552		CONTAINER,LPG,15KG	ｺﾝﾃﾅ	1	[LPG][LPO][LPS][EECLP] (WITHOUT LPG&LPO&EECLP/EX)
-	533B0-52001		CONTAINER,LPG,15KG	ｺﾝﾃﾅ	1	[LPGM][LPOM][LPSM]
-	533B0-52001		CONTAINER,LPG,15KG	ｺﾝﾃﾅ	1	[LPG/RRE15][LPO/RRE15] [EECLP/RRE15]
-	521A0-52102		CONTAINER,LPG,20KG	ｺﾝﾃﾅ	1	[LPG20][LPO20][LPS20]
-	533B0-52011		CONTAINER,LPG,20KG	ｺﾝﾃﾅ	1	[LPGM20][LPOM20][LPSM20]
-	533B0-52011		CONTAINER,LPG,20KG	ｺﾝﾃﾅ	1	[LPG/RRE20][LPO/RRE20] [EECLP/RRE20]
9	518G0-52101		BRACKET,LPG-BOMBE	ﾌﾞﾗｹｯﾄ	1	[LPG][LPO][EECLP] (WITHOUT LPG&LPO&EECLP/EX)
10	01186-10035		BOLT	ﾎﾞﾙﾄ	4	[LPG][LPO][EECLP] (WITHOUT LPG&LPO&EECLP/EX)

FIG.231 LPG HOSE [LPG][EECLP]

(F5029370) **LPGホース**

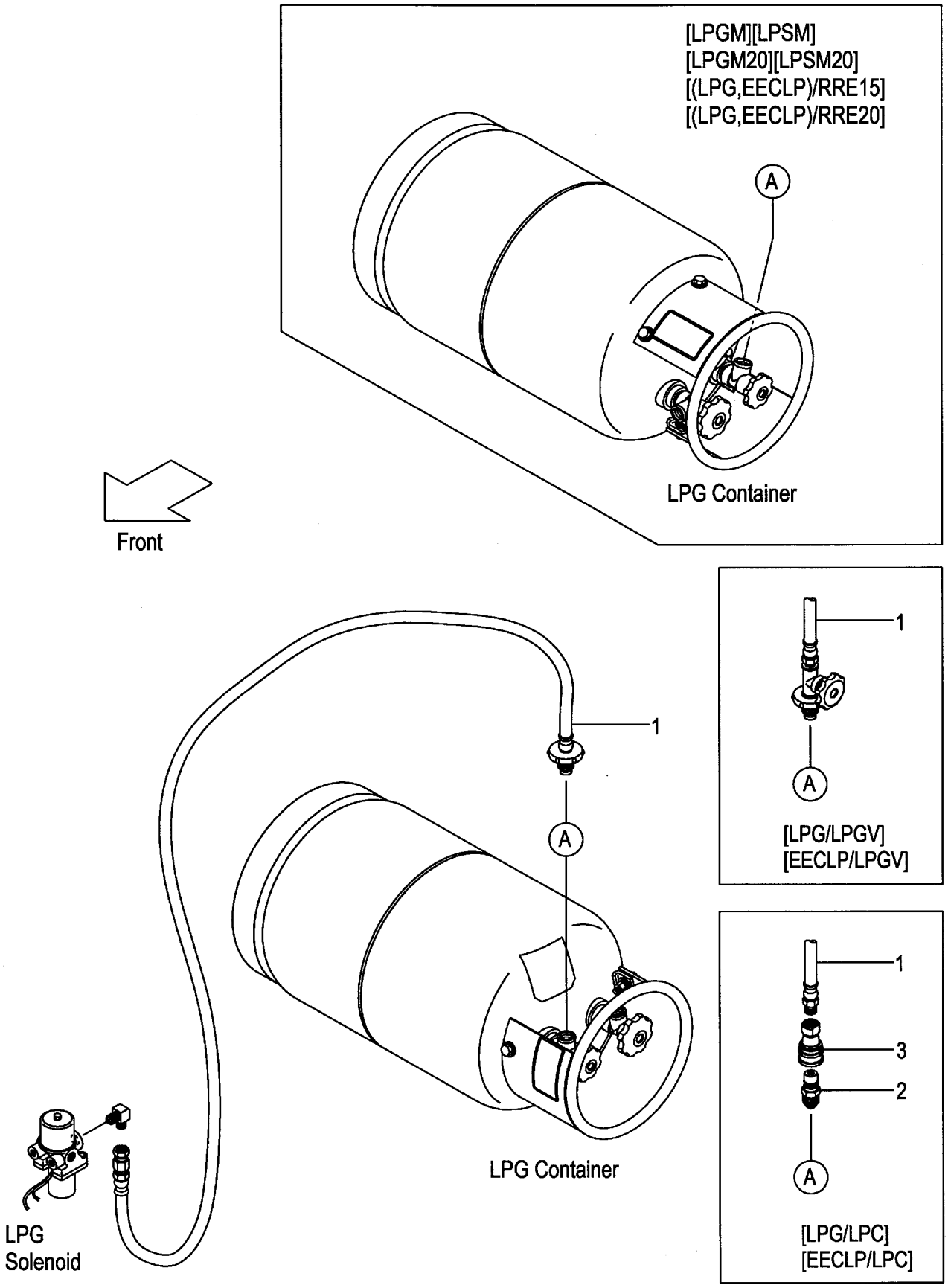

A:FG20C17 FG20T17 FG25C17 FG25T17
B:FG20C6 FG20T6 FG25C6 FG25T6 FG20W6 FG25W6

Item No	Part No.	Mark	Description		Req'd	Remarks : Serial No.
1	518G0-52031		HOSE	ホース	1	[LPG][EECLP]
-	518G0-52071		HOSE	ホース	1	[LPG/LPGV][EECLP/LPGV]
-	518G0-52081		HOSE	ホース	1	[LPG/LPC][EECLP/LPC]
2	55530-52211		PLUG,ONE-TOUCH	ﾌﾟﾗｸﾞ	1	[LPG/LPC][EECLP/LPC]
3	55530-52221		SOCKET,ONE-TOUCH	ｿｹｯﾄ	1	[LPG/LPC][EECLP/LPC]

FIG.232 LPO KIT [LPO]

(F5029380) LPOキット

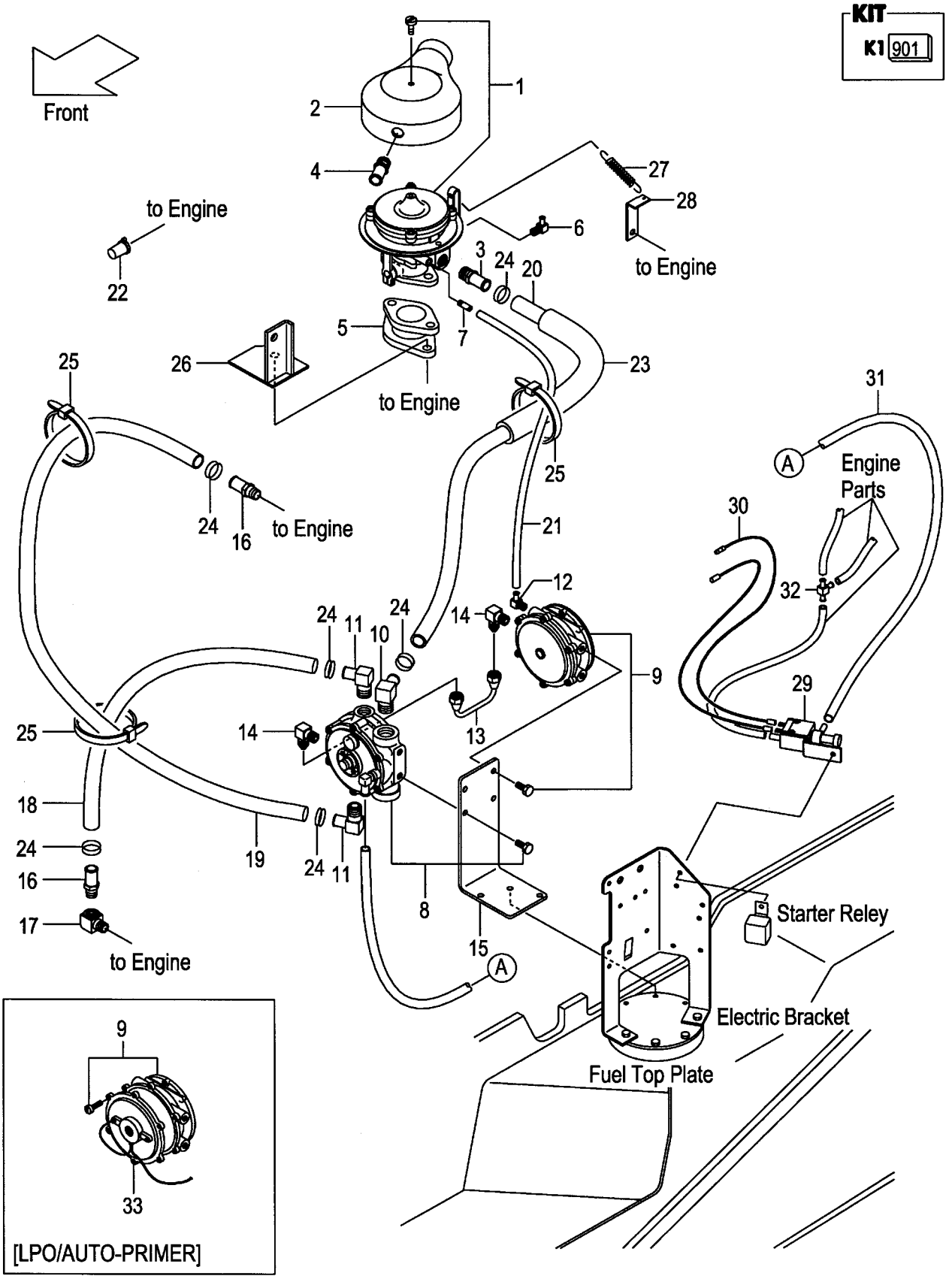

A:FG20C17 FG20T17 FG25C17 FG25T17
B:FG20C6 FG20T6 FG25C6 FG25T6 FG20W6 FG25W6

Item No	Part No.	Mark	Description		Req'd	Remarks : Serial No.
901	518G0-50301	K1	KIT,LPO,H15	LPOｷｯﾄ	1	A [LPO] INC.1-33
-	536F0-50301	K1	KIT,LPO,H20	LPOｷｯﾄ	1	B [LPO] INC.1-33
1	520A0-52201	*	CARBURETOR,H15	ｷｬﾌﾞﾚﾀ	1	A [LPO]SEE FIG.235
-	526A0-52201	*	CARBURETOR,H20	ｷｬﾌﾞﾚﾀ	1	B [LPO]SEE FIG.235
2	533A0-52131	*	HORN,AIR	ﾎｰﾝ	1	[LPO]
3	521B0-52011	*	NIPPLE	ﾆｯﾌﾟﾙ	1	[LPO]
4	521B0-52012	*	NIPPLE	ﾆｯﾌﾟﾙ	1	[LPO]
5	528F0-52211	*	ADAPTER	ｱﾀﾞﾌﾟﾀ	1	[LPO]
6	52050-53021	*	ELBOW	ｴﾙﾎﾞ	1	[LPO]
7	51240-52021	*	NIPPLE	ﾆｯﾌﾟﾙ	1	[LPO]
8	528F0-52221	*	CONVERTER,KB	ｺﾝﾊﾞｰﾀ	1	[LPO]SEE FIG.236
9	53320-50401	*	FILTER,FUEL-LOCK	ﾌｨﾙﾀ	1	[LPO]SEE FIG.237
10	54240-52021	*	ELBOW	ｴﾙﾎﾞ	1	[LPO]
11	528F0-52461	*	ELBOW	ｴﾙﾎﾞ	2	[LPO]
12	52050-53021	*	ELBOW	ｴﾙﾎﾞ	1	[LPO]
13	52050-53011	*	TUBE	ﾁｭｰﾌﾞ	1	[LPO]
14	52050-53001	*	ELBOW	ｴﾙﾎﾞ	2	[LPO]
15	537A0-52101	*	BRACKET,CONVERTER	ﾌﾞﾗｹｯﾄ	1	[LPO]
16	528F0-52431	*	NIPPLE	ﾆｯﾌﾟﾙ	2	[LPO]
17	528F0-52441	*	ELBOW,JOINT	ｴﾙﾎﾞ	1	[LPO]
18	513B0-52011	*	HOSE,WATER	ﾎｰｽ	1	[LPO]
19	533A0-52111	*	HOSE,WATER	ﾎｰｽ	1	[LPO]
20	533A0-52151	*	HOSE,GAS	ﾎｰｽ	1	[LPO]
21	513B0-52061	*	HOSE,VACUUM	ﾎｰｽ	1	[LPO]
22	528F0-52451	*	CAP	ｷｬｯﾌﾟ	2	[LPO]
23	528F0-52341	*	PROTECTOR	ﾌﾟﾛﾃｸﾀ	1	[LPO]
24	04911-00022	*	CLIP	ｸﾘｯﾌﾟ	6	[LPO]
25	04913-10200	*	BAND	ﾊﾞﾝﾄﾞ	4	[LPO]
26	528F0-52351	*	BRACKET,IDLE-UP	ﾌﾞﾗｹｯﾄ	1	[LPO]
27	528F0-52311	*	SPRING,RETURN	ｽﾌﾟﾘﾝｸﾞ	1	[LPO]
28	528F0-52331	*	BRACKET,SPRING	ﾌﾞﾗｹｯﾄ	1	[LPO]
29	533A0-52301	*	VALVE,SOLENOID	ﾊﾞﾙﾌﾞ	1	[LPO]
30	533A0-52311	*	WIRE,LEAD	ﾜｲﾔ	1	[LPO]
31	533A0-52331	*	HOSE,VACUUM	ﾎｰｽ	1	[LPO]
32	533A0-52341	*	THREE-WAY	ｽﾘｰｳｴｲ	1	[LPO]
33	51240-52431	*	DISK,AUTO-PRIMER	ﾃﾞｨｽｸ	1	[LPO/AUTO-PRIMER]

FIG.233 LPO WARNING BUZZER [LPO/LPGB]

(F5029390) LPOﾜｰﾆﾝｸﾞﾌﾞｻﾞｰ

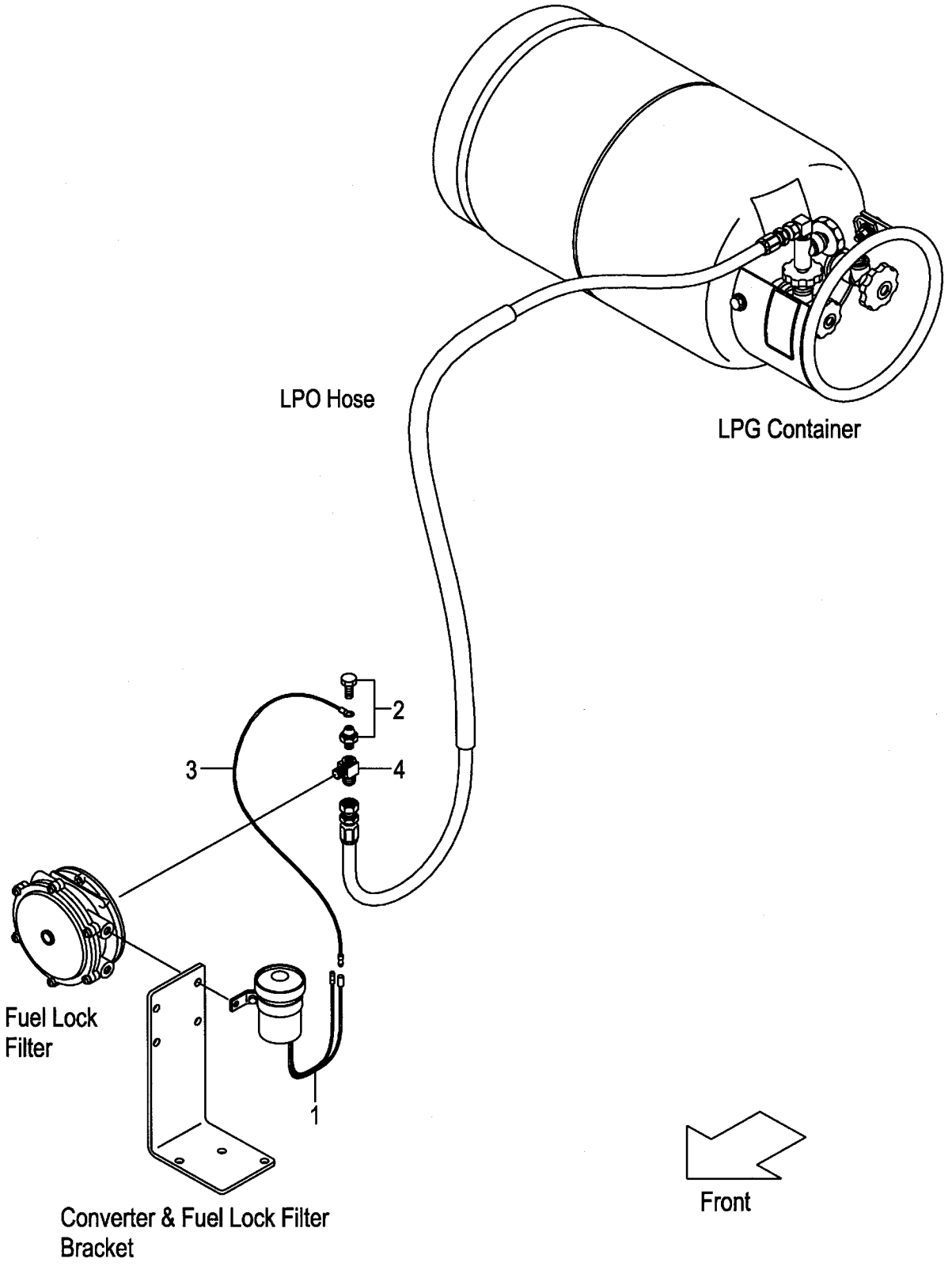

A:FG20C17 FG20T17 FG25C17 FG25T17
B:FG20C6 FG20T6 FG25C6 FG25T6 FG20W6 FG25W6

Item No	Part No.	Mark	Description		Req'd	Remarks : Serial No.
A1	533A0-50351		BUZZER-ASSY,WARNING	ﾌﾞｻﾞｰｱｯｾﾝ	1	[LPO/LPGB] INC.1-4
1	51240-52441		BUZZER,ALARM	ﾌﾞｻﾞｰ	1	[LPO/LPGB]
2	51240-52451		SWITCH,PRESSURE	ｽｲｯﾁ	1	[LPO/LPGB]
3	51240-52491		WIRE-HARNESS	ﾜｲﾔﾊｰﾈｽ	1	[LPO/LPGB]
4	533A0-52141		ELBOW	ｴﾙﾎﾞ	1	[LPO/LPGB]

FIG.234 LPO HOSE [LPO]

(F50293A0) LPOホース

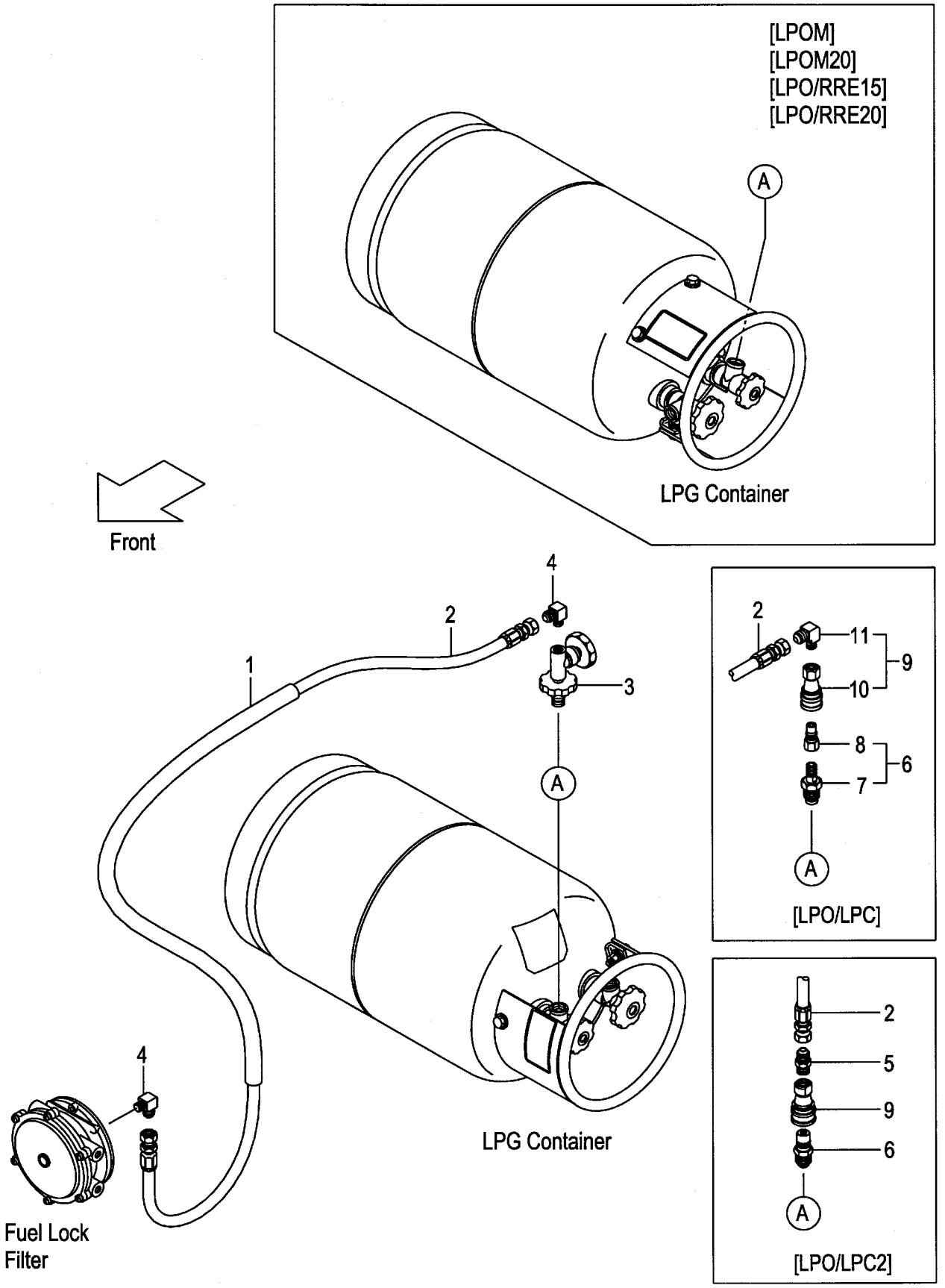

A:FG20C17 FG20T17 FG25C17 FG25T17
B:FG20C6 FG20T6 FG25C6 FG25T6
C:FG20W6 FG25W6

FIG.234
(F50293A0)

Item No	Part No.	Mark	Description		Req'd	Remarks : Serial No.
A1	537A0-50321		HOSE-ASSY,HP	ﾎｰｽｱｯｾﾝ	1	A:1-11059 B,C:1-66736 [LPO](WITHOUT LPO/EX) INC.1-4
-	537A0-50322		HOSE-ASSY,HP	ﾎｰｽｱｯｾﾝ	1	A:11060- B,C:66737- [LPO](WITHOUT LPO/EX) INC.1-4
-	537A0-50331		HOSE-ASSY,HP	ﾎｰｽｱｯｾﾝ	1	A:1-11059 B,C:1-66736 [LPO/LPC] INC.1,2,4,6-11
-	537A0-50332		HOSE-ASSY,HP	ﾎｰｽｱｯｾﾝ	1	A:11060- B,C:66737- [LPO/LPC] INC.1,2,4,6-11
-	537A0-50341		HOSE-ASSY,HP	ﾎｰｽｱｯｾﾝ	1	A:1-11059 B,C:1-66736 [LPO/LPC2] INC.1,2,4-6,9
-	537A0-50342		HOSE-ASSY,HP	ﾎｰｽｱｯｾﾝ	1	A:11060- B,C:66737- [LPO/LPC2] INC.1,2,4-6,9
1	533A0-52121		HOSE,VINYL	ﾎｰｽ	1	A:1-11059 B,C:1-66736 [LPO](WITHOUT LPO/EX)
-	537A0-52121		HOSE,VINYL	ﾎｰｽ	1	A:11060- B,C:66737- [LPO](WITHOUT LPO/EX)
2	537A0-50361		HOSE	ﾎｰｽ	1	[LPO](WITHOUT LPO/EX)
3	51240-52481		VALVE,STOP	ﾊﾞﾙﾌﾞ	1	[LPO] (WITHOUT LPO/LPC&LPC2&EX)
4	51240-52151		ELBOW	ｴﾙﾎﾞ	2	[LPO](WITHOUT LPO/LPGB&EX)
-	51240-52151		ELBOW	ｴﾙﾎﾞ	1	[LPO/LPC][LPO/LPC2]
5	513B0-52161		NIPPLE,FLARE	ﾆｯﾌﾟﾙ	1	[LPO/LPC2]
6	51240-52411		PLUG,ONE-TOUCH	ﾌﾟﾗｸﾞ	1	[LPO/LPC] INC.7,8
-	55530-52211		PLUG,ONE-TOUCH	ﾌﾟﾗｸﾞ	1	[LPO/LPC2]
7	51240-52521		ADAPTER,BOMBE	ｱﾀﾞﾌﾟﾀ	1	[LPO/LPC]
8	51240-52531		PLUG	ﾌﾟﾗｸﾞ	1	[LPO/LPC]
9	51240-52421		SOCKET,ONE-TOUCH	ｿｹｯﾄ	1	[LPO/LPC] INC.10,11
-	55530-52221		SOCKET,ONE-TOUCH	ｿｹｯﾄ	1	[LPO/LPC2]
10	51240-52511		SOCKET	ｿｹｯﾄ	1	[LPO/LPC]
11	51240-52501		ELBOW	ｴﾙﾎﾞ	1	[LPO/LPC]

FIG.235 CARBURETOR [LPO]

(F50293B0) キャブレタ

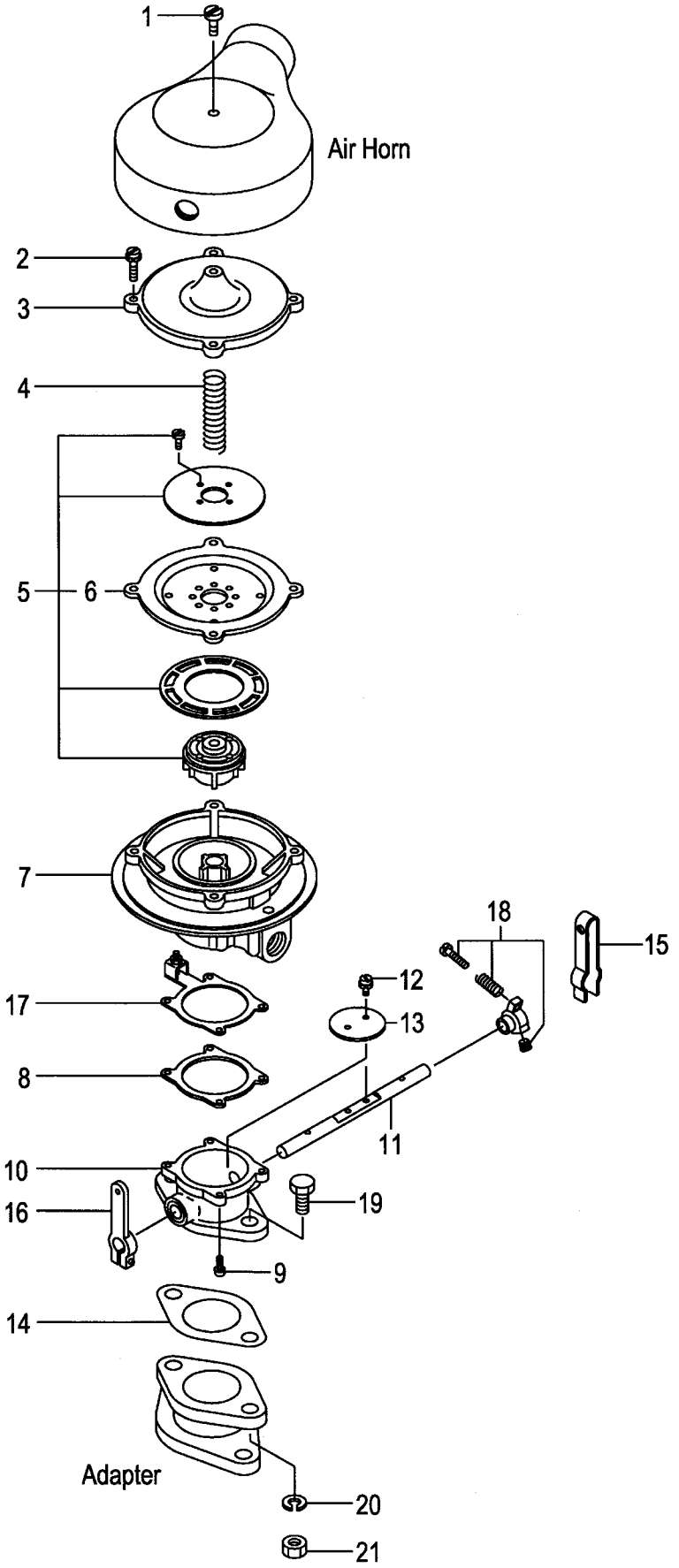

A:FG20C17 FG20T17 FG25C17 FG25T17
B:FG20C6 FG20T6 FG25C6 FG25T6
C:FG20W6 FG25W6

FIG.235
(F50293B0)

Item No	Part No.	Mark	Description		Req'd	Remarks : Serial No.
A1	520A0-52201		CARBURETOR-ASSY,H15	ｷｬﾌﾞﾚﾀｱｯｾﾝ	1	A [LPO] INC.1-21
-	526A0-52201		CARBURETOR-ASSY,H20	ｷｬﾌﾞﾚﾀｱｯｾﾝ	1	B [LPO] INC.1-21
1	53320-55401		SCREW	ｽｸﾘｭ	1	[LPO]
2	53320-55411		SCREW	ｽｸﾘｭ	4	[LPO]
3	53320-55421		COVER	ｶﾊﾞｰ	1	[LPO]
4	53320-55432		SPRING,AIR-VALVE	ｽﾌﾟﾘﾝｸﾞ	1	A [LPO]
-	53320-55431		SPRING,AIR-VALVE	ｽﾌﾟﾘﾝｸﾞ	1	B [LPO]
5	513B0-52301		VALVE,AIR	ﾊﾞﾙﾌﾞ	1	[LPO] INC.6
6	52050-59872		DIAPHRAGM	ﾀﾞｲﾔﾌﾗﾑ	1	[LPO]
7	53320-55491		BODY	ﾎﾞﾃﾞｨ	1	[LPO]
8	53320-55521		GASKET	ｶﾞｽｹｯﾄ	1	[LPO]
9	53320-55181		SCREW	ｽｸﾘｭ	4	[LPO]
A2	54240-52701		THROTTLE-ASSY	ｽﾛｯﾄﾙｱｯｾﾝ	1	[LPO] INC.10-13
10	51240-52671		BODY,THROTTLE	ﾎﾞﾃﾞｨ	1	[LPO]
11	51240-52681		SHAFT	ｼｬﾌﾄ	1	[LPO]
12	53320-55441		SCREW	ｽｸﾘｭ	2	[LPO]
13	54240-55021		FLY	ﾌﾗｲ	1	[LPO]
14	54240-52151		GASKET	ｶﾞｽｹｯﾄ	1	[LPO]
15	53320-55731		SPRING,LEVER-RETURN	ｽﾌﾟﾘﾝｸﾞ	1	[LPO]
16	54240-52691		LEVER	ﾚﾊﾞｰ	1	[LPO]
17	53320-55701		BRACKET	ﾌﾞﾗｹｯﾄ	1	[LPO]
18	53320-55621		STOPPER,THROTTLE	ｽﾄｯﾊﾟ	1	[LPO]
19	01100-08025		BOLT	ﾎﾞﾙﾄ	2	[LPO]
20	02010-00008		WASHER	ﾜｯｼｬ	2	[LPO]
21	01400-00008		NUT	ﾅｯﾄ	2	[LPO]

FIG.236 KB-CONVERTER [LPO]

(F50293C0) KBｺﾝﾊﾞｰﾀ

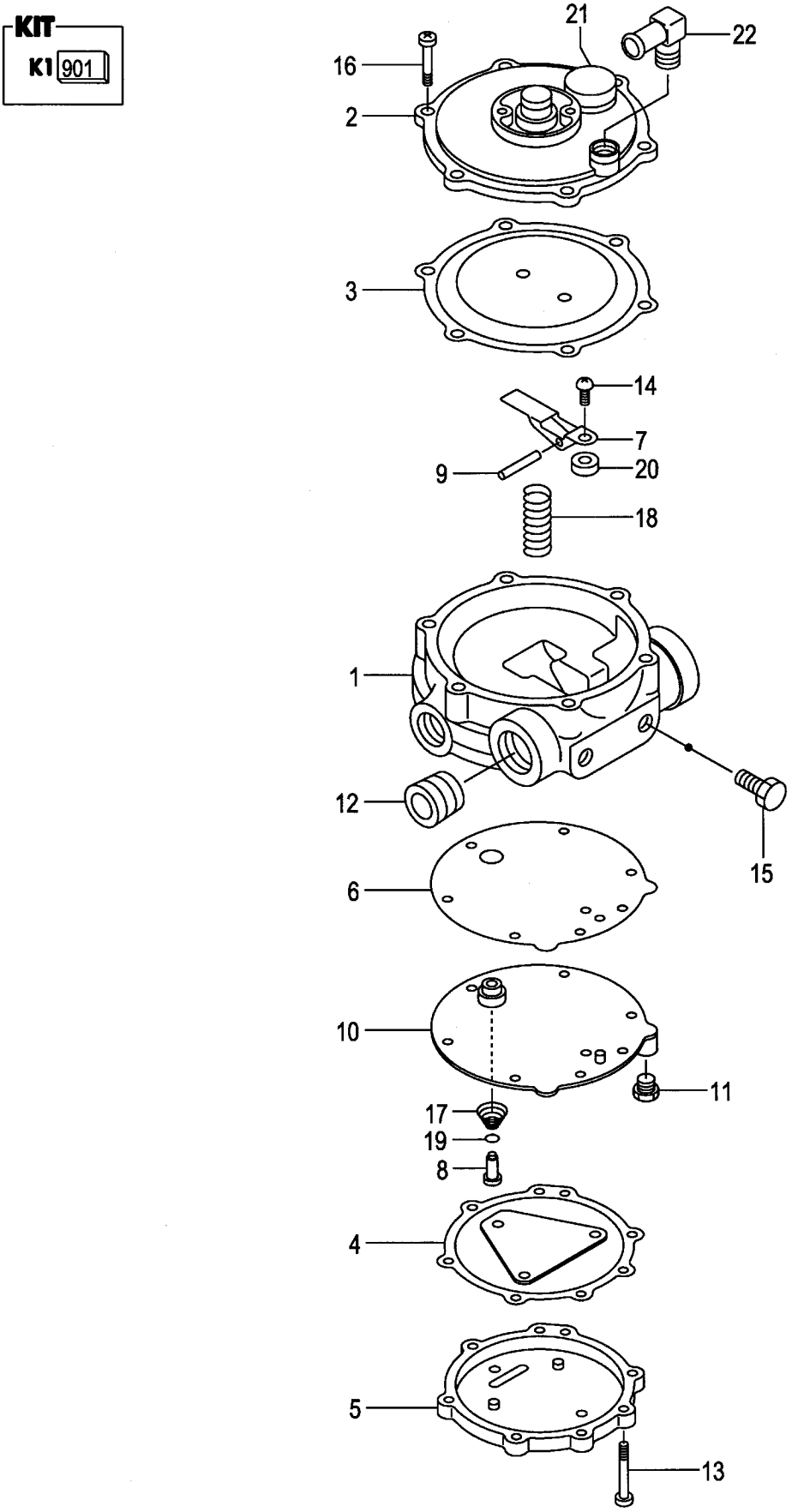

A:FG20C17 FG20T17 FG25C17 FG25T17
B:FG20C6 FG20T6 FG25C6 FG25T6 FG20W6 FG25W6

Item No	Part No.	Mark	Description		Req'd	Remarks : Serial No.
A1	528F0-52221		CONVERTER-ASSY,KB	ｺﾝﾊﾞｰﾀｱｯｾﾝ	1	[LPO] INC.1-22
901	528F0-52611	K1	KIT,REPAIR	ﾘﾍﾟｱｷｯﾄ	1	[LPO] INC.3,4,6,8,13,14,16,20
1	528F0-52501		BODY	ﾎﾞﾃﾞｨ	1	[LPO]
2	528F0-52511		COVER	ｶﾊﾞｰ	1	[LPO]
3	53320-55221	*	DIAPHRAGM	ﾀﾞｲﾔﾌﾗﾑ	1	[LPO]
4	528F0-52521	*	DIAPHRAGM	ﾀﾞｲﾔﾌﾗﾑ	1	[LPO]
5	528F0-52531		COVER	ｶﾊﾞｰ	1	[LPO]
6	528F0-52541	*	GASKET	ｶﾞｽｹｯﾄ	1	[LPO]
7	53320-55241		LEVER	ﾚﾊﾞｰ	1	[LPO]
8	528F0-52551	*	PIN	ﾋﾟﾝ	1	[LPO]
9	53320-55251		PIN	ﾋﾟﾝ	1	[LPO]
10	528F0-52561		PLATE	ﾌﾟﾚｰﾄ	1	[LPO]
11	53320-55331		PLUG	ﾌﾟﾗｸﾞ	1	[LPO]
12	528F0-52571		PLUG	ﾌﾟﾗｸﾞ	1	[LPO]
13	53320-55381	*	SCREW	ｽｸﾘｭ	7	[LPO]
14	53320-55231	*	SCREW	ｽｸﾘｭ	1	[LPO]
15	53320-55071		SCREW	ｽｸﾘｭ	2	[LPO]
16	53320-55001	*	SCREW	ｽｸﾘｭ	6	[LPO]
17	528F0-52581		SPRING	ｽﾌﾟﾘﾝｸﾞ	1	[LPO]
18	53320-55281		SPRING	ｽﾌﾟﾘﾝｸﾞ	1	[LPO]
19	528F0-52591		O-RING	Oﾘﾝｸﾞ	1	[LPO]
20	528F0-52601	*	SEAT	ｼｰﾄ	1	[LPO]
21	53320-55201		SCREEN	ｽｸﾘｰﾝ	1	[LPO]
22	536F0-50351		ELBOW	ｴﾙﾎﾞ	1	[LPO]

FIG.237 FUEL-LOCK FILTER [LPO]

(F50293D0) フューエルロックフィルタ

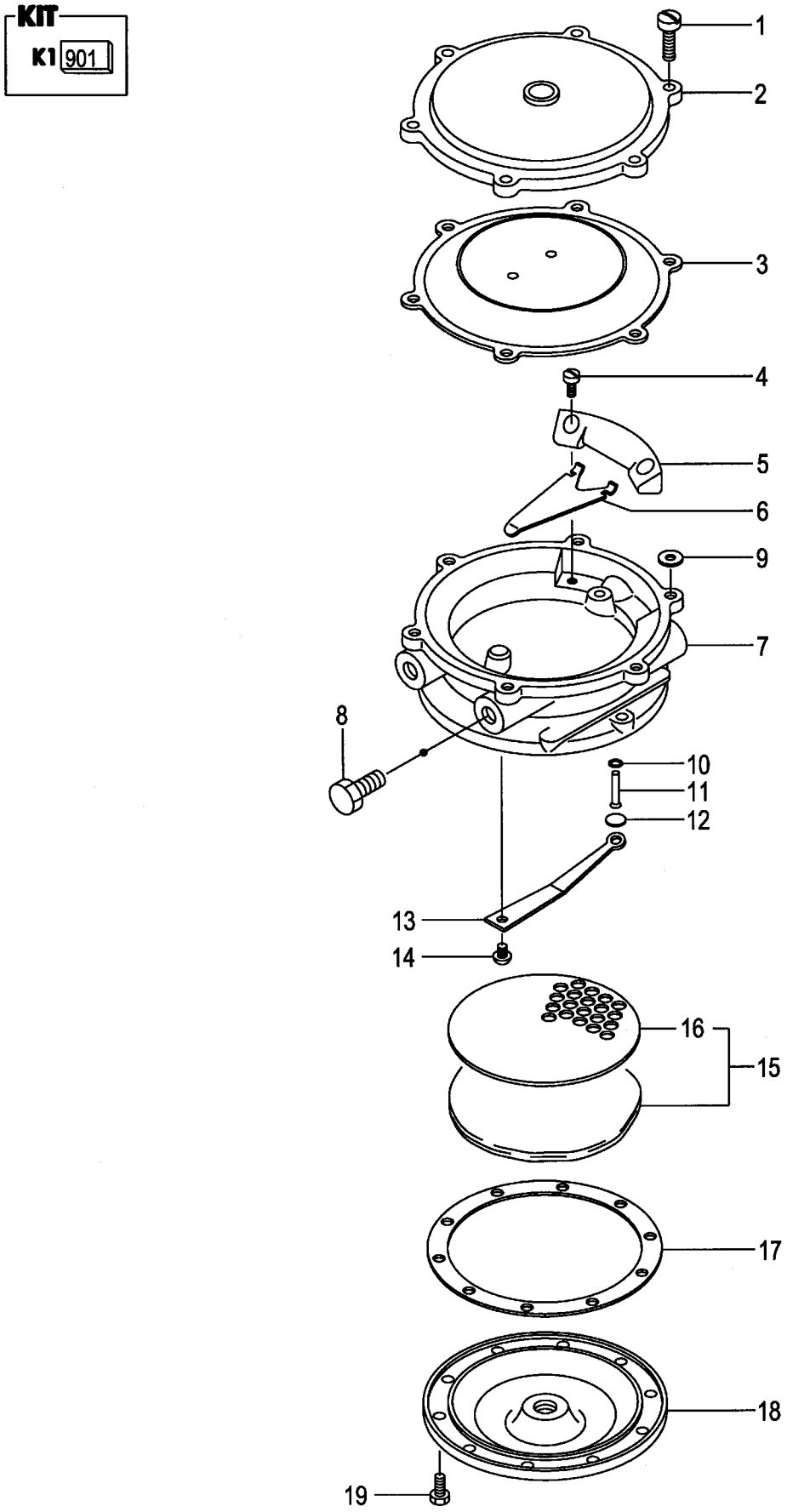

A:FG20C17 FG20T17 FG25C17 FG25T17
B:FG20C6 FG20T6 FG25C6 FG25T6 FG20W6 FG25W6

Item No	Part No.	Mark	Description		Req'd	Remarks : Serial No.
A1	53320-50401		FILTER-ASSY,F/L	ﾌｨﾙﾀｱｯｾﾝ	1	[LPO] INC.1-19
901	52050-59861	K1	KIT,REPAIR	ﾘﾍﾟｱｷｯﾄ	1	[LPO] INC.1,3,10-12,15-17,19
1	53320-55001	*	SCREW	ｽｸﾘｭ	6	[LPO]
2	53320-55011		COVER,DIAPHRAGM	ｶﾊﾞｰ	1	[LPO]
3	53320-55021	*	DIAPHRAGM	ﾀﾞｲﾔﾌﾗﾑ	1	[LPO]
4	53320-55031		SCREW	ｽｸﾘｭ	2	[LPO]
5	53320-55041		SUPPORT	ｻﾎﾟｰﾄ	1	[LPO]
6	53320-55051		LEVER,VALVE	ﾚﾊﾞｰ	1	[LPO]
7	53320-55061		BODY	ﾎﾞﾃﾞｨ	1	[LPO]
8	53320-55071		SCREW	ｽｸﾘｭ	2	[LPO]
9	53320-55081		WASHER	ﾜｯｼｬ	1	[LPO]
10	53320-55091	*	O-RING	Oﾘﾝｸﾞ	1	[LPO]
11	53320-55101	*	PIN,VALVE	ﾋﾟﾝ	1	[LPO]
12	53320-55111	*	SEAT,VALVE	ｼｰﾄ	1	[LPO]
13	53320-55121		SPRING,VALVE	ｽﾌﾟﾘﾝｸﾞ	1	[LPO]
14	53320-55131		SCREW	ｽｸﾘｭ	1	[LPO]
15	53320-55141	*	ELEMENT,FILTER	ｴﾚﾒﾝﾄ	1	[LPO]
16	53320-55151	*	SCREEN,FILTER	ｽｸﾘｰﾝ	1	[LPO]
17	53320-55161	*	GASKET,FILTER-COVER	ｶﾞｽｹｯﾄ	1	[LPO]
18	53320-55171		COVER,FILTER	ｶﾊﾞｰ	1	[LPO]
19	53320-55181	*	SCREW	ｽｸﾘｭ	10	[LPO]

FIG.238 FIRE EXTINGUISHER [FE][FE M]

(F50293E0) ﾌｧｲﾔｲｸｽﾃｨﾝｸﾞｲｯｼｬ

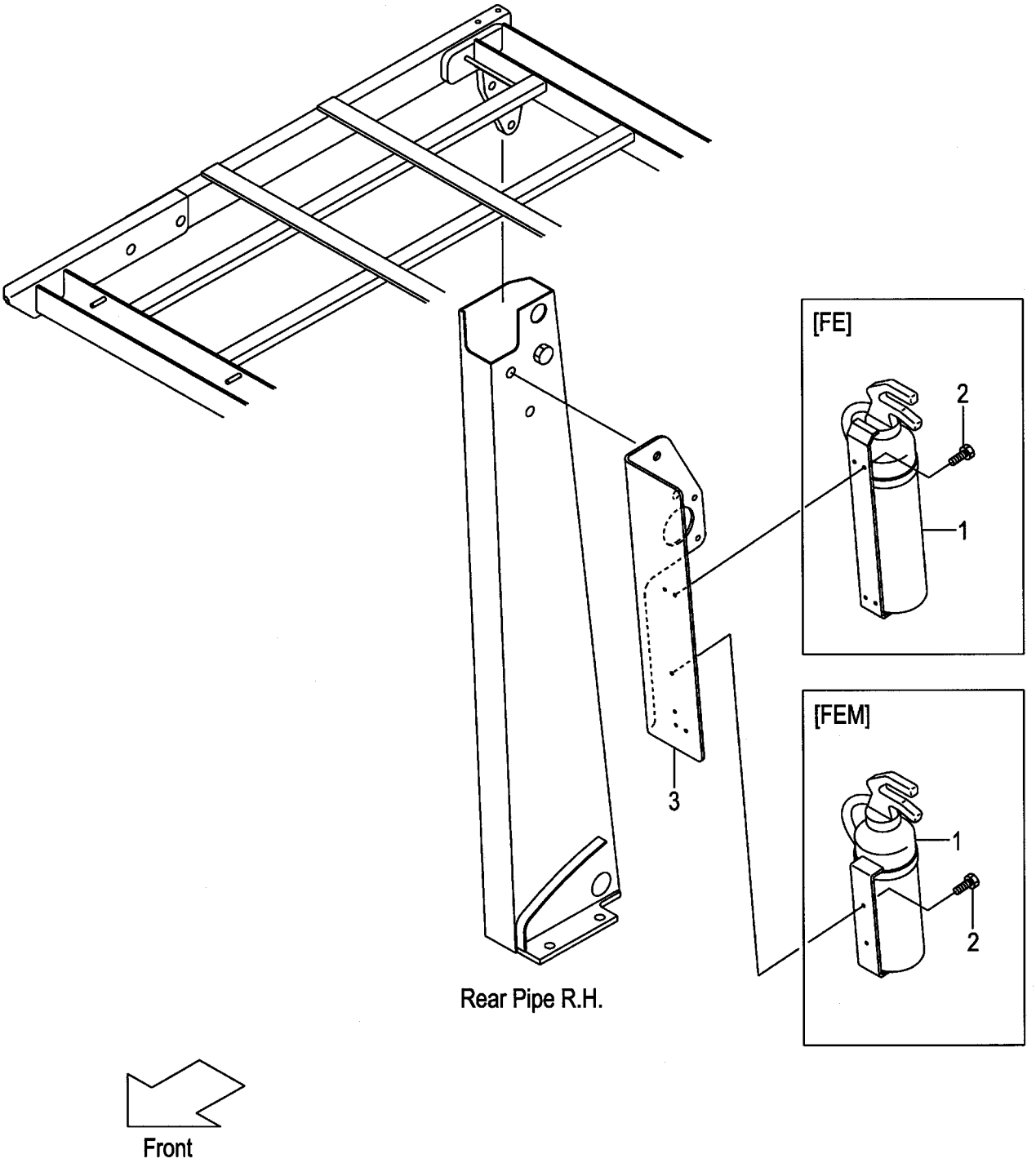

A:FG20C17 FG20T17 FG25C17 FG25T17 C:FD20C17 FD20T17 FD25C17 FD25T17
B:FG20C6 FG20T6 FG25C6 FG25T6 FG20W6 FG25W6 D:FD20C6 FD20T6 FD25C6 FD25T6 FD20W6 FD25W6

Item No	Part No.	Mark	Description		Req'd	Remarks : Serial No.
1	22679-12102		EXTINGUISHER,FIRE	ｲｸｽﾃｨﾝｸﾞｲｯｼｬ	1	[FE]
-	271A9-12191		EXTINGUISHER,FIRE	ｲｸｽﾃｨﾝｸﾞｲｯｼｬ	1	[FE M]
2	01183-05012		BOLT	ﾎﾞﾙﾄ	4	[FE]
-	01183-05012		BOLT	ﾎﾞﾙﾄ	2	[FE M]
3	539A9-62001		BRACKET,EXTINGUISHER	ﾌﾞﾗｹｯﾄ	1	[FE][FE M]

FIG.239 FORK [VM39A]

(M5028110) フォーク

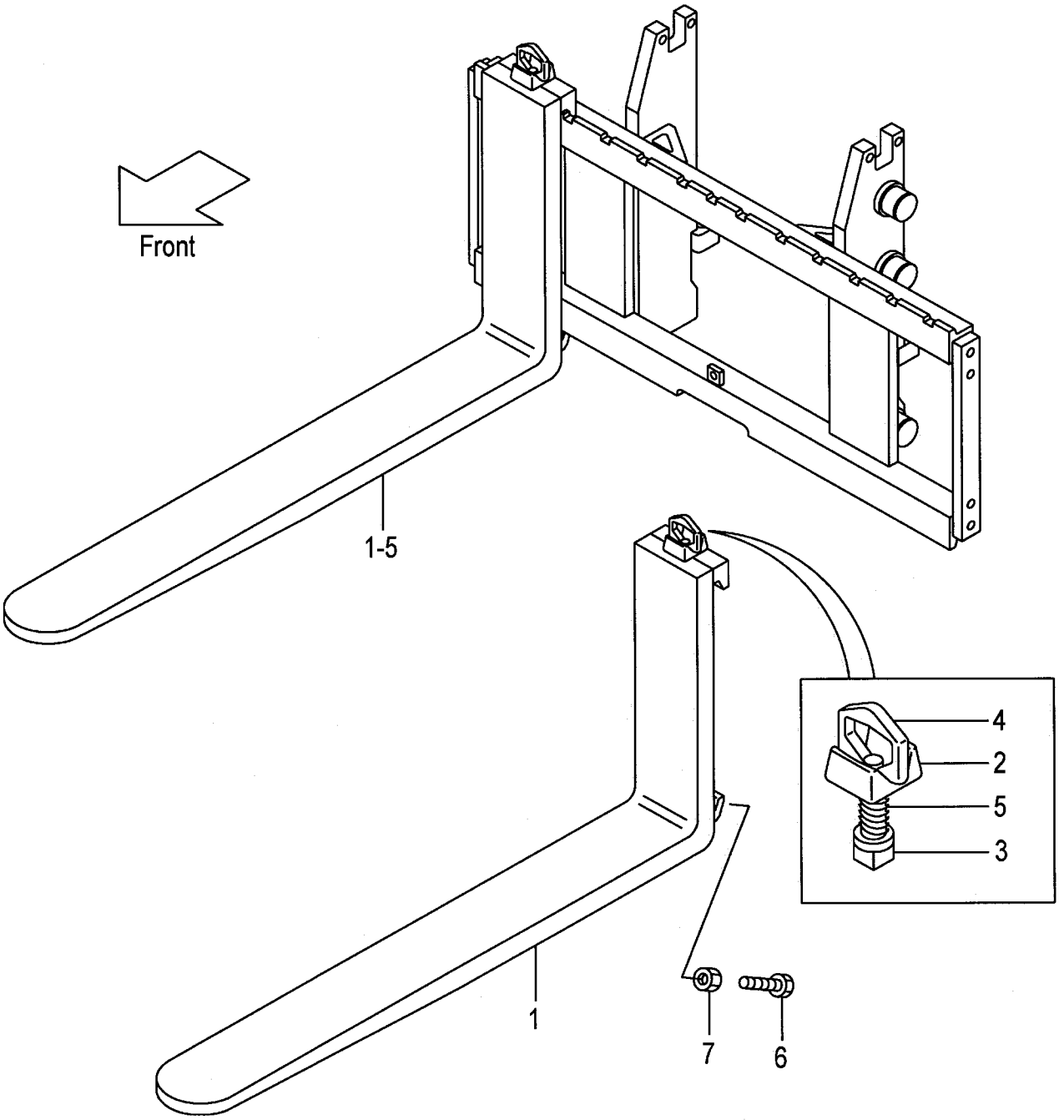

A:VM39A(2T)
B:VM39A(2.5T)

Item No	Part No.	Mark	Description		Req'd	Remarks : Serial No.
1	231A8-10101		FORK	ﾌｫｰｸ	2	A (L=920) INC.2-5
-	214A8-10512		FORK	ﾌｫｰｸ	2	B (L=920) INC.2-5
-	231A8-10171		FORK	ﾌｫｰｸ	2	A [LF090] INC.2-5
-	231F8-10571		FORK	ﾌｫｰｸ	2	B [LF090] INC.2-5
-	231A8-10101		FORK	ﾌｫｰｸ	2	A [LF092] INC.2-5
-	231F8-10501		FORK	ﾌｫｰｸ	2	B [LF092] INC.2-5
-	214A8-10582		FORK	ﾌｫｰｸ	2	[LF100] INC.2-5
-	214A8-10512		FORK	ﾌｫｰｸ	2	[LF107][EX] INC.2-5
-	214A8-10592		FORK	ﾌｫｰｸ	2	[LF110] INC.2-5
-	214A8-10602		FORK	ﾌｫｰｸ	2	[LF120] INC.2-5
-	214A8-10522		FORK	ﾌｫｰｸ	2	[LF122] INC.2-5
-	214A8-10612		FORK	ﾌｫｰｸ	2	[LF130] INC.2-5
-	214A8-10532		FORK	ﾌｫｰｸ	2	[LF137] INC.2-5
-	214A8-10622		FORK	ﾌｫｰｸ	2	[LF140] INC.2-5
-	214A8-10632		FORK	ﾌｫｰｸ	2	[LF150] INC.2-5
-	214A8-10542		FORK	ﾌｫｰｸ	2	[LF152] INC.2-5
-	214A8-10642		FORK	ﾌｫｰｸ	2	[LF160] INC.2-5
-	214A8-10552		FORK	ﾌｫｰｸ	2	[LF167] INC.2-5
-	214A8-10653		FORK	ﾌｫｰｸ	2	[LF170] INC.2-5
-	214A8-10663		FORK	ﾌｫｰｸ	2	[LF180] INC.2-5
-	214A8-10563		FORK	ﾌｫｰｸ	2	[LF182] INC.2-5
-	214A8-10673		FORK	ﾌｫｰｸ	2	[LF190] INC.2-5
-	214A8-10683		FORK	ﾌｫｰｸ	2	[LF200] INC.2-5
-	234A8-10571		FORK	ﾌｫｰｸ	2	[LFD090] INC.2-5
-	234A8-10501		FORK	ﾌｫｰｸ	2	[LFD092] INC.2-5
-	234A8-10581		FORK	ﾌｫｰｸ	2	[LFD100] INC.2-5
-	234A8-10511		FORK	ﾌｫｰｸ	2	[LFD107] INC.2-5
-	234A8-10591		FORK	ﾌｫｰｸ	2	[LFD110] INC.2-5
-	234A8-10601		FORK	ﾌｫｰｸ	2	[LFD120] INC.2-5
-	234A8-10521		FORK	ﾌｫｰｸ	2	[LFD122] INC.2-5
-	234A8-10611		FORK	ﾌｫｰｸ	2	[LFD130] INC.2-5
-	234A8-10531		FORK	ﾌｫｰｸ	2	[LFD137] INC.2-5
-	234A8-10621		FORK	ﾌｫｰｸ	2	[LFD140] INC.2-5
-	234A8-10631		FORK	ﾌｫｰｸ	2	[LFD150] INC.2-5
-	234A8-10541		FORK	ﾌｫｰｸ	2	[LFD152] INC.2-5
-	234A8-10641		FORK	ﾌｫｰｸ	2	[LFD160] INC.2-5
-	234A8-10551		FORK	ﾌｫｰｸ	2	[LFD167] INC.2-5
-	234A8-10652		FORK	ﾌｫｰｸ	2	[LFD170] INC.2-5
-	234A8-10662		FORK	ﾌｫｰｸ	2	[LFD180] INC.2-5
-	234A8-10562		FORK	ﾌｫｰｸ	2	[LFD182] INC.2-5
-	234A8-10672		FORK	ﾌｫｰｸ	2	[LFD190] INC.2-5
-	234A8-10682		FORK	ﾌｫｰｸ	2	[LFD200] INC.2-5
A1	214A8-11001		STOPPER-ASSY,FORK	ｽﾄｯﾊﾟｱｯｾﾝ	2	INC.2-5
2	214A8-12001		HEAD	ﾍｯﾄﾞ	2	

FIG.239 FORK [VM39A]

(M5028110) フォーク

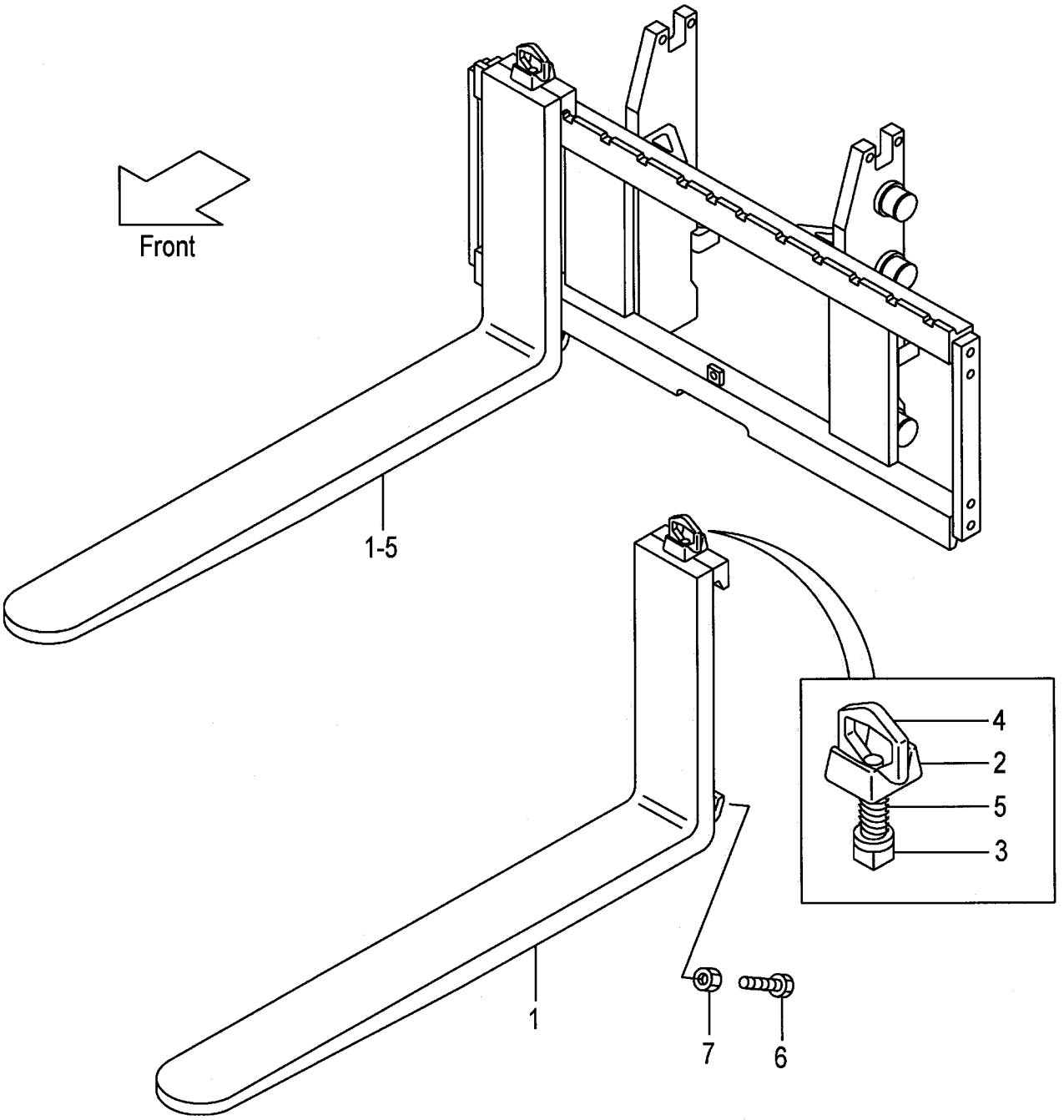

A:VM39A(2T)
B:VM39A(2.5T)

Item No	Part No.	Mark	Description		Req'd	Remarks : Serial No.
3	214A8-12011		STOPPER	ｽﾄｯﾊﾟ	2	
4	214A8-12021		HANDLE	ﾊﾝﾄﾞﾙ	2	
5	214A8-12031		SPRING	ｽﾌﾟﾘﾝｸﾞ	2	
6	216G8-12101		BOLT	ﾎﾞﾙﾄ	4	[LFD]
7	01402-00010		NUT	ﾅｯﾄ	4	[LFD]

FIG.240 LIFT BRACKET [VM39A]

(M5028210) ﾘﾌﾄﾌﾞﾗｹｯﾄ

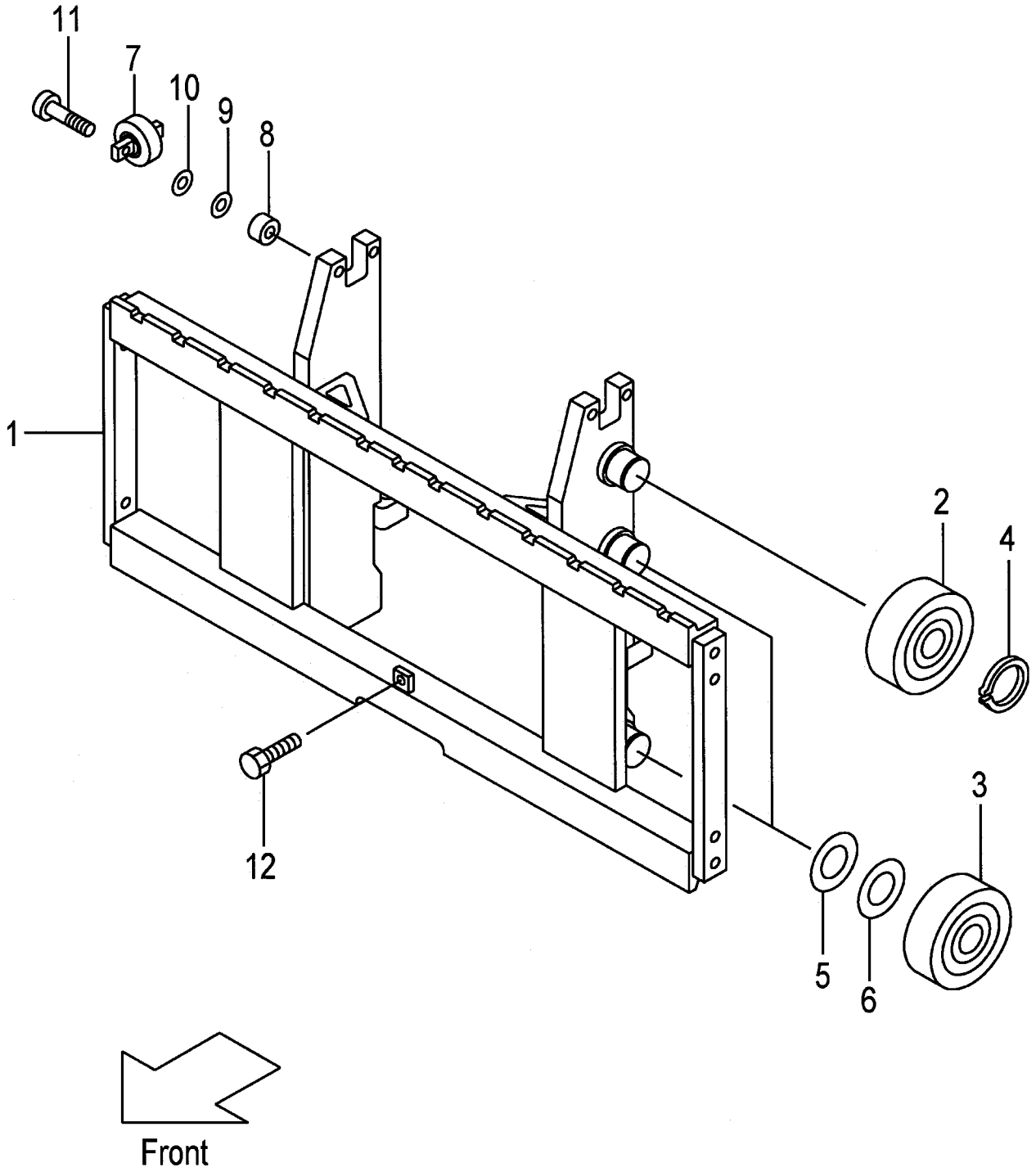

A:VM39A(2T)
B:VM39A(2.5T)

FIG.240
(M5028210)

Item No	Part No.	Mark	Description		Req'd	Remarks : Serial No.
1	239A8-20002		BRACKET,LIFT	ﾌﾞﾗｹｯﾄ	1	
2	277P8-22051		ROLLER,END	ﾛｰﾗ	2	
-	277P8-22061		ROLLER,END	ﾛｰﾗ	(2)	
-	577P3-74001		ROLLER,END	ﾛｰﾗ	2	[FC][CS35][FCS35][FCS45] [FCS55]
-	577P3-74011		ROLLER,END	ﾛｰﾗ	(2)	[FC][CS35][FCS35][FCS45] [FCS55]
3	277P8-22051		ROLLER,END	ﾛｰﾗ	4	
-	577P3-74001		ROLLER,END	ﾛｰﾗ	4	[FC][CS35][FCS35][FCS45] [FCS55]
-	277P8-22061		ROLLER,END	ﾛｰﾗ	(4)	
-	577P3-74011		ROLLER,END	ﾛｰﾗ	(4)	[FC][CS35][FCS35][FCS45] [FCS55]
4	02100-00045		RING,SNAP	ｽﾅｯﾌﾟﾘﾝｸﾞ	2	
5	277P8-22071		SHIM,T-0.5	ｼﾑ	5	
6	277P8-22081		SHIM,T-1.0	ｼﾑ	5	
7	23458-32052		ROLLER,SIDE	ﾛｰﾗ	2	
-	514A3-71701		ROLLER,SIDE	ﾛｰﾗ	2	[FC][CS35][FCS35][FCS45] [FCS55]
8	22548-34031		SPACER	ｽﾍﾟｰｻ	4	
9	22548-34051		SHIM,T-0.5	ｼﾑ	5	
10	22548-34061		SHIM,T-1.0	ｼﾑ	5	
11	01184-12050		BOLT & WASHER	ﾎﾞﾙﾄ & ﾜｯｼｬ	4	
-	01184-12040		BOLT & WASHER	ﾎﾞﾙﾄ & ﾜｯｼｬ	4	[FC][CS35][FCS35][FCS45] [FCS55]
12	01184-12025		BOLT	ﾎﾞﾙﾄ	1	

FIG.241 BACKREST [VM39A]

(M5028220) ﾊﾞｯｸﾚｽﾄ

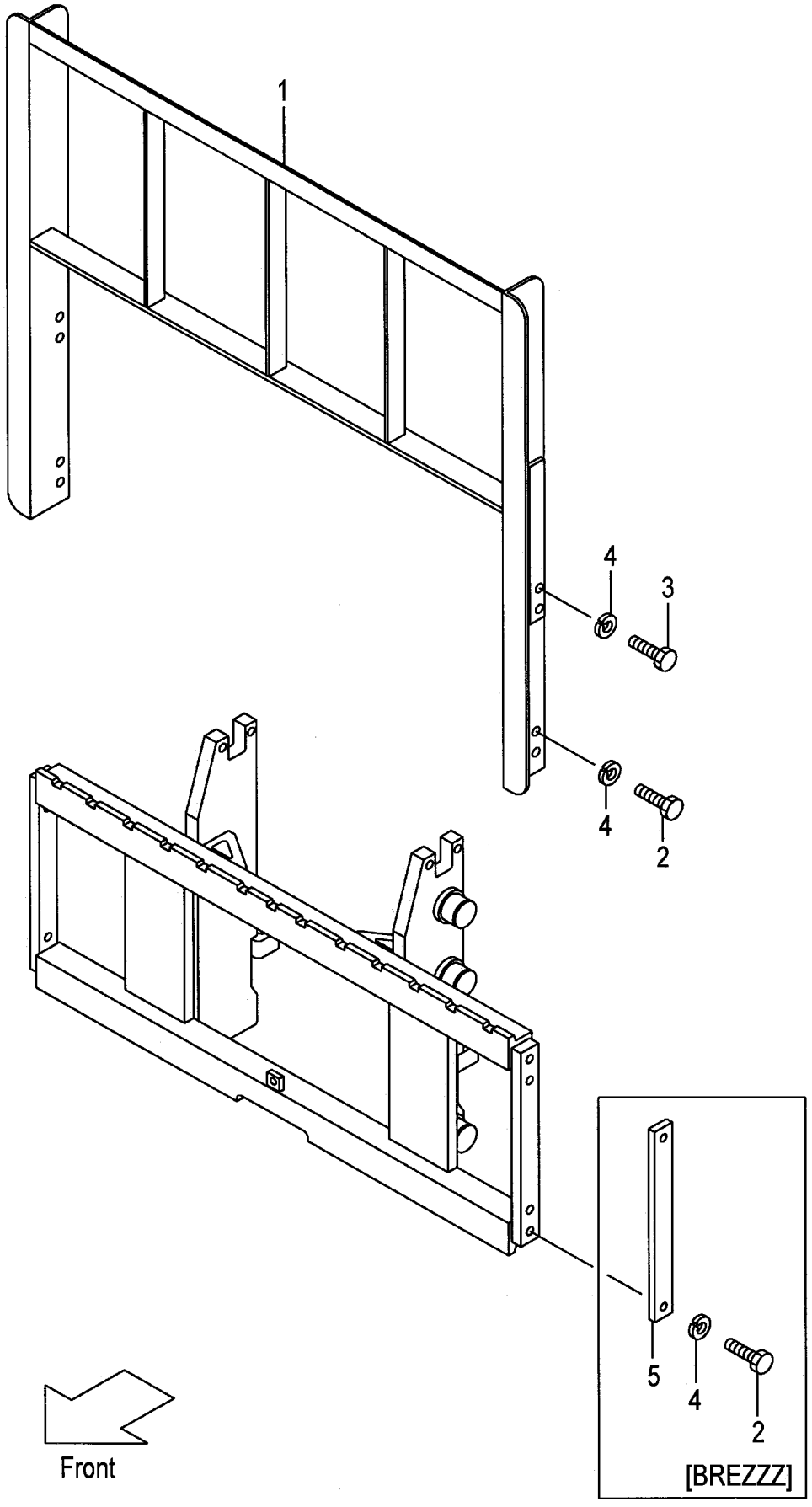

A:VM39A(2T)
B:VM39A(2.5T)

Item No	Part No.	Mark	Description		Req'd	Remarks : Serial No.
1	234A8-22202		BACKREST	ﾊﾞｯｸﾚｽﾄ	1	
2	01100-14025		BOLT	ﾎﾞﾙﾄ	4	
-	01100-14025		BOLT	ﾎﾞﾙﾄ	4	[BREZZZ]
3	01100-14030		BOLT	ﾎﾞﾙﾄ	4	(WITHOUT BREZZZ)
4	02010-00014		WASHER	ﾜｯｼｬ	8	
-	02010-00014		WASHER	ﾜｯｼｬ	4	[BREZZZ]
5	23659-42161		PLATE,SIDE	ﾌﾟﾚｰﾄ	2	[BREZZZ]

FIG.242 MAST [VM39A]

(M5028310) マスト

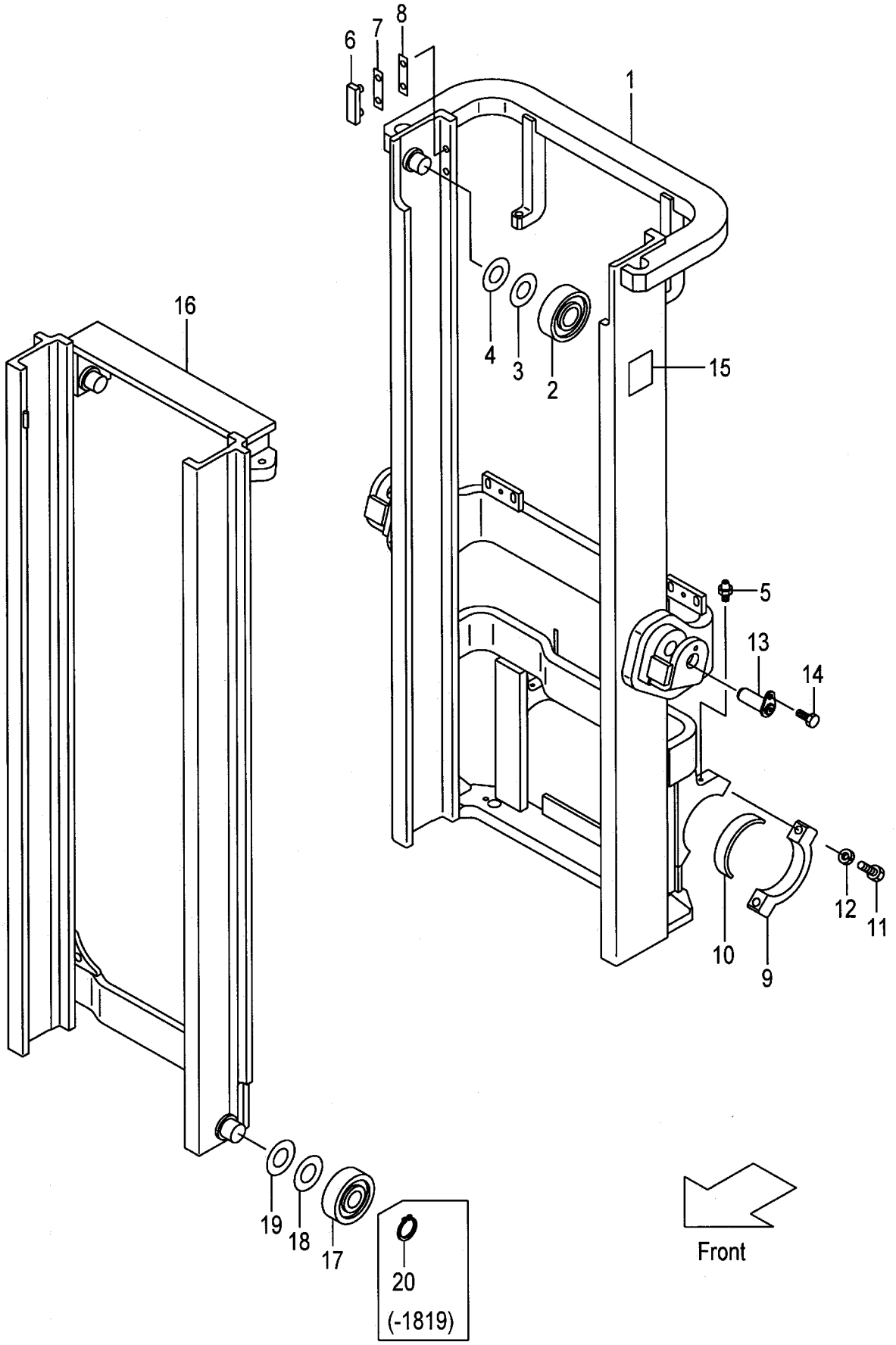

A:VM39A(2T)
B:VM39A(2.5T)

Item No	Part No.	Mark	Description		Req'd	Remarks : Serial No.
1	239A8-30012		MAST,OUTER VM200	ｱｳﾀﾏｽﾄ	1	
-	239A8-30022		MAST,OUTER VM225	ｱｳﾀﾏｽﾄ	1	
-	239A8-30032		MAST,OUTER VM250	ｱｳﾀﾏｽﾄ	1	
-	239A8-30042		MAST,OUTER VM270	ｱｳﾀﾏｽﾄ	1	
-	239A8-30052		MAST,OUTER VM275	ｱｳﾀﾏｽﾄ	1	
-	239A8-30002		MAST,OUTER VM300	ｱｳﾀﾏｽﾄ	1	
-	239A8-30062		MAST,OUTER VM325	ｱｳﾀﾏｽﾄ	1	
-	239A8-30072		MAST,OUTER VM330	ｱｳﾀﾏｽﾄ	1	
-	239A8-30082		MAST,OUTER VM350	ｱｳﾀﾏｽﾄ	1	
-	239A8-30092		MAST,OUTER VM366	ｱｳﾀﾏｽﾄ	1	
-	239A8-30102		MAST,OUTER VM370	ｱｳﾀﾏｽﾄ	1	
-	239A8-30112		MAST,OUTER VM375	ｱｳﾀﾏｽﾄ	1	
-	239A8-30122		MAST,OUTER VM400	ｱｳﾀﾏｽﾄ	1	
-	239A8-30132		MAST,OUTER VM425	ｱｳﾀﾏｽﾄ	1	
-	239A8-30142		MAST,OUTER VM450	ｱｳﾀﾏｽﾄ	1	
-	239A8-30152		MAST,OUTER VM475	ｱｳﾀﾏｽﾄ	1	
-	239A8-30162		MAST,OUTER VM500	ｱｳﾀﾏｽﾄ	1	
-	239A8-30172		MAST,OUTER VM550	ｱｳﾀﾏｽﾄ	1	
-	239A8-30182		MAST,OUTER VM600	ｱｳﾀﾏｽﾄ	1	
2	277P8-22051		ROLLER,END	ﾛｰﾗ	2	
-	577P3-74001		ROLLER,END	ﾛｰﾗ	2	[FC][CS35][FCS35][FCS45] [FCS55]
3	277P8-22071		SHIM	ｼﾑ	12	
4	277P8-22081		SHIM	ｼﾑ	12	
5	04901-00100		FITTING	ﾌｨｯﾃｨﾝｸﾞ	2	
6	216G8-33401		SLIPPER	ｽﾘｯﾊﾟ	2	
7	216G8-33361		SHIM,T-0.5	ｼﾑ	8	
8	216G8-33371		SHIM,T-1.0	ｼﾑ	4	
9	22018-30065		CAP	ｷｬｯﾌﾟ	2	MAST NO.1-1489
-	277P8-32701		CAP	ｷｬｯﾌﾟ	2	MAST NO.1490-
10	214A8-02201		BUSHING	ﾌﾞｯｼﾝｸﾞ	2	
11	01103-16065		BOLT	ﾎﾞﾙﾄ	4	
12	02011-00016		WASHER	ﾜｯｼｬ	4	
13	272K8-52201		PIN	ﾋﾟﾝ	2	
14	216G8-52301		BOLT & WASHER	ﾎﾞﾙﾄ & ﾜｯｼｬ	2	
15	23678-06002		PLATE,NAME	ﾌﾟﾚｰﾄ	1	
16	239A8-30212		MAST,INNER VM200	ｲﾝﾅﾏｽﾄ	1	
-	239A8-30222		MAST,INNER VM225	ｲﾝﾅﾏｽﾄ	1	
-	239A8-30232		MAST,INNER VM250	ｲﾝﾅﾏｽﾄ	1	
-	239A8-30242		MAST,INNER VM270	ｲﾝﾅﾏｽﾄ	1	
-	239A8-30252		MAST,INNER VM275	ｲﾝﾅﾏｽﾄ	1	
-	239A8-30202		MAST,INNER VM300	ｲﾝﾅﾏｽﾄ	1	
-	239A8-30262		MAST,INNER VM325	ｲﾝﾅﾏｽﾄ	1	
-	239A8-30272		MAST,INNER VM330	ｲﾝﾅﾏｽﾄ	1	
-	239A8-30282		MAST,INNER VM350	ｲﾝﾅﾏｽﾄ	1	
-	239A8-30292		MAST,INNER VM366	ｲﾝﾅﾏｽﾄ	1	
-	239A8-30302		MAST,INNER VM370	ｲﾝﾅﾏｽﾄ	1	
-	239A8-30312		MAST,INNER VM375	ｲﾝﾅﾏｽﾄ	1	
-	239A8-30322		MAST,INNER VM400	ｲﾝﾅﾏｽﾄ	1	
-	239A8-30332		MAST,INNER VM425	ｲﾝﾅﾏｽﾄ	1	

FIG.242 MAST [VM39A]

(M5028310) マスト

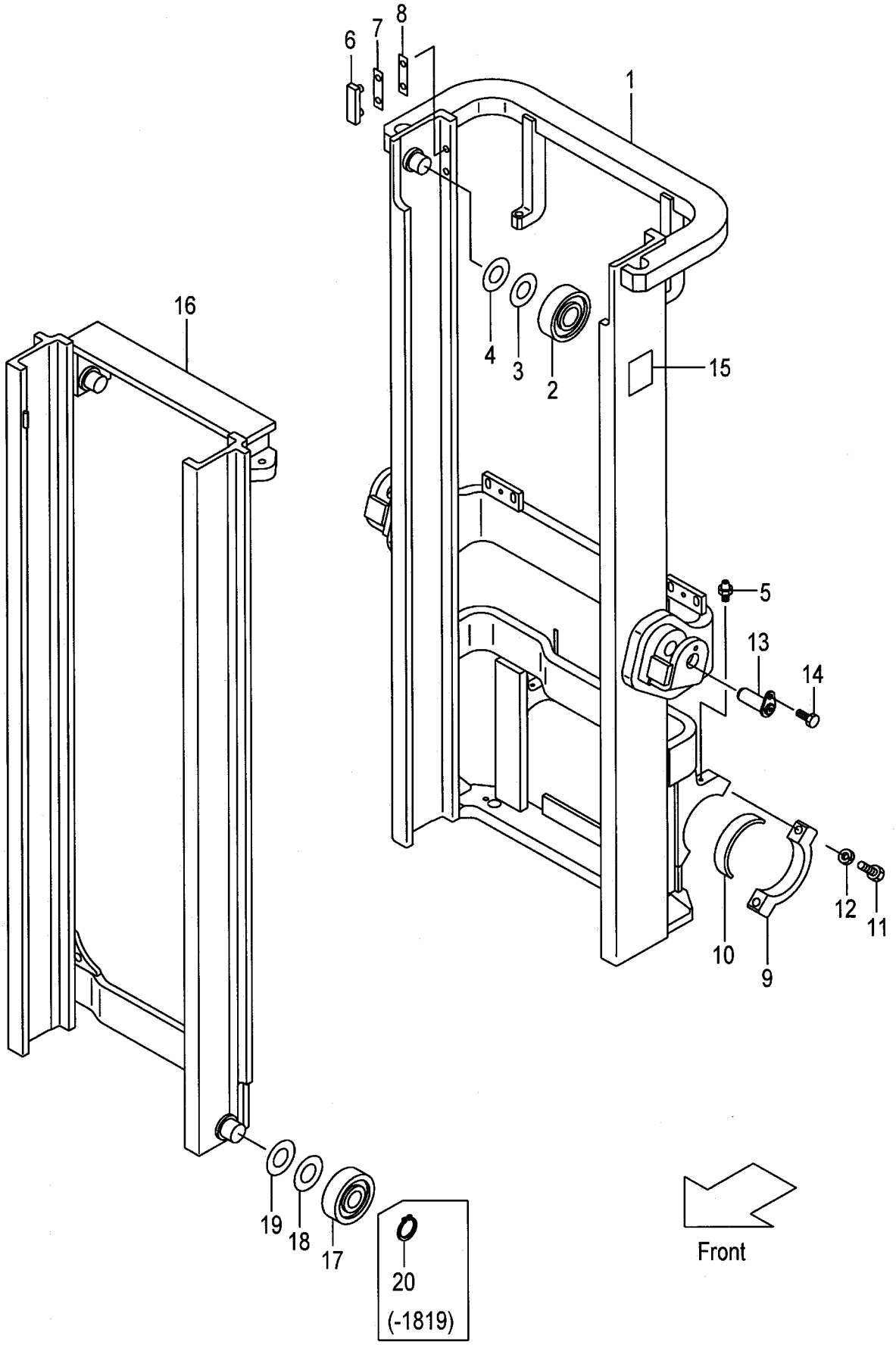

A:VM39A(2T)
B:VM39A(2.5T)

Item No	Part No.	Mark	Description		Req'd	Remarks : Serial No.
-	239A8-30342		MAST,INNER VM450	ｲﾝﾅﾏｽﾄ	1	
-	239A8-30352		MAST,INNER VM475	ｲﾝﾅﾏｽﾄ	1	
-	239A8-30362		MAST,INNER VM500	ｲﾝﾅﾏｽﾄ	1	
-	239A8-30372		MAST,INNER VM550	ｲﾝﾅﾏｽﾄ	1	
-	239A8-30382		MAST,INNER VM600	ｲﾝﾅﾏｽﾄ	1	
17	277P8-22051		ROLLER,END	ﾛｰﾗ	2	
-	577P3-74001		ROLLER,END	ﾛｰﾗ	2	[FC][CS35][FCS35][FCS45] [FCS55]
-	277P8-22061		ROLLER,END	ﾛｰﾗ	(2)	
-	577P3-74011		ROLLER,END	ﾛｰﾗ	(2)	[FC][CS35][FCS35][FCS45] [FCS55]
18	277P8-22071		SHIM,T-0.5	ｼﾑ	12	
19	277P8-22081		SHIM,T-1.0	ｼﾑ	12	
20	09192-30044		RING,SNAP	ｽﾅｯﾌﾟﾘﾝｸﾞ	2	MAST NO.1-1819

FIG.243 LIFT CYLINDER [VM39A]

(M5028410) リフトシリンダ

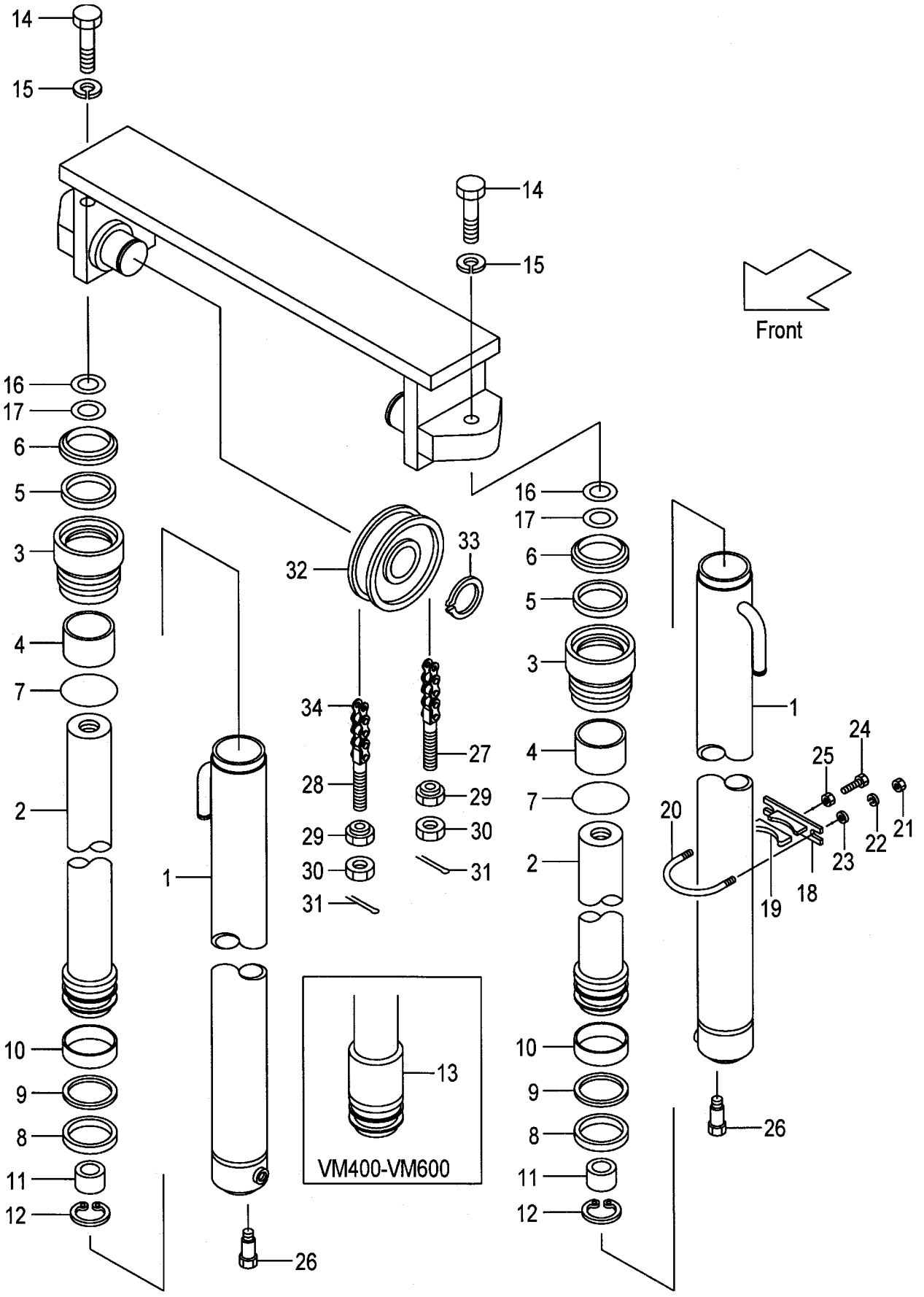

A:VM39A(2T)
B:VM39A(2.5T)

Item No	Part No.	Mark	Description		Req'd	Remarks : Serial No.
A1	277P8-40011		CYL-ASSY,LIFT VM200	ｼﾘﾝﾀﾞｱｯｾﾝ	2	INC.1-12
-	277P8-40021		CYL-ASSY,LIFT VM225	ｼﾘﾝﾀﾞｱｯｾﾝ	2	INC.1-12
-	277P8-40031		CYL-ASSY,LIFT VM250	ｼﾘﾝﾀﾞｱｯｾﾝ	2	INC.1-12
-	277P8-40041		CYL-ASSY,LIFT VM270	ｼﾘﾝﾀﾞｱｯｾﾝ	2	INC.1-12
-	277P8-40051		CYL-ASSY,LIFT VM275	ｼﾘﾝﾀﾞｱｯｾﾝ	2	INC.1-12
-	277P8-40001		CYL-ASSY,LIFT VM300	ｼﾘﾝﾀﾞｱｯｾﾝ	2	INC.1-12
-	277P8-40061		CYL-ASSY,LIFT VM325	ｼﾘﾝﾀﾞｱｯｾﾝ	2	INC.1-12
-	277P8-40071		CYL-ASSY,LIFT VM330	ｼﾘﾝﾀﾞｱｯｾﾝ	2	INC.1-12
-	277P8-40081		CYL-ASSY,LIFT VM350	ｼﾘﾝﾀﾞｱｯｾﾝ	2	INC.1-12
-	277P8-40091		CYL-ASSY,LIFT VM366	ｼﾘﾝﾀﾞｱｯｾﾝ	2	INC.1-12
-	277P8-40101		CYL-ASSY,LIFT VM370	ｼﾘﾝﾀﾞｱｯｾﾝ	2	INC.1-12
-	277P8-40111		CYL-ASSY,LIFT VM375	ｼﾘﾝﾀﾞｱｯｾﾝ	2	INC.1-12
-	277P8-40121		CYL-ASSY,LIFT VM400	ｼﾘﾝﾀﾞｱｯｾﾝ	2	INC.1-13
-	277P8-40131		CYL-ASSY,LIFT VM425	ｼﾘﾝﾀﾞｱｯｾﾝ	2	INC.1-13
-	277P8-40141		CYL-ASSY,LIFT VM450	ｼﾘﾝﾀﾞｱｯｾﾝ	2	INC.1-13
-	277P8-40151		CYL-ASSY,LIFT VM475	ｼﾘﾝﾀﾞｱｯｾﾝ	2	INC.1-13
-	277P8-40161		CYL-ASSY,LIFT VM500	ｼﾘﾝﾀﾞｱｯｾﾝ	2	INC.1-13
-	277P8-40171		CYL-ASSY,LIFT VM550	ｼﾘﾝﾀﾞｱｯｾﾝ	2	INC.1-13
-	277P8-40181		CYL-ASSY,LIFT VM600	ｼﾘﾝﾀﾞｱｯｾﾝ	2	INC.1-13
1	B-30697-51101		BODY,CYL VM200	ﾎﾞﾃﾞｨ	2	
-	B-30697-51201		BODY,CYL VM225	ﾎﾞﾃﾞｨ	2	
-	B-30697-51301		BODY,CYL VM250	ﾎﾞﾃﾞｨ	2	
-	B-30697-51401		BODY,CYL VM270	ﾎﾞﾃﾞｨ	2	
-	B-30697-51501		BODY,CYL VM275	ﾎﾞﾃﾞｨ	2	
-	B-30697-51601		BODY,CYL VM300	ﾎﾞﾃﾞｨ	2	
-	B-30697-51701		BODY,CYL VM325	ﾎﾞﾃﾞｨ	2	
-	B-30697-51801		BODY,CYL VM330	ﾎﾞﾃﾞｨ	2	
-	B-30697-51901		BODY,CYL VM350	ﾎﾞﾃﾞｨ	2	
-	B-30697-52001		BODY,CYL VM366	ﾎﾞﾃﾞｨ	2	
-	B-30697-52101		BODY,CYL VM370	ﾎﾞﾃﾞｨ	2	
-	B-30697-52201		BODY,CYL VM375	ﾎﾞﾃﾞｨ	2	
-	B-30697-52301		BODY,CYL VM400	ﾎﾞﾃﾞｨ	2	
-	B-30697-52401		BODY,CYL VM425	ﾎﾞﾃﾞｨ	2	
-	B-30697-52501		BODY,CYL VM450	ﾎﾞﾃﾞｨ	2	
-	B-30697-52601		BODY,CYL VM475	ﾎﾞﾃﾞｨ	2	
-	B-30697-52701		BODY,CYL VM500	ﾎﾞﾃﾞｨ	2	
-	B-30697-52801		BODY,CYL VM550	ﾎﾞﾃﾞｨ	2	
-	B-30697-52901		BODY,CYL VM600	ﾎﾞﾃﾞｨ	2	
2	B-30697-51102		ROD,PISTON VM200	ﾛｯﾄﾞ	2	
-	B-30697-51202		ROD,PISTON VM225	ﾛｯﾄﾞ	2	
-	B-30697-51302		ROD,PISTON VM250	ﾛｯﾄﾞ	2	
-	B-30697-51402		ROD,PISTON VM270	ﾛｯﾄﾞ	2	
-	B-30697-51502		ROD,PISTON VM275	ﾛｯﾄﾞ	2	
-	B-30697-51602		ROD,PISTON VM300	ﾛｯﾄﾞ	2	
-	B-30697-51702		ROD,PISTON VM325	ﾛｯﾄﾞ	2	
-	B-30697-51802		ROD,PISTON VM330	ﾛｯﾄﾞ	2	
-	B-30697-51902		ROD,PISTON VM350	ﾛｯﾄﾞ	2	
-	B-30697-52002		ROD,PISTON VM366	ﾛｯﾄﾞ	2	
-	B-30697-52102		ROD,PISTON VM370	ﾛｯﾄﾞ	2	
-	B-30697-52202		ROD,PISTON VM375	ﾛｯﾄﾞ	2	

FIG.243 LIFT CYLINDER [VM39A]

(M5028410) リフトシリンダ

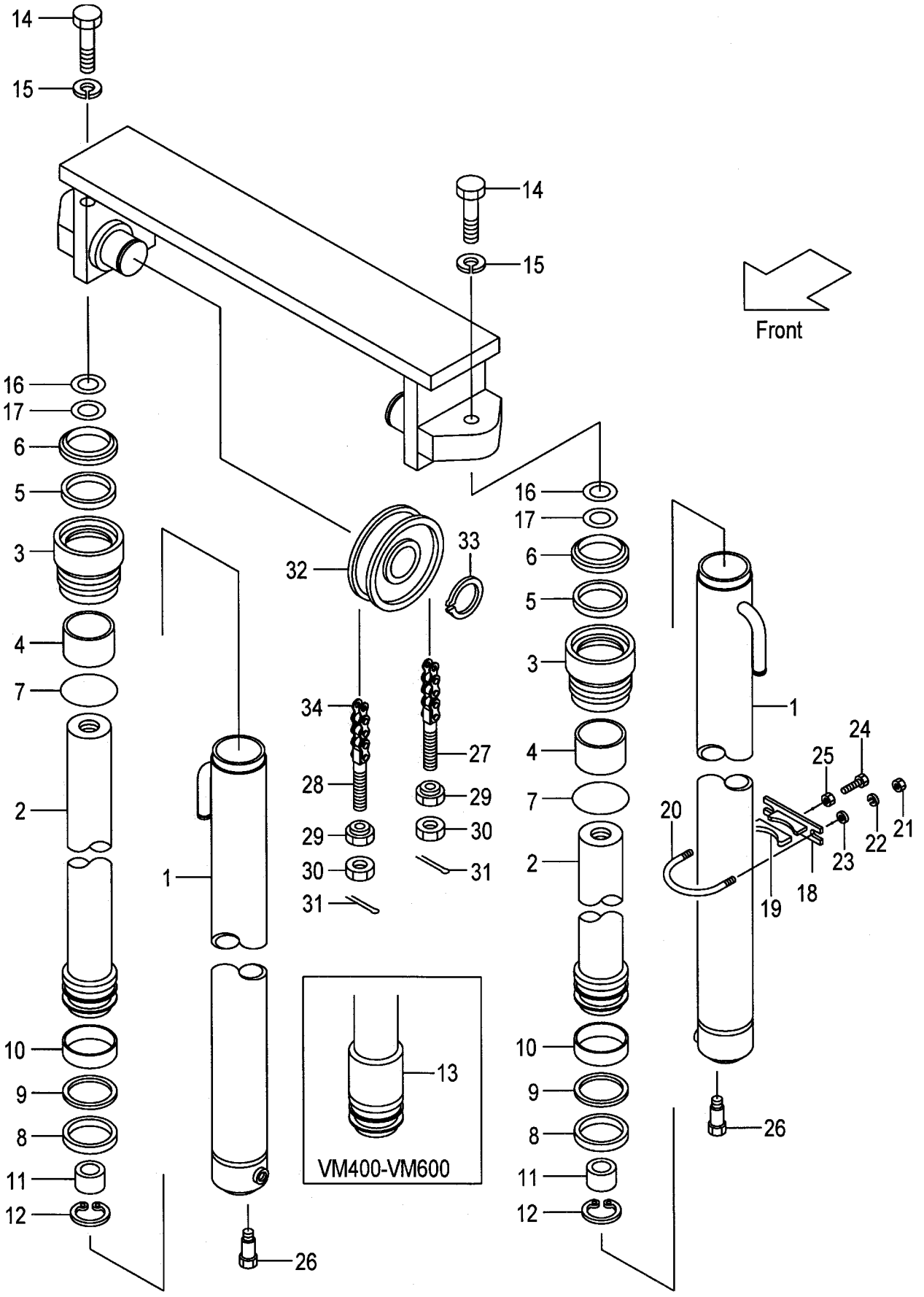

A:VM39A(2T)
B:VM39A(2.5T)

Item No	Part No.	Mark	Description		Req'd	Remarks : Serial No.
-	B-30697-52302		ROD,PISTON VM400	ﾛｯﾄﾞ	2	
-	B-30697-52402		ROD,PISTON VM425	ﾛｯﾄﾞ	2	
-	B-30697-52502		ROD,PISTON VM450	ﾛｯﾄﾞ	2	
-	B-30697-52602		ROD,PISTON VM475	ﾛｯﾄﾞ	2	
-	B-30697-52702		ROD,PISTON VM500	ﾛｯﾄﾞ	2	
-	B-30697-52802		ROD,PISTON VM550	ﾛｯﾄﾞ	2	
-	B-30697-52902		ROD,PISTON VM600	ﾛｯﾄﾞ	2	
3	B-30121-50102	*	CAP	ｷｬｯﾌﾟ	2	
4	B-30131-40017	*	BUSHING	ﾌﾞｯｼﾝｸﾞ	2	
5	B-30961-04012	*	U-RING	Uﾘﾝｸﾞ	2	
6	B-30191-40025	*	RING,WIPER	ﾘﾝｸﾞ	2	
7	B-30161-91774	*	O-RING	Oﾘﾝｸﾞ	2	
8	B-30161-50046	*	U-RING	Uﾘﾝｸﾞ	2	
9	B-30461-50039	*	RING,BACK-UP	ﾘﾝｸﾞ	2	
10	B-30131-50018		BUSHING	ﾌﾞｯｼﾝｸﾞ	2	
11	B-30551-91003		RING	ﾘﾝｸﾞ	2	
12	B-30141-91049		RING,SNAP	ｽﾅｯﾌﾟﾘﾝｸﾞ	2	
13	B-30286-95303		SPACER VM400	ｽﾍﾟｰｻ	2	
-	B-30286-95303		SPACER VM425	ｽﾍﾟｰｻ	2	
-	B-30286-95303		SPACER VM450	ｽﾍﾟｰｻ	2	
-	B-30286-95303		SPACER VM475	ｽﾍﾟｰｻ	2	
-	B-30286-95303		SPACER VM500	ｽﾍﾟｰｻ	2	
-	B-30296-11903		SPACER VM550	ｽﾍﾟｰｻ	2	
-	B-30296-11903		SPACER VM600	ｽﾍﾟｰｻ	2	
14	01103-14040		BOLT	ﾎﾞﾙﾄ	2	
15	02011-00014		WASHER	ﾜｯｼｬ	2	
16	22517-40051		SHIM,T-0.2	ｼﾑ	4	
17	22717-40081		SHIM,T-0.5	ｼﾑ	4	
A2	215E8-42171		SUPPORT-ASSY	ｻﾎﾟｰﾄｱｯｾﾝ	2	(VM200-375) INC.18,19
-	215E8-42171		SUPPORT-ASSY	ｻﾎﾟｰﾄｱｯｾﾝ	4	(VM400-600) INC.18,19
18	215E8-42181		SUPPORT	ｻﾎﾟｰﾄ	2	(VM200-375)
-	215E8-42181		SUPPORT	ｻﾎﾟｰﾄ	4	(VM400-600)
19	24868-42111		RUBBER	ﾗﾊﾞｰ	2	(VM200-375)
-	24868-42111		RUBBER	ﾗﾊﾞｰ	4	(VM400-600)
20	234A8-42551		U-BOLT	Uﾎﾞﾙﾄ	2	(VM200-375)
-	234A8-42551		U-BOLT	Uﾎﾞﾙﾄ	4	(VM400-600)
21	234A8-42561		NUT	ﾅｯﾄ	4	(VM200-375)
-	234A8-42561		NUT	ﾅｯﾄ	8	(VM400-600)
22	02010-20010		WASHER	ﾜｯｼｬ	4	(VM200-375)
-	02010-20010		WASHER	ﾜｯｼｬ	8	(VM400-600)
23	02000-20010		WASHER	ﾜｯｼｬ	4	(VM200-375)
-	02000-20010		WASHER	ﾜｯｼｬ	8	(VM400-600)
24	232A8-42201		BOLT	ﾎﾞﾙﾄ	2	(VM200-375)
-	232A8-42201		BOLT	ﾎﾞﾙﾄ	4	(VM400-600)
25	234A8-42571		NUT	ﾅｯﾄ	2	(VM200-375)
-	234A8-42571		NUT	ﾅｯﾄ	4	(VM400-600)
26	214A8-42661		BOLT	ﾎﾞﾙﾄ	2	
27	23500-82001		PIN,ANCHOR	ﾋﾟﾝ	2	
-	23658-42531		PIN,ANCHOR	ﾋﾟﾝ	2	[FC][FCS35][FCS45][FCS55]
28	52672-72231		PIN,ANCHOR	ﾋﾟﾝ	2	

FIG.243 LIFT CYLINDER [VM39A]

(M5028410) リフトシリンダ

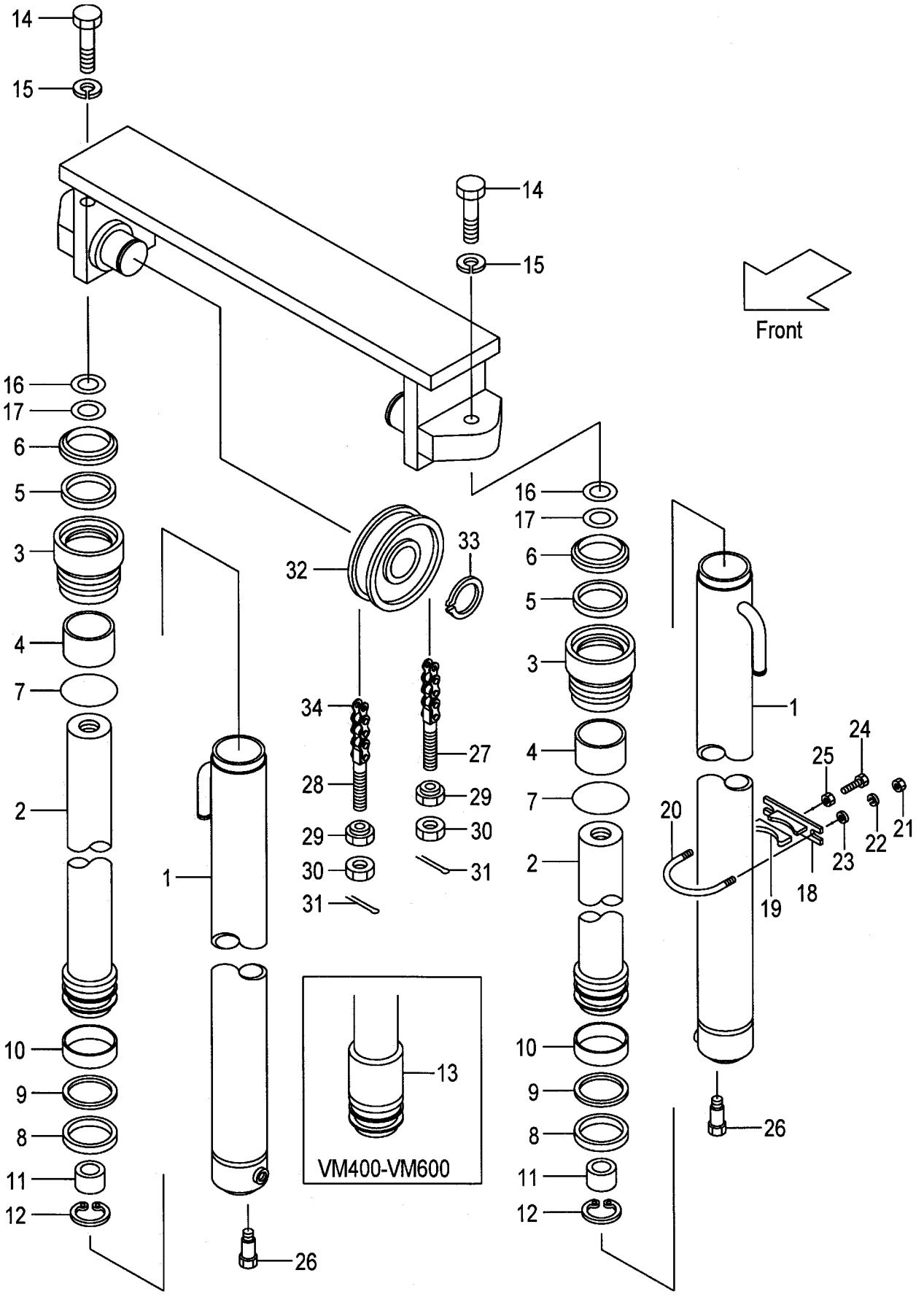

A:VM39A(2T)
B:VM39A(2.5T)

Item No	Part No.	Mark	Description		Req'd	Remarks : Serial No.
-	22218-42111		PIN,ANCHOR	ﾋﾟﾝ	2	[FC][FCS35][FCS45][FCS55]
29	22218-40191		NUT	ﾅｯﾄ	4	
30	01400-00018		NUT	ﾅｯﾄ	4	
31	02200-03030		PIN	ﾋﾟﾝ	4	
32	234A8-43501		SHEAVE	ｼｰﾌﾞ	2	
-	22208-40031		SHEAVE	ｼｰﾌﾞ	2	[FC][FCS35][FCS45][FCS55]
33	02100-00040		RING,SNAP	ｽﾅｯﾌﾟﾘﾝｸﾞ	2	
34	22679-45711		CHAIN,LEAF VM200	ﾁｪｰﾝ	2	
-	22679-45771		CHAIN,LEAF VM225	ﾁｪｰﾝ	2	
-	22679-45831		CHAIN,LEAF VM250	ﾁｪｰﾝ	2	
-	22679-45891		CHAIN,LEAF VM270	ﾁｪｰﾝ	2	
-	22679-45911		CHAIN,LEAF VM275	ﾁｪｰﾝ	2	
-	22679-45971		CHAIN,LEAF VM300	ﾁｪｰﾝ	2	
-	22679-46031		CHAIN,LEAF VM325	ﾁｪｰﾝ	2	
-	22679-46051		CHAIN,LEAF VM330	ﾁｪｰﾝ	2	
-	22679-46091		CHAIN,LEAF VM350	ﾁｪｰﾝ	2	
-	22679-46151		CHAIN,LEAF VM366	ﾁｪｰﾝ	2	
-	22679-46151		CHAIN,LEAF VM370	ﾁｪｰﾝ	2	
-	22679-46171		CHAIN,LEAF VM375	ﾁｪｰﾝ	2	
-	22679-46251		CHAIN,LEAF VM400	ﾁｪｰﾝ	2	
-	22679-46331		CHAIN,LEAF VM425	ﾁｪｰﾝ	2	
-	22679-46391		CHAIN,LEAF VM450	ﾁｪｰﾝ	2	
-	22679-46451		CHAIN,LEAF VM475	ﾁｪｰﾝ	2	
-	22679-46511		CHAIN,LEAF VM500	ﾁｪｰﾝ	2	
-	22679-46671		CHAIN,LEAF VM550	ﾁｪｰﾝ	2	
-	22679-46811		CHAIN,LEAF VM600	ﾁｪｰﾝ	2	
-	09001-10043		CHAIN,ROLLER VM200	ﾁｪｰﾝ	2	[FC][FCS35][FCS45][FCS55]
-	09001-10047		CHAIN,ROLLER VM225	ﾁｪｰﾝ	2	[FC][FCS35][FCS45][FCS55]
-	09001-10051		CHAIN,ROLLER VM250	ﾁｪｰﾝ	2	MAST NO.1-468
-	09001-10049		CHAIN,ROLLER VM250	ﾁｪｰﾝ	2	MAST NO.469-
						[FC][FCS35][FCS45][FCS55]
-	09001-10053		CHAIN,ROLLER VM270	ﾁｪｰﾝ	2	[FC][FCS35][FCS45][FCS55]
-	09001-10055		CHAIN,ROLLER VM275	ﾁｪｰﾝ	2	MAST NO.1-468
						[FC][FCS35][FCS45][FCS55]
-	09001-10053		CHAIN,ROLLER VM275	ﾁｪｰﾝ	2	MAST NO.469-
						[FC][FCS35][FCS45][FCS55]
-	09001-10059		CHAIN,ROLLER VM300	ﾁｪｰﾝ	2	MAST NO.1-468
						[FC][FCS35][FCS45][FCS55]
-	09001-10057		CHAIN,ROLLER VM300	ﾁｪｰﾝ	2	MAST NO.469-
						[FC][FCS35][FCS45][FCS55]
-	09001-10063		CHAIN,ROLLER VM325	ﾁｪｰﾝ	2	MAST NO.1-468
						[FC][FCS35][FCS45][FCS55]
-	09001-10061		CHAIN,ROLLER VM325	ﾁｪｰﾝ	2	[FC][FCS35][FCS45][FCS55]
-	09001-10063		CHAIN,ROLLER VM330	ﾁｪｰﾝ	2	[FC][FCS35][FCS45][FCS55]
-	09001-10067		CHAIN,ROLLER VM350	ﾁｪｰﾝ	2	MAST NO.1-468
						[FC][FCS35][FCS45][FCS55]
-	09001-10065		CHAIN,ROLLER VM350	ﾁｪｰﾝ	2	MAST NO.469-
						[FC][FCS35][FCS45][FCS55]
-	09001-10069		CHAIN,ROLLER VM366	ﾁｪｰﾝ	2	[FC][FCS35][FCS45][FCS55]
-	09001-10069		CHAIN,ROLLER VM370	ﾁｪｰﾝ	2	[FC][FCS35][FCS45][FCS55]

FIG.243 LIFT CYLINDER [VM39A]

(M5028410) リフトシリンダ

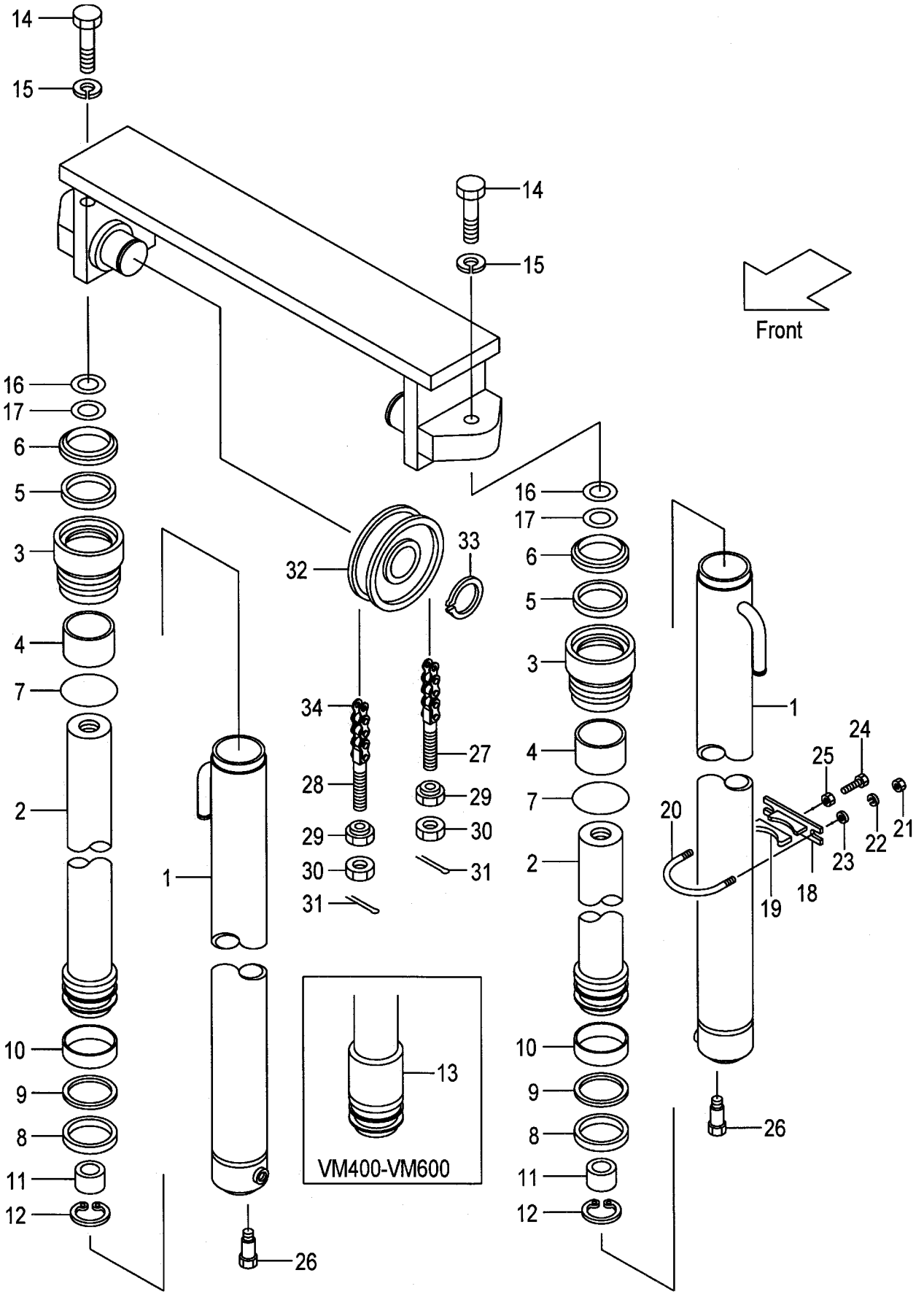

A:VM39A(2T)
B:VM39A(2.5T)

Item No	Part No.	Mark	Description	Req'd	Remarks : Serial No.
-	09001-10071		CHAIN,ROLLER VM375 チェーン	2	MAST NO.1-468 [FC][FCS35][FCS45][FCS55]
-	09001-10069		CHAIN,ROLLER VM375 チェーン	2	MAST NO.469- [FC][FCS35][FCS45][FCS55]
-	09001-10075		CHAIN,ROLLER VM400 チェーン	2	[FC][FCS35][FCS45][FCS55]
-	09001-10079		CHAIN,ROLLER VM425 チェーン	2	[FC][FCS35][FCS45][FCS55]
-	09001-10083		CHAIN,ROLLER VM450 チェーン	2	[FC][FCS35][FCS45][FCS55]
-	09001-10087		CHAIN,ROLLER VM475 チェーン	2	[FC][FCS35][FCS45][FCS55]
-	09001-10091		CHAIN,ROLLER VM500 チェーン	2	[FC][FCS35][FCS45][FCS55]
-	09001-10101		CHAIN,ROLLER VM550 チェーン	2	[FC][FCS35][FCS45][FCS55]
-	09001-10109		CHAIN,ROLLER VM600 チェーン	2	[FC][FCS35][FCS45][FCS55]
K1	B-3050B-00119		KIT,CAP キャップキット	2	INC.3,4
K2	B-3050A-00093		KIT,REPAIR リペアキット	2	INC.5-9

FIG.244 MAST PIPING [VM39A]

(M5028420) マストパイピング

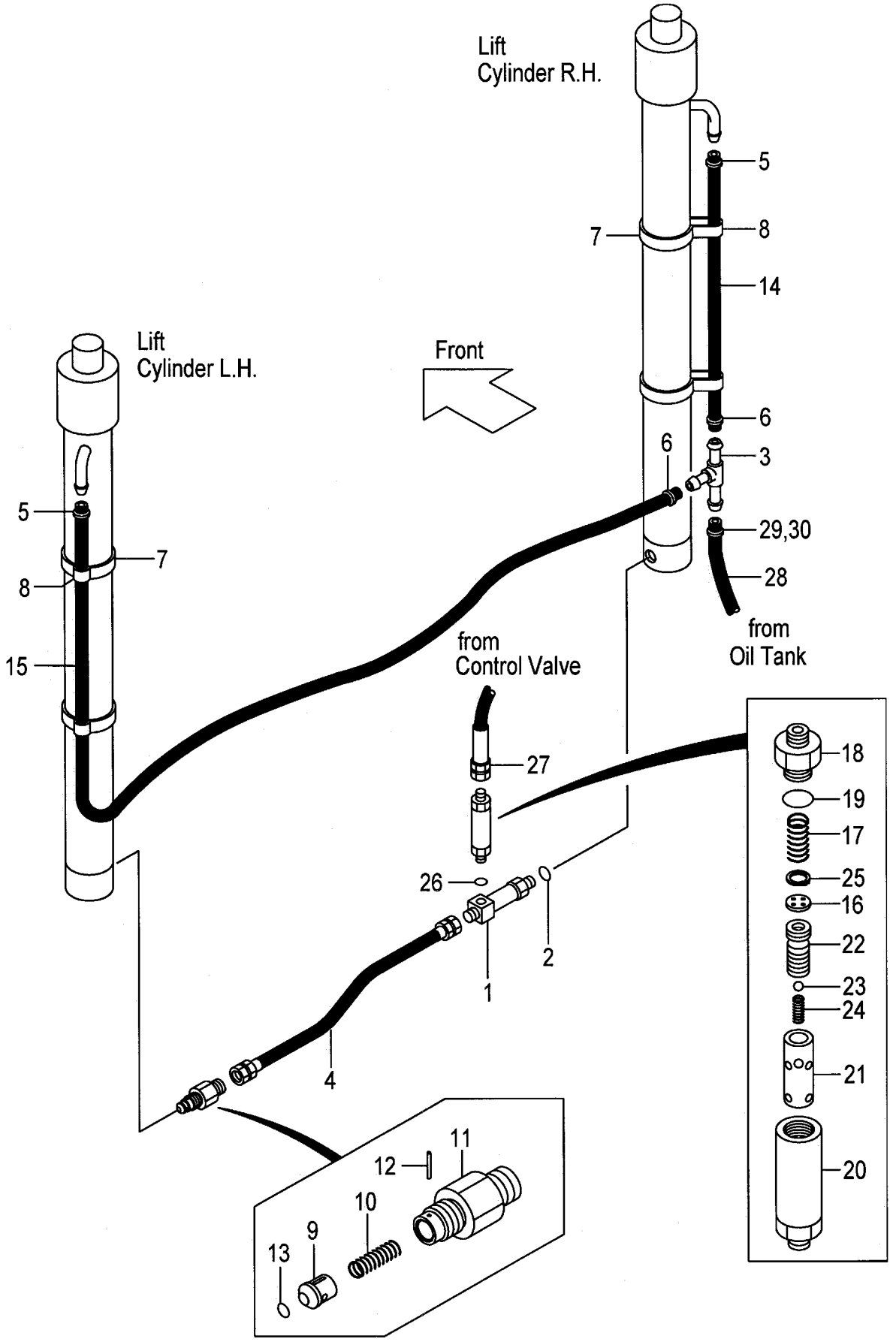

A:VM39A(2T)
B:VM39A(2.5T)

Item No	Part No.	Mark	Description		Req'd	Remarks : Serial No.
A1	234A8-41101		THREE-WAY-ASSY	ｽﾘｰｳｪｲｱｯｾﾝ	1	INC.1,2
1	NO PART NO.	#	THREE-WAY	ｽﾘｰｳｪｲ	1	
2	03320-00140		O-RING	Oﾘﾝｸﾞ	1	
3	23679-45051		THREE-WAY	ｽﾘｰｳｪｲ	1	
-	53675-55051		THREE-WAY	ｽﾘｰｳｪｲ	1	[FC][RTL]
4	234A8-02201		HOSE	ﾎｰｽ	1	
5	04911-00018		CLIP	ｸﾘｯﾌﾟ	2	
-	24329-46201		CLIP	ｸﾘｯﾌﾟ	2	[FC][RTL]
6	04911-00018		CLIP	ｸﾘｯﾌﾟ	2	
-	04911-00021		CLIP	ｸﾘｯﾌﾟ	2	[FC][RTL]
7	04913-21380		BAND	ﾊﾞﾝﾄﾞ	4	
8	23678-42401		BAND	ﾊﾞﾝﾄﾞ	4	
-	53675-54101		BAND	ﾊﾞﾝﾄﾞ	4	[FC][RTL]
A2	234A8-40701		VALVE-ASSY,CUT	ｶｯﾄﾊﾞﾙﾌﾞｱｯｾﾝ	1	INC.9-13
9	234A8-42602		PISTON	ﾋﾟｽﾄﾝ	1	
10	234A8-42611		SPRING	ｽﾌﾟﾘﾝｸﾞ	1	
11	234A8-42622		NIPPLE	ﾆｯﾌﾟﾙ	1	
12	02270-01014		PIN	ﾋﾟﾝ	1	
13	03320-00140		O-RING	Oﾘﾝｸﾞ	1	
14	23678-40060		HOSE,RH VM200	ﾎｰｽ	1	
-	23678-40070		HOSE,RH VM225	ﾎｰｽ	1	
-	23678-40085		HOSE,RH VM250	ﾎｰｽ	1	
-	23678-40095		HOSE,RH VM270	ﾎｰｽ	1	
-	23678-40095		HOSE,RH VM275	ﾎｰｽ	1	
-	23678-40110		HOSE,RH VM300	ﾎｰｽ	1	
-	23678-40120		HOSE,RH VM325	ﾎｰｽ	1	
-	23678-40125		HOSE,RH VM330	ﾎｰｽ	1	
-	23678-40135		HOSE,RH VM350	ﾎｰｽ	1	
-	23678-40145		HOSE,RH VM366	ﾎｰｽ	1	
-	23678-40145		HOSE,RH VM370	ﾎｰｽ	1	
-	23678-40145		HOSE,RH VM375	ﾎｰｽ	1	
-	23678-40165		HOSE,RH VM400	ﾎｰｽ	1	
-	23678-40175		HOSE,RH VM425	ﾎｰｽ	1	
-	23678-40190		HOSE,RH VM450	ﾎｰｽ	1	
-	23678-40200		HOSE,RH VM475	ﾎｰｽ	1	
-	23678-40215		HOSE,RH VM500	ﾎｰｽ	1	
-	23678-40245		HOSE,RH VM550	ﾎｰｽ	1	
-	23678-40270		HOSE,RH VM600	ﾎｰｽ	1	
-	04710-04060		HOSE,RH VM200	ﾎｰｽ	1	[FC][RTL]
-	04710-04070		HOSE,RH VM225	ﾎｰｽ	1	[FC][RTL]
-	04710-04085		HOSE,RH VM250	ﾎｰｽ	1	[FC][RTL]
-	04710-04095		HOSE,RH VM270	ﾎｰｽ	1	[FC][RTL]
-	04710-04095		HOSE,RH VM275	ﾎｰｽ	1	[FC][RTL]
-	04710-04110		HOSE,RH VM300	ﾎｰｽ	1	[FC][RTL]
-	04710-04120		HOSE,RH VM325	ﾎｰｽ	1	[FC][RTL]
-	04710-04125		HOSE,RH VM330	ﾎｰｽ	1	[FC][RTL]
-	04710-04135		HOSE,RH VM350	ﾎｰｽ	1	[FC][RTL]
-	04710-04145		HOSE,RH VM366	ﾎｰｽ	1	[FC][RTL]
-	04710-04145		HOSE,RH VM370	ﾎｰｽ	1	[FC][RTL]
-	04710-04145		HOSE,RH VM375	ﾎｰｽ	1	[FC][RTL]

FIG.244 MAST PIPING [VM39A]

(M5028420) マストパイピング

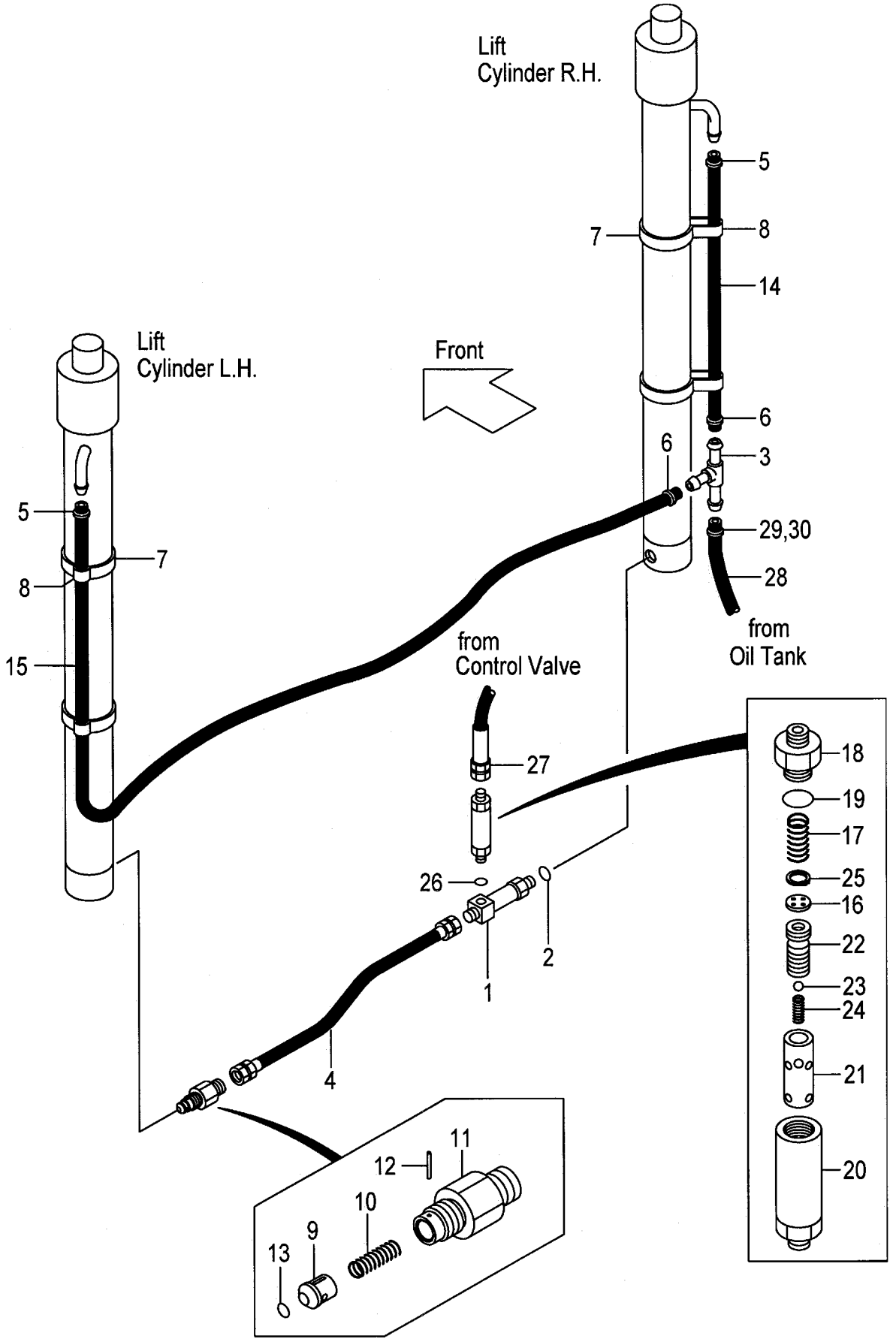

A:VM39A(2T)
B:VM39A(2.5T)

Item No	Part No.	Mark	Description		Req'd	Remarks : Serial No.
-	04710-04165		HOSE,RH VM400	ホース	1	[FC][RTL]
-	04710-04175		HOSE,RH VM425	ホース	1	[FC][RTL]
-	04710-04190		HOSE,RH VM450	ホース	1	[FC][RTL]
-	04710-04200		HOSE,RH VM475	ホース	1	[FC][RTL]
-	04710-04215		HOSE,RH VM500	ホース	1	[FC][RTL]
-	04710-04245		HOSE,RH VM550	ホース	1	[FC][RTL]
-	04710-04270		HOSE,RH VM600	ホース	1	[FC][RTL]
15	23678-40125		HOSE,LH VM200	ホース	1	
-	23678-40145		HOSE,LH VM225	ホース	1	
-	23678-40150		HOSE,LH VM250	ホース	1	
-	23678-40160		HOSE,LH VM270	ホース	1	
-	23678-40160		HOSE,LH VM275	ホース	1	
-	23678-40170		HOSE,LH VM300	ホース	1	
-	23678-40185		HOSE,LH VM325	ホース	1	
-	23678-40190		HOSE,LH VM330	ホース	1	
-	23678-40200		HOSE,LH VM350	ホース	1	
-	23678-40210		HOSE,LH VM366	ホース	1	
-	23678-40210		HOSE,LH VM370	ホース	1	
-	23678-40210		HOSE,LH VM375	ホース	1	
-	23678-40230		HOSE,LH VM400	ホース	1	
-	23678-40240		HOSE,LH VM425	ホース	1	
-	23678-40255		HOSE,LH VM450	ホース	1	
-	23678-40265		HOSE,LH VM475	ホース	1	
-	23678-40280		HOSE,LH VM500	ホース	1	
-	23678-40310		HOSE,LH VM550	ホース	1	
-	23678-40335		HOSE,LH VM600	ホース	1	
-	04710-04125		HOSE,LH VM200	ホース	1	[FC][RTL]
-	04710-04145		HOSE,LH VM225	ホース	1	[FC][RTL]
-	04710-04150		HOSE,LH VM250	ホース	1	[FC][RTL]
-	04710-04160		HOSE,LH VM270	ホース	1	[FC][RTL]
-	04710-04160		HOSE,LH VM275	ホース	1	[FC][RTL]
-	04710-04170		HOSE,LH VM300	ホース	1	[FC][RTL]
-	04710-04185		HOSE,LH VM325	ホース	1	[FC][RTL]
-	04710-04190		HOSE,LH VM330	ホース	1	[FC][RTL]
-	04710-04200		HOSE,LH VM350	ホース	1	[FC][RTL]
-	04710-04210		HOSE,LH VM366	ホース	1	[FC][RTL]
-	04710-04210		HOSE,LH VM370	ホース	1	[FC][RTL]
-	04710-04210		HOSE,LH VM375	ホース	1	[FC][RTL]
-	04710-04230		HOSE,LH VM400	ホース	1	[FC][RTL]
-	04710-04240		HOSE,LH VM425	ホース	1	[FC][RTL]
-	04710-04255		HOSE,LH VM450	ホース	1	[FC][RTL]
-	04710-04265		HOSE,LH VM475	ホース	1	[FC][RTL]
-	04710-04280		HOSE,LH VM500	ホース	1	[FC][RTL]
-	04710-04310		HOSE,LH VM550	ホース	1	[FC][RTL]
-	04710-04335		HOSE,LH VM600	ホース	1	[FC][RTL]
A3	234A8-41001		REGURATOR-ASSY,FLOW	ﾚｷﾞｭﾚｰﾀｱｯｾﾝ	1	INC.16-25
16	NO PART NO.	#	PLATE	ﾌﾟﾚｰﾄ	1	
17	27979-43101		SPRING	ｽﾌﾟﾘﾝｸﾞ	1	
18	NO PART NO.	#	NIPPLE	ﾆｯﾌﾟﾙ	1	
19	03320-00280		O-RING	Oﾘﾝｸﾞ	1	

FIG.244 MAST PIPING [VM39A]

(M5028420) マストパイピング

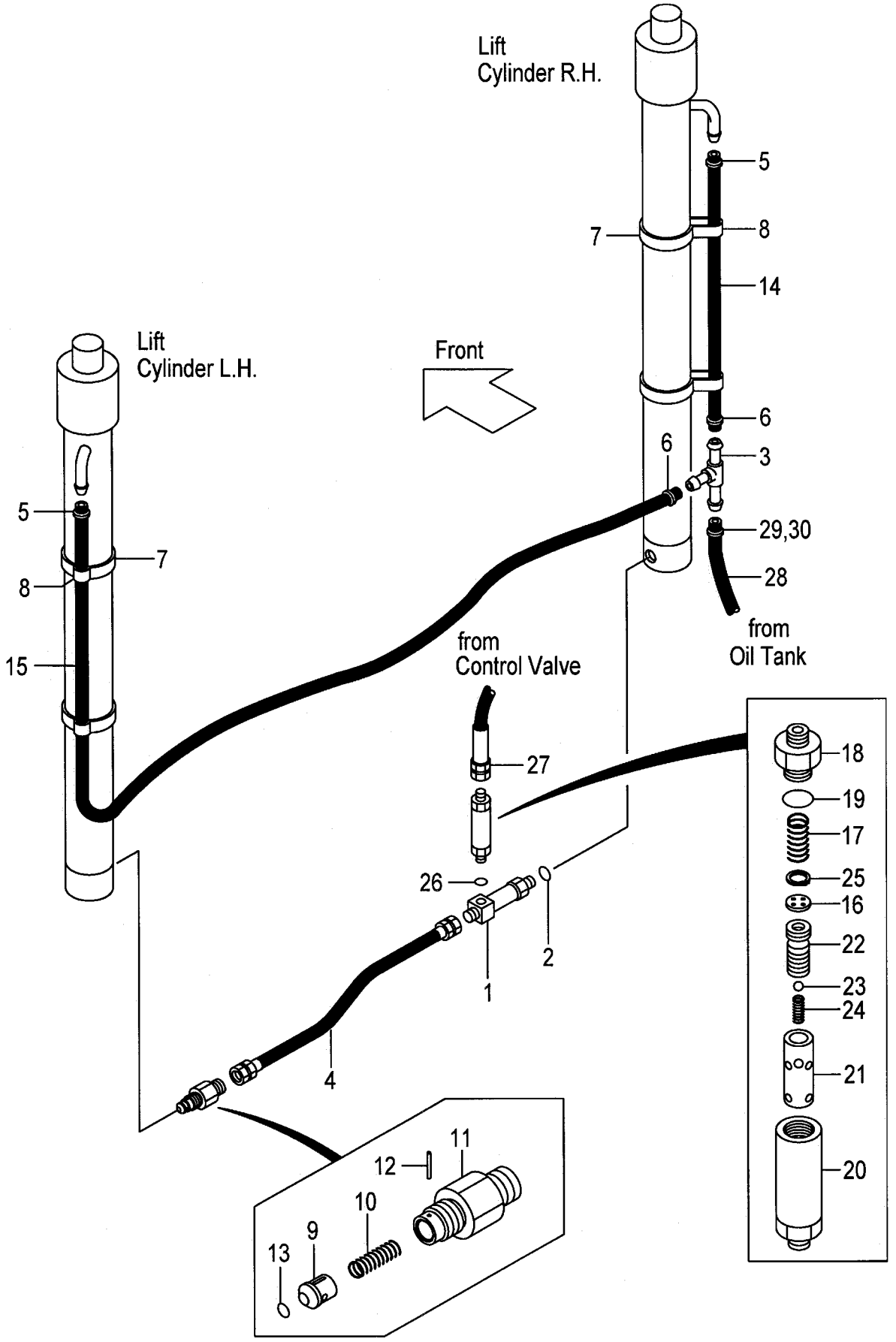

A:VM39A(2T)
B:VM39A(2.5T)

Item No	Part No.	Mark	Description		Req'd	Remarks : Serial No.
20	NO PART NO.	#	CASE	ケース	1	
21	NO PART NO.	#	SLEEVE	スリーブ	1	
22	NO PART NO.	#	PISTON	ピストン	1	
23	24459-42951		BALL,NYLON	ボール	1	
24	214A8-44151		SPRING	スプリング	1	
25	02110-00018		RING,SNAP	スナップリング	1	
26	03320-00180		O-RING	Oリング	1	
27	239A8-42001		HOSE	ホース	1	
28	23678-40110		HOSE	ホース	1	
-	04710-04125		HOSE	ホース	1	[FC][RTL]
29	04911-00018		CLIP	クリップ	1	
-	04911-00021		CLIP	クリップ	1	[FC][RTL]
30	04914-00016		CLIP	クリップ	1	
-	04911-00021		CLIP	クリップ	1	[FC][RTL]

FIG.245 FORK [VFM39A]

(M5028130) フォーク

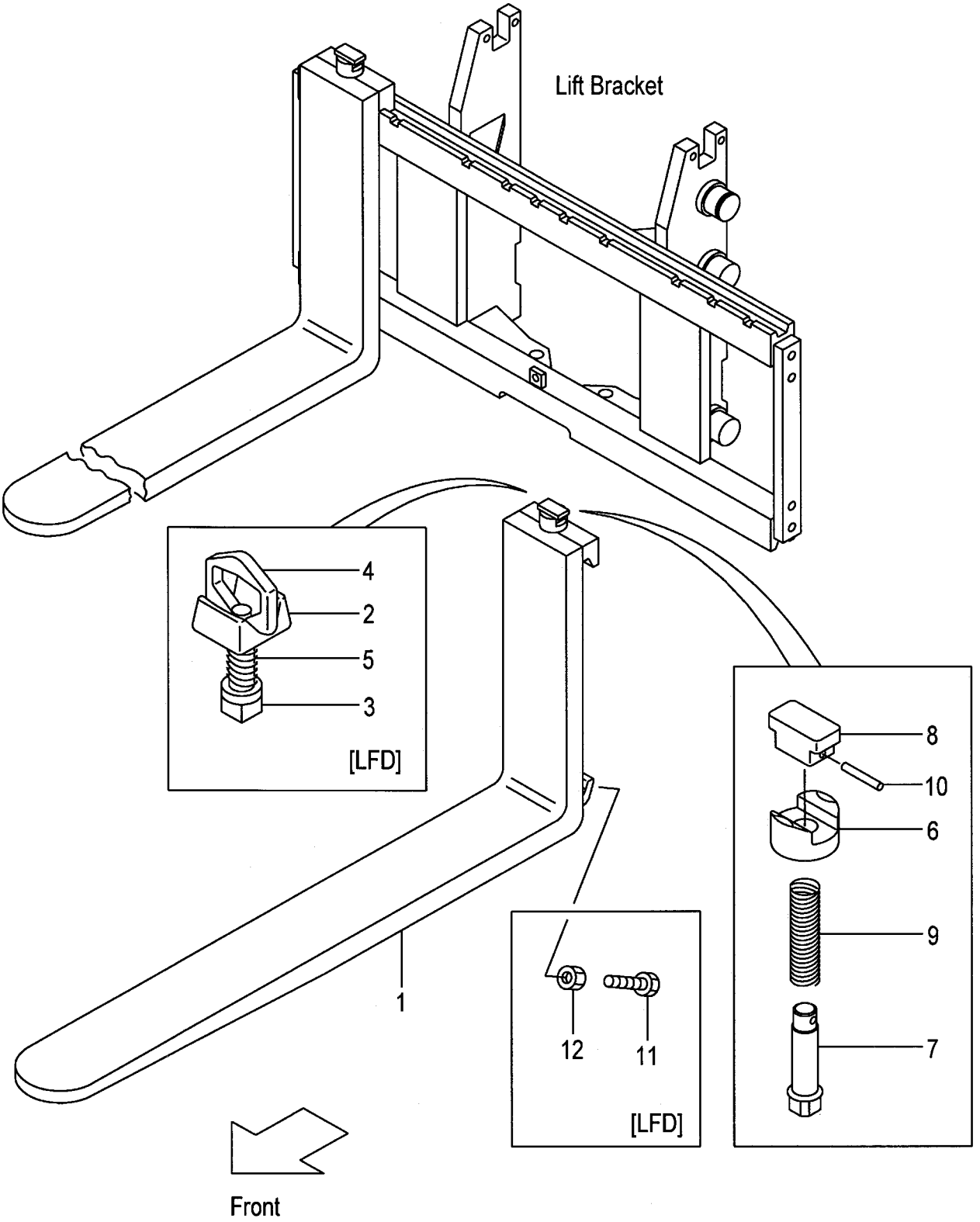

A:VFM39A(2T)
B:VFM39A(2.5T)

Item No	Part No.	Mark	Description		Req'd	Remarks : Serial No.
1	231A8-10101		FORK	ﾌｫｰｸ	2	A (L=920) INC.6-10
-	214A8-10512		FORK	ﾌｫｰｸ	2	B (L=1070) INC.6-10
-	214A8-10512		FORK	ﾌｫｰｸ	2	[EX] INC.6-10
-	LB24H8-10131		FORK	ﾌｫｰｸ	2	(L=1100)(EU PRODUCT ONLY) INC.6-10
-	231A8-10171		FORK	ﾌｫｰｸ	2	A [LF090] INC.6-10
-	231F8-10571		FORK	ﾌｫｰｸ	2	B [LF090] INC.6-10
-	231A8-10101		FORK	ﾌｫｰｸ	2	A [LF092] INC.6-10
-	231F8-10501		FORK	ﾌｫｰｸ	2	B [LF092] INC.6-10
-	214A8-10582		FORK	ﾌｫｰｸ	2	[LF100] INC.6-10
-	214A8-10512		FORK	ﾌｫｰｸ	2	[LF107] INC.6-10
-	214A8-10592		FORK	ﾌｫｰｸ	2	[LF110] INC.6-10
-	214A8-10602		FORK	ﾌｫｰｸ	2	[LF120] INC.6-10
-	214A8-10522		FORK	ﾌｫｰｸ	2	[LF122] INC.6-10
-	214A8-10612		FORK	ﾌｫｰｸ	2	[LF130] INC.6-10
-	214A8-10532		FORK	ﾌｫｰｸ	2	[LF137] INC.6-10
-	214A8-10622		FORK	ﾌｫｰｸ	2	[LF140] INC.6-10
-	214A8-10632		FORK	ﾌｫｰｸ	2	[LF150] INC.6-10
-	214A8-10542		FORK	ﾌｫｰｸ	2	[LF152] INC.6-10
-	214A8-10642		FORK	ﾌｫｰｸ	2	[LF160] INC.6-10
-	214A8-10552		FORK	ﾌｫｰｸ	2	[LF167] INC.6-10
-	214A8-10653		FORK	ﾌｫｰｸ	2	[LF170] INC.6-10
-	214A8-10663		FORK	ﾌｫｰｸ	2	[LF180] INC.6-10
-	214A8-10563		FORK	ﾌｫｰｸ	2	[LF182] INC.6-10
-	214A8-10673		FORK	ﾌｫｰｸ	2	[LF190] INC.6-10
-	214A8-10683		FORK	ﾌｫｰｸ	2	[LF200] INC.6-10
-	234A8-10571		FORK	ﾌｫｰｸ	2	[LFD090] INC.2-5
-	234A8-10501		FORK	ﾌｫｰｸ	2	[LFD092] INC.2-5
-	234A8-10581		FORK	ﾌｫｰｸ	2	[LFD100] INC.2-5
-	234A8-10511		FORK	ﾌｫｰｸ	2	[LFD107] INC.2-5
-	234A8-10591		FORK	ﾌｫｰｸ	2	[LFD110] INC.2-5
-	234A8-10601		FORK	ﾌｫｰｸ	2	[LFD120] INC.2-5
-	234A8-10521		FORK	ﾌｫｰｸ	2	[LFD122] INC.2-5
-	234A8-10611		FORK	ﾌｫｰｸ	2	[LFD130] INC.2-5
-	234A8-10531		FORK	ﾌｫｰｸ	2	[LFD137] INC.2-5
-	234A8-10621		FORK	ﾌｫｰｸ	2	[LFD140] INC.2-5
-	234A8-10631		FORK	ﾌｫｰｸ	2	[LFD150] INC.2-5
-	234A8-10541		FORK	ﾌｫｰｸ	2	[LFD152] INC.2-5
-	234A8-10641		FORK	ﾌｫｰｸ	2	[LFD160] INC.2-5
-	234A8-10551		FORK	ﾌｫｰｸ	2	[LFD167] INC.2-5
-	234A8-10652		FORK	ﾌｫｰｸ	2	[LFD170] INC.2-5
-	234A8-10662		FORK	ﾌｫｰｸ	2	[LFD180] INC.2-5
-	234A8-10562		FORK	ﾌｫｰｸ	2	[LFD182] INC.2-5
-	234A8-10672		FORK	ﾌｫｰｸ	2	[LFD190] INC.2-5

FIG.245 FORK [VFM39A]

(M5028130) フォーク

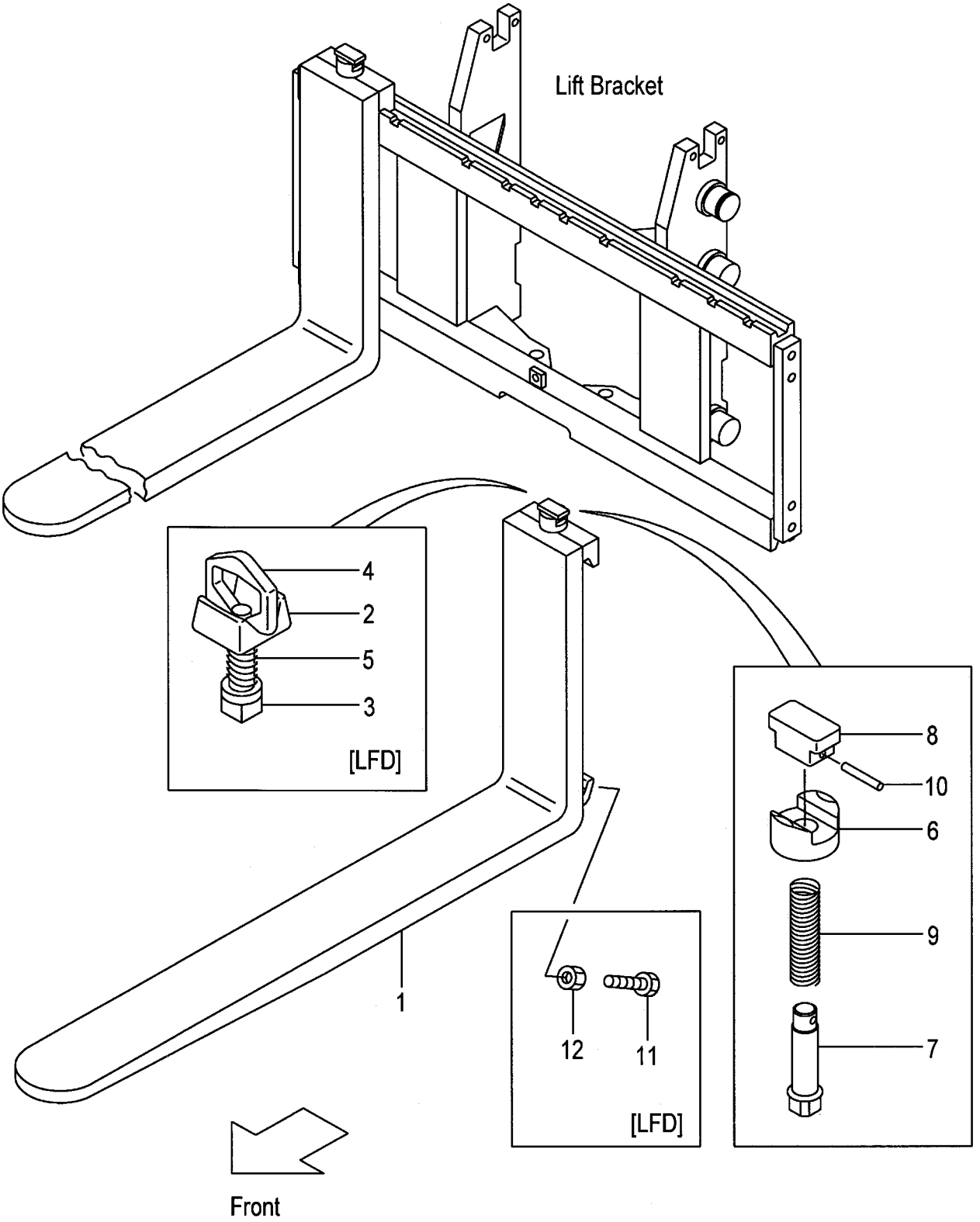

A:VFM39A(2T)
B:VFM39A(2.5T)

Item No	Part No.	Mark	Description		Req'd	Remarks : Serial No.
-	234A8-10682		FORK	ﾌｫｰｸ	2	[LFD200] INC.2-5
A1	214A8-11001		STOPPER-ASSY,FORK	ｽﾄｯﾊﾟｱｯｾﾝ	2	[LFD] INC.2-5
2	214A8-12001		HEAD,FORK	ﾍｯﾄﾞ	2	[LFD]
3	214A8-12011		STOPPER,FORK	ｽﾄｯﾊﾟ	2	[LFD]
4	214A8-12021		HANDLE	ﾊﾝﾄﾞﾙ	2	[LFD]
5	214A8-12031		SPRING	ｽﾌﾟﾘﾝｸﾞ	2	[LFD]
6	216G8-12921		HOLDER	ﾎﾙﾀﾞ	2	[LF]
7	231A8-12001		PIN	ﾋﾟﾝ	2	[LF]
8	231A8-12011		KNOB	ﾉﾌﾞ	2	[LF]
9	231A8-12021		SPRING	ｽﾌﾟﾘﾝｸﾞ	2	[LF]
10	231A8-12031		PIN,SPRING	ﾋﾟﾝ	2	[LF]
11	216G8-12101		BOLT	ﾎﾞﾙﾄ	4	[LFD]
12	01402-00010		NUT	ﾅｯﾄ	4	[LFD]

FIG.246 LIFT BRACKET [VFM39A]

(M5020610) リフトブラケット

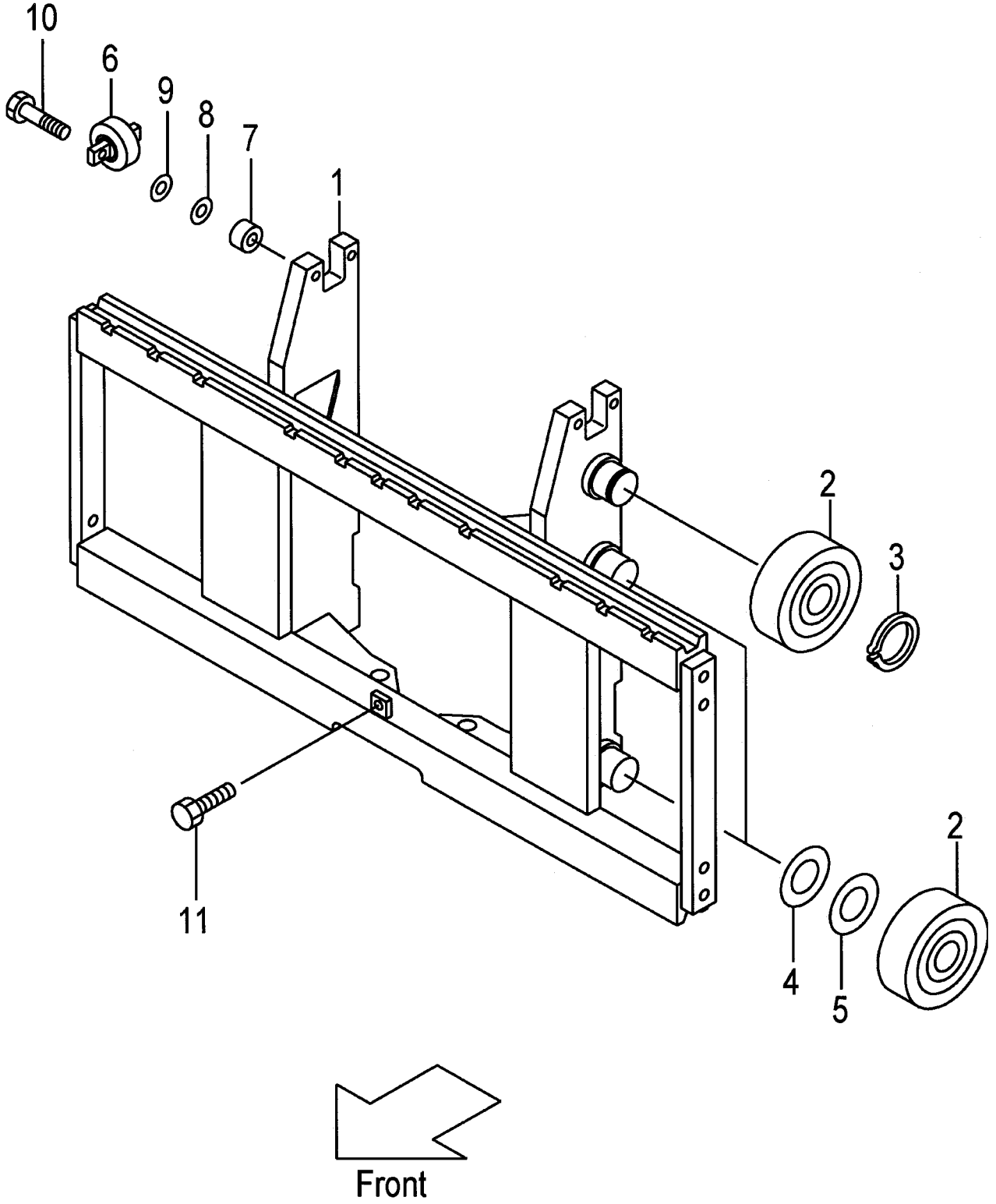

A:VFM39A(2T)
B:VFM39A(2.5T)

Item No	Part No.	Mark	Description		Req'd	Remarks : Serial No.
1	239A0-60101		BRACKET,LIFT	ﾌﾞﾗｹｯﾄ	1	
-	539A1-64101		BRACKET,LIFT	ﾌﾞﾗｹｯﾄ	1	[WFX110][WFX114][WFX127] [WFX135][WFX138]
-	539A1-64111		BRACKET,LIFT (L)	ﾌﾞﾗｹｯﾄ	1	[WFX135][WFX138][WFX145] [WFX146][WFX154][WFX180]
2	277P8-22051		ROLLER,END	ﾛｰﾗ	6	
-	277P8-22061		ROLLER,END	ﾛｰﾗ	(6)	
-	577P3-74001		ROLLER,END	ﾛｰﾗ	6	[FC][CS35][FCS35][FCS45]
-	577P3-74011		ROLLER,END	ﾛｰﾗ	(6)	[FC][CS35][FCS35][FCS45]
3	02100-00045		RING,SNAP	ｽﾅｯﾌﾟﾘﾝｸﾞ	2	
4	277P8-22071		SHIM,T-0.5	ｼﾑ	5	
5	277P8-22081		SHIM,T-1.0	ｼﾑ	5	
6	23458-32052		ROLLER,SIDE	ﾛｰﾗ	2	
-	514A3-71702		ROLLER,SIDE	ﾛｰﾗ	2	[FC][CS35][FCS35][FCS45]
7	22548-34031		SPACER	ｽﾍﾟｰｻ	4	
8	22548-34051		SHIM,T-0.5	ｼﾑ	5	
9	22548-34061		SHIM,T-1.0	ｼﾑ	5	
10	01184-12050		BOLT & WASHER	ﾎﾞﾙﾄ & ﾜｯｼｬ	4	
-	01184-12040		BOLT & WASHER	ﾎﾞﾙﾄ & ﾜｯｼｬ	4	[FC][CS35][FCS35][FCS45]
11	01184-12025		BOLT & WASHER	ﾎﾞﾙﾄ & ﾜｯｼｬ	1	

FIG.247 BACKREST [VFM39A]

(M5028250) ﾊﾞｯｸﾚｽﾄ

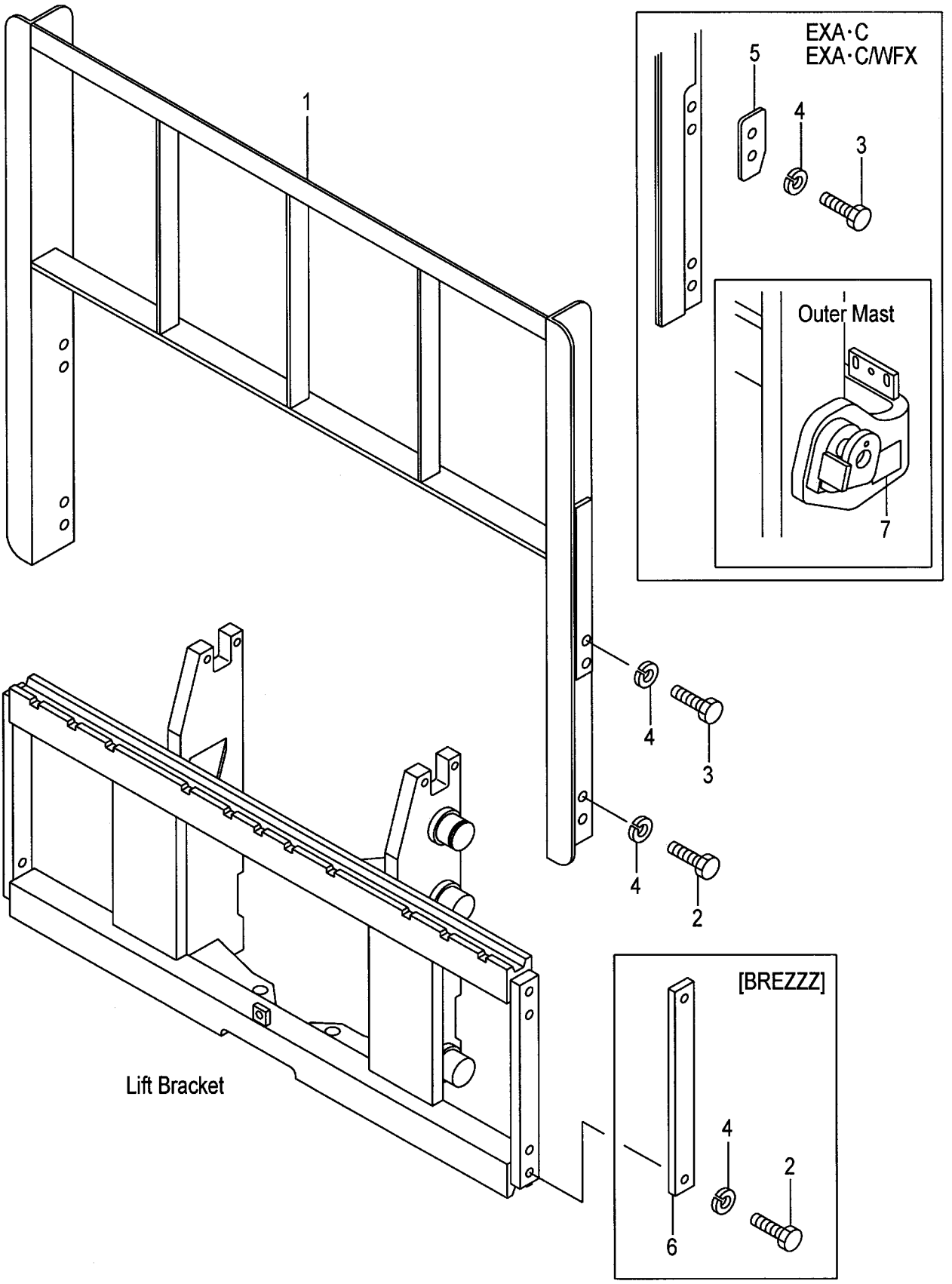

A:VFM39A(2T)
B:VFM39A(2.5T)

Item No	Part No.	Mark	Description		Req'd	Remarks : Serial No.
1	234A8-22202		BACKREST	ﾊﾞｯｸﾚｽﾄ	1	(WITHOUT BREZZZ)
-	534A2-74001		BACKREST	ﾊﾞｯｸﾚｽﾄ	1	[EXA][EXC]
-	239A8-20101		BACKREST	ﾊﾞｯｸﾚｽﾄ	1	[HBR110]
-	239A8-20111		BACKREST	ﾊﾞｯｸﾚｽﾄ	1	[HBR120]
-	239A8-20121		BACKREST	ﾊﾞｯｸﾚｽﾄ	1	[HBR130]
-	239A8-20131		BACKREST	ﾊﾞｯｸﾚｽﾄ	1	[HBR140]
-	239A8-20141		BACKREST	ﾊﾞｯｸﾚｽﾄ	1	[HBR150]
-	534A1-64402		BACKREST	ﾊﾞｯｸﾚｽﾄ	1	[WFX135]
-	534A1-64412		BACKREST	ﾊﾞｯｸﾚｽﾄ	1	[WFX146]
-	534A2-74101		BACKREST	ﾊﾞｯｸﾚｽﾄ	1	[WFX135/EXA][WFX135/EXC]
-	534A2-74201		BACKREST	ﾊﾞｯｸﾚｽﾄ	1	[WFX146/EXA][WFX146/EXC]
2	01100-14025		BOLT	ﾎﾞﾙﾄ	4	
-	01100-14030		BOLT	ﾎﾞﾙﾄ	4	[HBR]
3	01100-14030		BOLT	ﾎﾞﾙﾄ	4	(WITHOUT BREZZZ)
-	01100-14035		BOLT	ﾎﾞﾙﾄ	4	[EXA][EXC][WFX/EXA][WFX/EXC]
4	02010-00014		WASHER	ﾜｯｼｬ	8	
-	02010-00014		WASHER	ﾜｯｼｬ	4	[BREZZZ]
5	534A2-74051		PLATE,STOPPER	ﾌﾟﾚｰﾄ	2	[EXA][EXC][WFX/EXA][WFX/EXC]
6	23659-42161		PLATE	ﾌﾟﾚｰﾄ	2	[BREZZZ]
7	534A2-74301		DECAL,CAUTION	ﾃﾞｶﾙ	1	[EXA][EXC][WFX/EXA][WFX/EXC]

FIG.248 MAST [VFM39A]

(M5020410) マスト

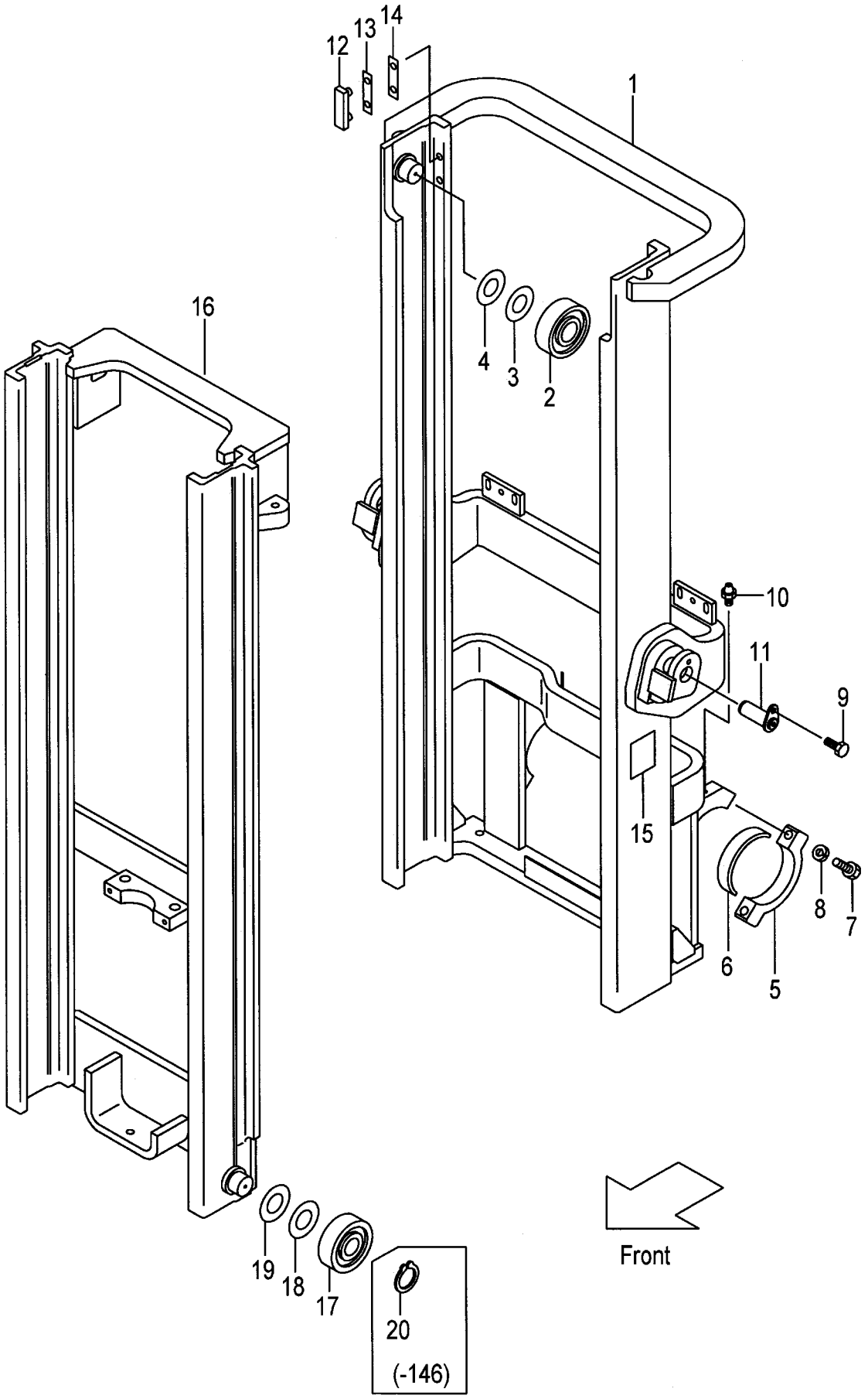

A:VFM39A(2T)
B:VFM39A(2.5T)

Item No	Part No.	Mark	Description		Req'd	Remarks : Serial No.
1	239A0-40011		MAST,OUTER VFM200	ｱｳﾀﾏｽﾄ	1	
-	239A0-40021		MAST,OUTER VFM225	ｱｳﾀﾏｽﾄ	1	
-	239A0-40031		MAST,OUTER VFM250	ｱｳﾀﾏｽﾄ	1	
-	239A0-40041		MAST,OUTER VFM270	ｱｳﾀﾏｽﾄ	1	
-	239A0-40051		MAST,OUTER VFM275	ｱｳﾀﾏｽﾄ	1	
-	239A0-40001		MAST,OUTER VFM300	ｱｳﾀﾏｽﾄ	1	
-	239A0-40061		MAST,OUTER VFM325	ｱｳﾀﾏｽﾄ	1	
-	239A0-40071		MAST,OUTER VFM330	ｱｳﾀﾏｽﾄ	1	
-	239A0-40081		MAST,OUTER VFM350	ｱｳﾀﾏｽﾄ	1	
-	239A0-40091		MAST,OUTER VFM366	ｱｳﾀﾏｽﾄ	1	
-	239A0-40101		MAST,OUTER VFM370	ｱｳﾀﾏｽﾄ	1	
-	239A0-40111		MAST,OUTER VFM375	ｱｳﾀﾏｽﾄ	1	
-	239A0-40121		MAST,OUTER VFM400	ｱｳﾀﾏｽﾄ	1	
-	239A0-40131		MAST,OUTER VFM425	ｱｳﾀﾏｽﾄ	1	
-	239A0-40141		MAST,OUTER VFM450	ｱｳﾀﾏｽﾄ	1	
-	239A0-40151		MAST,OUTER VFM475	ｱｳﾀﾏｽﾄ	1	
-	239A0-40161		MAST,OUTER VFM500	ｱｳﾀﾏｽﾄ	1	
-	239A0-40171		MAST,OUTER VFM550	ｱｳﾀﾏｽﾄ	1	
-	239A0-40181		MAST,OUTER VFM600	ｱｳﾀﾏｽﾄ	1	
-	539A3-91211		MAST,OUTER VFM200	ｱｳﾀﾏｽﾄ	1	[RW][HC][EXR]
-	539A3-91221		MAST,OUTER VFM225	ｱｳﾀﾏｽﾄ	1	[RW][HC][EXR]
-	539A3-91231		MAST,OUTER VFM250	ｱｳﾀﾏｽﾄ	1	[RW][HC][EXR]
-	539A3-91241		MAST,OUTER VFM270	ｱｳﾀﾏｽﾄ	1	[RW][HC][EXR]
-	539A3-91251		MAST,OUTER VFM275	ｱｳﾀﾏｽﾄ	1	[RW][HC][EXR]
-	539A3-91201		MAST,OUTER VFM300	ｱｳﾀﾏｽﾄ	1	[RW][HC][EXR]
-	539A3-91261		MAST,OUTER VFM325	ｱｳﾀﾏｽﾄ	1	[RW][HC][EXR]
-	539A3-91271		MAST,OUTER VFM330	ｱｳﾀﾏｽﾄ	1	[RW][HC][EXR]
-	539A3-91281		MAST,OUTER VFM350	ｱｳﾀﾏｽﾄ	1	[RW][HC][EXR]
-	539A3-91291		MAST,OUTER VFM366	ｱｳﾀﾏｽﾄ	1	[RW][HC][EXR]
-	539A3-91301		MAST,OUTER VFM370	ｱｳﾀﾏｽﾄ	1	[RW][HC][EXR]
-	539A3-91311		MAST,OUTER VFM375	ｱｳﾀﾏｽﾄ	1	[RW][HC][EXR]
-	539A3-91321		MAST,OUTER VFM400	ｱｳﾀﾏｽﾄ	1	[RW][HC][EXR]
-	539A3-91331		MAST,OUTER VFM425	ｱｳﾀﾏｽﾄ	1	[RW][HC][EXR]
-	539A3-91341		MAST,OUTER VFM450	ｱｳﾀﾏｽﾄ	1	[RW][HC][EXR]
-	539A3-91351		MAST,OUTER VFM475	ｱｳﾀﾏｽﾄ	1	[RW][HC][EXR]
-	539A3-91361		MAST,OUTER VFM500	ｱｳﾀﾏｽﾄ	1	[RW][HC][EXR]
-	539A3-91371		MAST,OUTER VFM550	ｱｳﾀﾏｽﾄ	1	[RW][HC][EXR]
-	539A3-91381		MAST,OUTER VFM600	ｱｳﾀﾏｽﾄ	1	[RW][HC][EXR]
2	277P8-22051		ROLLER,END	ﾛｰﾗ	2	
-	577P3-74001		ROLLER,END	ﾛｰﾗ	2	[FC][CS35][FCS35][FCS45] [FCS55]
3	277P8-22071		SHIM,T-0.5	ｼﾑ	12	
4	277P8-22081		SHIM,T-1.0	ｼﾑ	12	
5	22018-30065		CAP,MAST-SUPPORT	ｷｬｯﾌﾟ	2	MAST NO.1-114
-	277P8-32701		CAP	ｷｬｯﾌﾟ	2	MAST NO.115-
-	22018-30064		CAP,MAST-SUPPORT	ｷｬｯﾌﾟ	2	(EU PRODUCT ONLY)
6	214A8-02201		BUSHING	ﾌﾞｯｼﾝｸﾞ	2	
7	01103-16065		BOLT	ﾎﾞﾙﾄ	4	
8	02011-00016		WASHER	ﾜｯｼｬ	4	
9	216G8-52301		BOLT & WASHER	ﾎﾞﾙﾄ & ﾜｯｼｬ	2	

FIG.248 MAST [VFM39A]

(M5020410) マスト

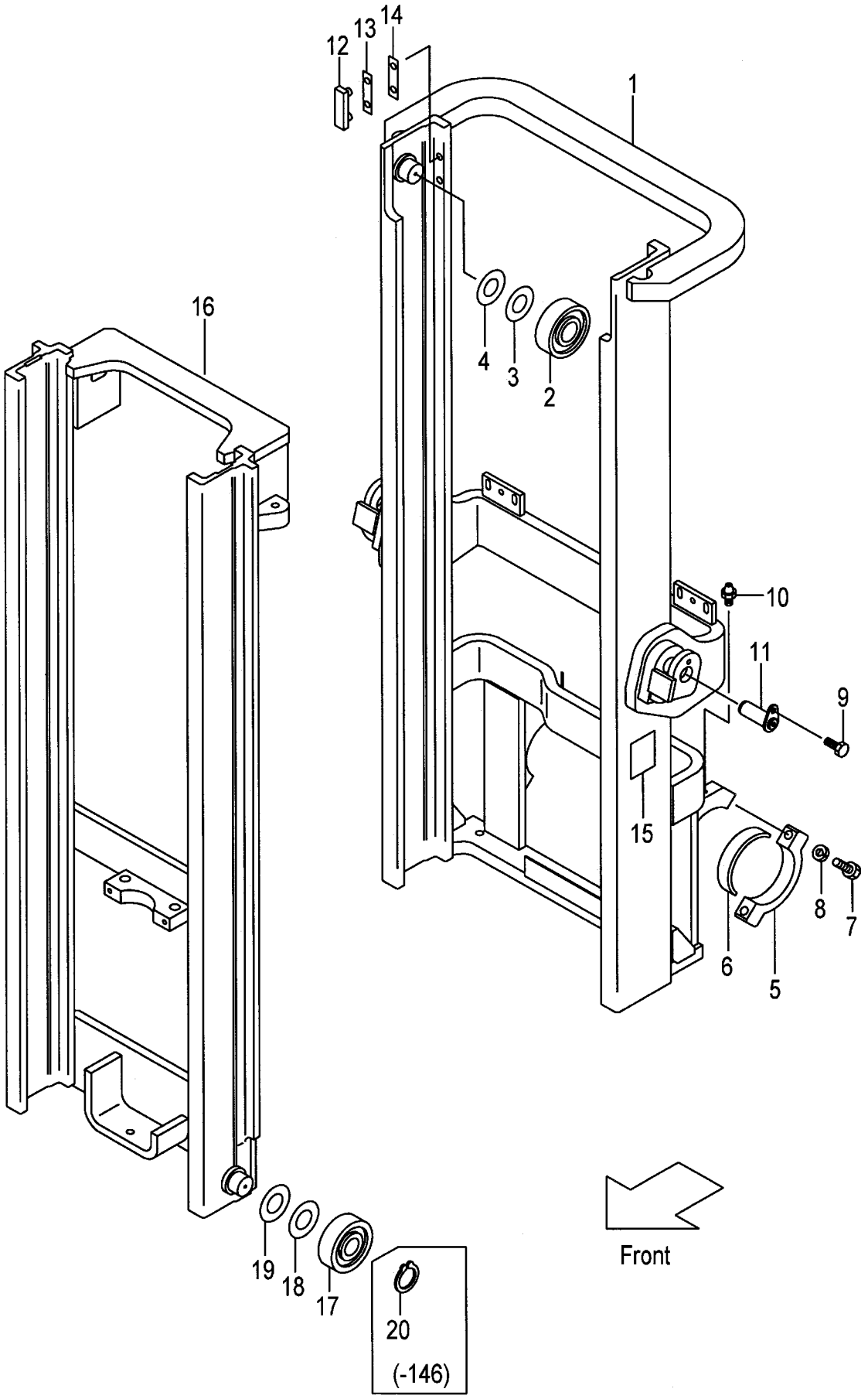

A:VFM39A(2T)
B:VFM39A(2.5T)

Item No	Part No.	Mark	Description		Req'd	Remarks : Serial No.
-	01184-10020		BOLT & WASHER	ﾎﾞﾙﾄ & ﾜｯｼｬ	2	(EU PRODUCT ONLY)
10	04901-00100		FITTING	ﾌｨｯﾃｨﾝｸﾞ	2	
11	272K8-52201		PIN	ﾋﾟﾝ	2	
-	234A8-02001		PIN	ﾋﾟﾝ	2	(EU PRODUCT ONLY)
12	216G8-33401		SLIPPER	ｽﾘｯﾊﾟ	2	
13	216G8-33361		SHIM,T-0.5	ｼﾑ	8	
14	216G8-33371		SHIM,T-1.0	ｼﾑ	4	
15	23678-06002		PLATE,NAME	ﾌﾟﾚｰﾄ	1	
16	231A0-40212		MAST,INNER VFM200	ｲﾝﾅﾏｽﾄ	1	
-	231A0-40222		MAST,INNER VFM225	ｲﾝﾅﾏｽﾄ	1	
-	231A0-40232		MAST,INNER VFM250	ｲﾝﾅﾏｽﾄ	1	
-	231A0-40242		MAST,INNER VFM270	ｲﾝﾅﾏｽﾄ	1	
-	231A0-40252		MAST,INNER VFM275	ｲﾝﾅﾏｽﾄ	1	
-	231A0-40202		MAST,INNER VFM300	ｲﾝﾅﾏｽﾄ	1	
-	231A0-40262		MAST,INNER VFM325	ｲﾝﾅﾏｽﾄ	1	
-	231A0-40272		MAST,INNER VFM330	ｲﾝﾅﾏｽﾄ	1	
-	231A0-40282		MAST,INNER VFM350	ｲﾝﾅﾏｽﾄ	1	
-	231A0-40292		MAST,INNER VFM366	ｲﾝﾅﾏｽﾄ	1	
-	231A0-40302		MAST,INNER VFM370	ｲﾝﾅﾏｽﾄ	1	
-	231A0-40312		MAST,INNER VFM375	ｲﾝﾅﾏｽﾄ	1	
-	231A0-40322		MAST,INNER VFM400	ｲﾝﾅﾏｽﾄ	1	
-	231A0-40332		MAST,INNER VFM425	ｲﾝﾅﾏｽﾄ	1	
-	231A0-40342		MAST,INNER VFM450	ｲﾝﾅﾏｽﾄ	1	
-	231A0-40352		MAST,INNER VFM475	ｲﾝﾅﾏｽﾄ	1	
-	231A0-40362		MAST,INNER VFM500	ｲﾝﾅﾏｽﾄ	1	
-	231A0-40372		MAST,INNER VFM550	ｲﾝﾅﾏｽﾄ	1	
-	231A0-40382		MAST,INNER VFM600	ｲﾝﾅﾏｽﾄ	1	
17	277P8-22051		ROLLER,END	ﾛｰﾗ	2	
-	577P3-74001		ROLLER,END	ﾛｰﾗ	2	[FC][CS35][FCS35][FCS45] [FCS55]
-	277P8-22061		ROLLER,END	ﾛｰﾗ	(2)	
-	577P3-74011		ROLLER,END	ﾛｰﾗ	(2)	[FC][CS35][FCS35][FCS45] [FCS55]
18	277P8-22071		SHIM,T-0.5	ｼﾑ	12	
-	277P8-22071		SHIM,T-0.5	ｼﾑ	10	[FC][CS35][FCS35][FCS45] [FCS55]
19	277P8-22081		SHIM,T-1.0	ｼﾑ	12	
-	277P8-22081		SHIM,T-1.0	ｼﾑ	10	[FC][CS35][FCS35][FCS45] [FCS55]
20	09192-30044		RING,SNAP	ｽﾅｯﾌﾟﾘﾝｸﾞ	2	MAST NO.1-146

FIG.249 TILT GAUGE [VFM39A/(TG,PPC,PR,PRC,MPC)]

(M5020420) ﾃｨﾙﾄｹﾞｰｼﾞ

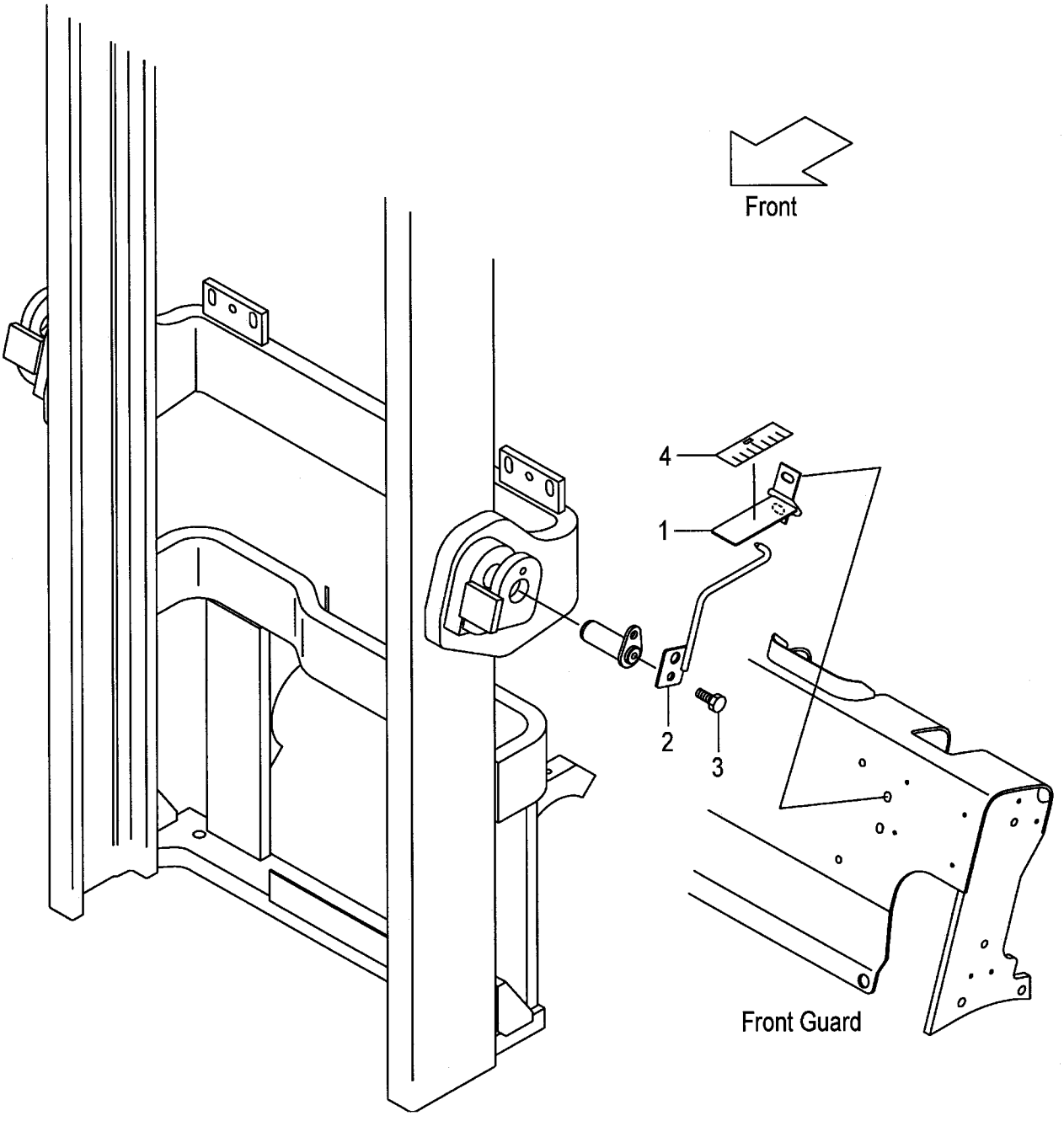

A:VFM39A(2T)
B:VFM39A(2.5T)

Item No	Part No.	Mark	Description		Req'd	Remarks : Serial No.
1	639A0-10011		GAUGE,TILT	ｹﾞｰｼﾞ	1	[TG/VFM250-600] [PPC/VFM250-600] [PR/VFM250-600]
-	639A0-10011		GAUGE,TILT	ｹﾞｰｼﾞ	1	[PRC/VFM250-600] [MPC/VFM250-600]
2	639A0-10051		INDICATOR	ｲﾝｼﾞｹｰﾀ	1	[TG/VFM250-600] [PPC/VFM250-600] [PR/VFM250-600]
-	639A0-10051		INDICATOR	ｲﾝｼﾞｹｰﾀ	1	[PRC/VFM250-600] [MPC/VFM250-600]
3	216G4-12251		BOLT	ﾎﾞﾙﾄ	1	[TG/VFM250-600] [PPC/VFM250-600] [PR/VFM250-600]
-	216G4-12251		BOLT	ﾎﾞﾙﾄ	1	[PRC/VFM250-600] [MPC/VFM250-600]
4	62459-23371		SEAL,GAUGE	ｼｰﾙ	1	[TG/VFM250-600] [PPC/VFM250-600] [PR/VFM250-600]
-	62459-23371		SEAL,GAUGE	ｼｰﾙ	1	[PRC/VFM250-600] [MPC/VFM250-600]

FIG.250 LIFT CYLINDER (FRONT)[VFM39A]

(M5020510) リフトシリンダ(フロント)

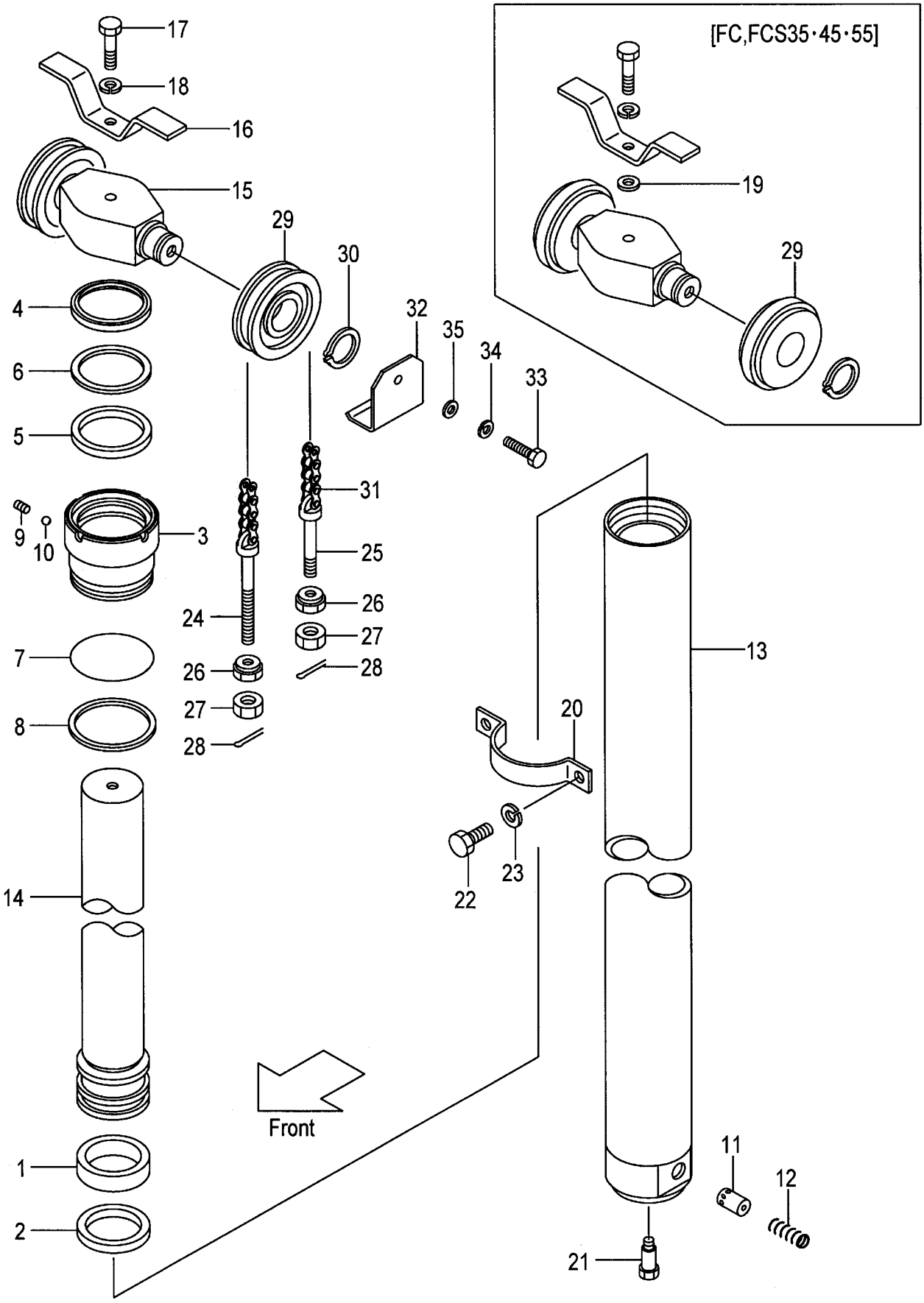

A:VFM39A(2T)
B:VFM39A(2.5T)

Item No	Part No.	Mark	Description		Req'd	Remarks : Serial No.
A1	277P0-50111		CYL-ASSY,LIFT VFM200	ｼﾘﾝﾀﾞｱｯｾﾝ	1	INC.1-14
-	277P0-50121		CYL-ASSY,LIFT VFM225	ｼﾘﾝﾀﾞｱｯｾﾝ	1	INC.1-14
-	277P0-50131		CYL-ASSY,LIFT VFM250	ｼﾘﾝﾀﾞｱｯｾﾝ	1	INC.1-14
-	277P0-50141		CYL-ASSY,LIFT VFM270	ｼﾘﾝﾀﾞｱｯｾﾝ	1	INC.1-14
-	277P0-50151		CYL-ASSY,LIFT VFM275	ｼﾘﾝﾀﾞｱｯｾﾝ	1	INC.1-14
-	277P0-50101		CYL-ASSY,LIFT VFM300	ｼﾘﾝﾀﾞｱｯｾﾝ	1	INC.1-14
-	277P0-50161		CYL-ASSY,LIFT VFM325	ｼﾘﾝﾀﾞｱｯｾﾝ	1	INC.1-14
-	277P0-50171		CYL-ASSY,LIFT VFM330	ｼﾘﾝﾀﾞｱｯｾﾝ	1	INC.1-14
-	277P0-50181		CYL-ASSY,LIFT VFM350	ｼﾘﾝﾀﾞｱｯｾﾝ	1	INC.1-14
-	277P0-50191		CYL-ASSY,LIFT VFM366	ｼﾘﾝﾀﾞｱｯｾﾝ	1	INC.1-14
-	277P0-50201		CYL-ASSY,LIFT VFM370	ｼﾘﾝﾀﾞｱｯｾﾝ	1	INC.1-14
-	277P0-50211		CYL-ASSY,LIFT VFM375	ｼﾘﾝﾀﾞｱｯｾﾝ	1	INC.1-14
-	277P0-50221		CYL-ASSY,LIFT VFM400	ｼﾘﾝﾀﾞｱｯｾﾝ	1	INC.1-14
-	277P0-50231		CYL-ASSY,LIFT VFM425	ｼﾘﾝﾀﾞｱｯｾﾝ	1	INC.1-14
-	277P0-50241		CYL-ASSY,LIFT VFM450	ｼﾘﾝﾀﾞｱｯｾﾝ	1	INC.1-14
-	277P0-50251		CYL-ASSY,LIFT VFM475	ｼﾘﾝﾀﾞｱｯｾﾝ	1	INC.1-14
-	277P0-50261		CYL-ASSY,LIFT VFM500	ｼﾘﾝﾀﾞｱｯｾﾝ	1	INC.1-14
-	277P0-50271		CYL-ASSY,LIFT VFM550	ｼﾘﾝﾀﾞｱｯｾﾝ	1	INC.1-14
-	277P0-50281		CYL-ASSY,LIFT VFM600	ｼﾘﾝﾀﾞｱｯｾﾝ	1	INC.1-14
1	22438-42641	*	WEARING	ｳｴｱﾘﾝｸﾞ	1	
2	53658-42011	*	RING,PISTON	ﾘﾝｸﾞ	1	
3	277P0-82061		CAP,CYL	ｷｬｯﾌﾟ	1	
4	27410-53201	*	SEAL,DUST	ｼｰﾙ	1	
5	23670-82251	*	PACKING	ﾊﾟｯｷﾝｸﾞ	1	
6	23670-82261	*	RING,BACK-UP	ﾘﾝｸﾞ	1	
7	03350-00850	*	O-RING	Oﾘﾝｸﾞ	1	
8	277P0-82071	*	RING,BACK-UP	ﾘﾝｸﾞ	1	
9	234A0-52611		PLUG	ﾌﾟﾗｸﾞ	1	
10	03190-00006		BALL	ﾎﾞｰﾙ	1	
11	229F0-82101		PISTON	ﾋﾟｽﾄﾝ	1	
12	24389-46021		SPRING	ｽﾌﾟﾘﾝｸﾞ	1	
13	277P0-50311		TUBE,CYL VFM200	ﾁｭｰﾌﾞ	1	
-	277P0-50321		TUBE,CYL VFM225	ﾁｭｰﾌﾞ	1	
-	277P0-50331		TUBE,CYL VFM250	ﾁｭｰﾌﾞ	1	
-	277P0-50341		TUBE,CYL VFM270	ﾁｭｰﾌﾞ	1	
-	277P0-50351		TUBE,CYL VFM275	ﾁｭｰﾌﾞ	1	
-	277P0-50301		TUBE,CYL VFM300	ﾁｭｰﾌﾞ	1	
-	277P0-50361		TUBE,CYL VFM325	ﾁｭｰﾌﾞ	1	
-	277P0-50371		TUBE,CYL VFM330	ﾁｭｰﾌﾞ	1	
-	277P0-50381		TUBE,CYL VFM350	ﾁｭｰﾌﾞ	1	
-	277P0-50391		TUBE,CYL VFM366	ﾁｭｰﾌﾞ	1	
-	277P0-80561		TUBE,CYL VFM370	ﾁｭｰﾌﾞ	1	
-	277P0-50411		TUBE,CYL VFM375	ﾁｭｰﾌﾞ	1	
-	277P0-50421		TUBE,CYL VFM400	ﾁｭｰﾌﾞ	1	
-	277P0-50431		TUBE,CYL VFM425	ﾁｭｰﾌﾞ	1	
-	277P0-50441		TUBE,CYL VFM450	ﾁｭｰﾌﾞ	1	
-	277P0-50451		TUBE,CYL VFM475	ﾁｭｰﾌﾞ	1	
-	277P0-50461		TUBE,CYL VFM500	ﾁｭｰﾌﾞ	1	
-	277P0-50471		TUBE,CYL VFM550	ﾁｭｰﾌﾞ	1	
-	277P0-50481		TUBE,CYL VFM600	ﾁｭｰﾌﾞ	1	

FIG.250 LIFT CYLINDER (FRONT)[VFM39A]

(M5020510) リフトシリンダ(フロント)

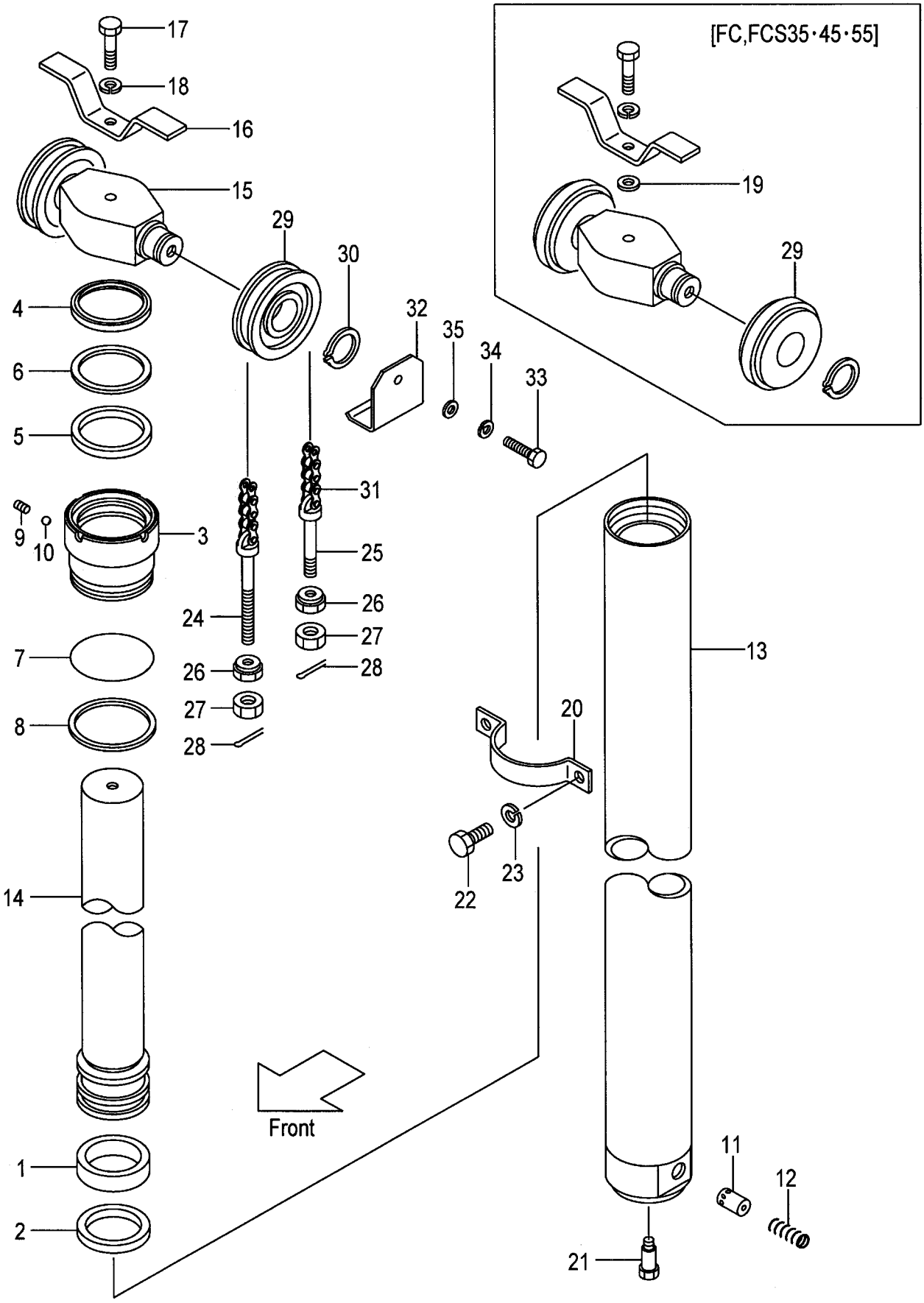

A:VFM39A(2T)
B:VFM39A(2.5T)

Item No	Part No.	Mark	Description		Req'd	Remarks : Serial No.
14	277P0-50511		ROD,PISTON VFM200	ﾛｯﾄﾞ	1	
-	277P0-50521		ROD,PISTON VFM225	ﾛｯﾄﾞ	1	
-	277P0-50531		ROD,PISTON VFM250	ﾛｯﾄﾞ	1	
-	277P0-50541		ROD,PISTON VFM270	ﾛｯﾄﾞ	1	
-	277P0-50551		ROD,PISTON VFM275	ﾛｯﾄﾞ	1	
-	277P0-50501		ROD,PISTON VFM300	ﾛｯﾄﾞ	1	
-	277P0-50561		ROD,PISTON VFM325	ﾛｯﾄﾞ	1	
-	277P0-50571		ROD,PISTON VFM330	ﾛｯﾄﾞ	1	
-	277P0-50581		ROD,PISTON VFM350	ﾛｯﾄﾞ	1	
-	277P0-50591		ROD,PISTON VFM366	ﾛｯﾄﾞ	1	
-	277P0-50601		ROD,PISTON VFM370	ﾛｯﾄﾞ	1	
-	277P0-50611		ROD,PISTON VFM375	ﾛｯﾄﾞ	1	
-	277P0-50621		ROD,PISTON VFM400	ﾛｯﾄﾞ	1	
-	277P0-50631		ROD,PISTON VFM425	ﾛｯﾄﾞ	1	
-	277P0-50641		ROD,PISTON VFM450	ﾛｯﾄﾞ	1	
-	277P0-50651		ROD,PISTON VFM475	ﾛｯﾄﾞ	1	
-	277P0-50661		ROD,PISTON VFM500	ﾛｯﾄﾞ	1	
-	277P0-50671		ROD,PISTON VFM550	ﾛｯﾄﾞ	1	
-	277P0-50681		ROD,PISTON VFM600	ﾛｯﾄﾞ	1	
15	277P0-82501		HEAD,PISTON	ﾍｯﾄﾞ	1	
16	214A0-82681		STOPPER,CHAIN	ｽﾄｯﾊﾟ	1	
17	01100-16075		BOLT	ﾎﾞﾙﾄ	1	
18	02010-00016		WASHER	ﾜｯｼｬ	1	
19	02000-20016		WASHER	ﾜｯｼｬ	1	[FC][FCS35][FCS45][FCS55]
20	214A0-82651		SUPPORT,CYL	ｻﾎﾟｰﾄ	1	
21	214A0-82831		BOLT	ﾎﾞﾙﾄ	1	
22	01103-10020		BOLT	ﾎﾞﾙﾄ	2	
23	02011-00010		WASHER	ﾜｯｼｬ	2	
24	52672-72231		PIN,ANCHOR	ﾋﾟﾝ	2	
-	22218-42111		PIN,ANCHOR	ﾋﾟﾝ	2	[FC][FCS35][FCS45][FCS55]
25	23500-82001		PIN,ANCHOR	ﾋﾟﾝ	2	
-	231A0-82001		PIN,ANCHOR	ﾋﾟﾝ	2	[FC][FCS35][FCS45][FCS55]
26	22218-40191		NUT	ﾅｯﾄ	4	
27	01400-00018		NUT	ﾅｯﾄ	4	
28	02200-03030		PIN	ﾋﾟﾝ	4	
29	234A8-43501		SHEAVE	ｼｰﾌﾞ	2	
-	22208-40031		SHEAVE	ｼｰﾌﾞ	2	[FC][FCS35][FCS45][FCS55]
30	02100-00040		RING,SNAP	ｽﾅｯﾌﾟﾘﾝｸﾞ	2	
31	22679-45611		CHAIN,LEAF VFM200	ﾁｪｰﾝ	2	
-	22679-45671		CHAIN,LEAF VFM225	ﾁｪｰﾝ	2	
-	22679-45711		CHAIN,LEAF VFM250	ﾁｪｰﾝ	2	
-	22679-45771		CHAIN,LEAF VFM270	ﾁｪｰﾝ	2	
-	22679-45791		CHAIN,LEAF VFM275	ﾁｪｰﾝ	2	
-	22679-45811		CHAIN,LEAF VFM300	ﾁｪｰﾝ	2	
-	22679-45891		CHAIN,LEAF VFM325	ﾁｪｰﾝ	2	
-	22679-45891		CHAIN,LEAF VFM330	ﾁｪｰﾝ	2	
-	22679-45951		CHAIN,LEAF VFM350	ﾁｪｰﾝ	2	
-	22679-45991		CHAIN,LEAF VFM366	ﾁｪｰﾝ	2	
-	22679-45991		CHAIN,LEAF VFM370	ﾁｪｰﾝ	2	
-	22679-46011		CHAIN,LEAF VFM375	ﾁｪｰﾝ	2	

FIG.250 LIFT CYLINDER (FRONT)[VFM39A]

(M5020510) リフトシリンダ(フロント)

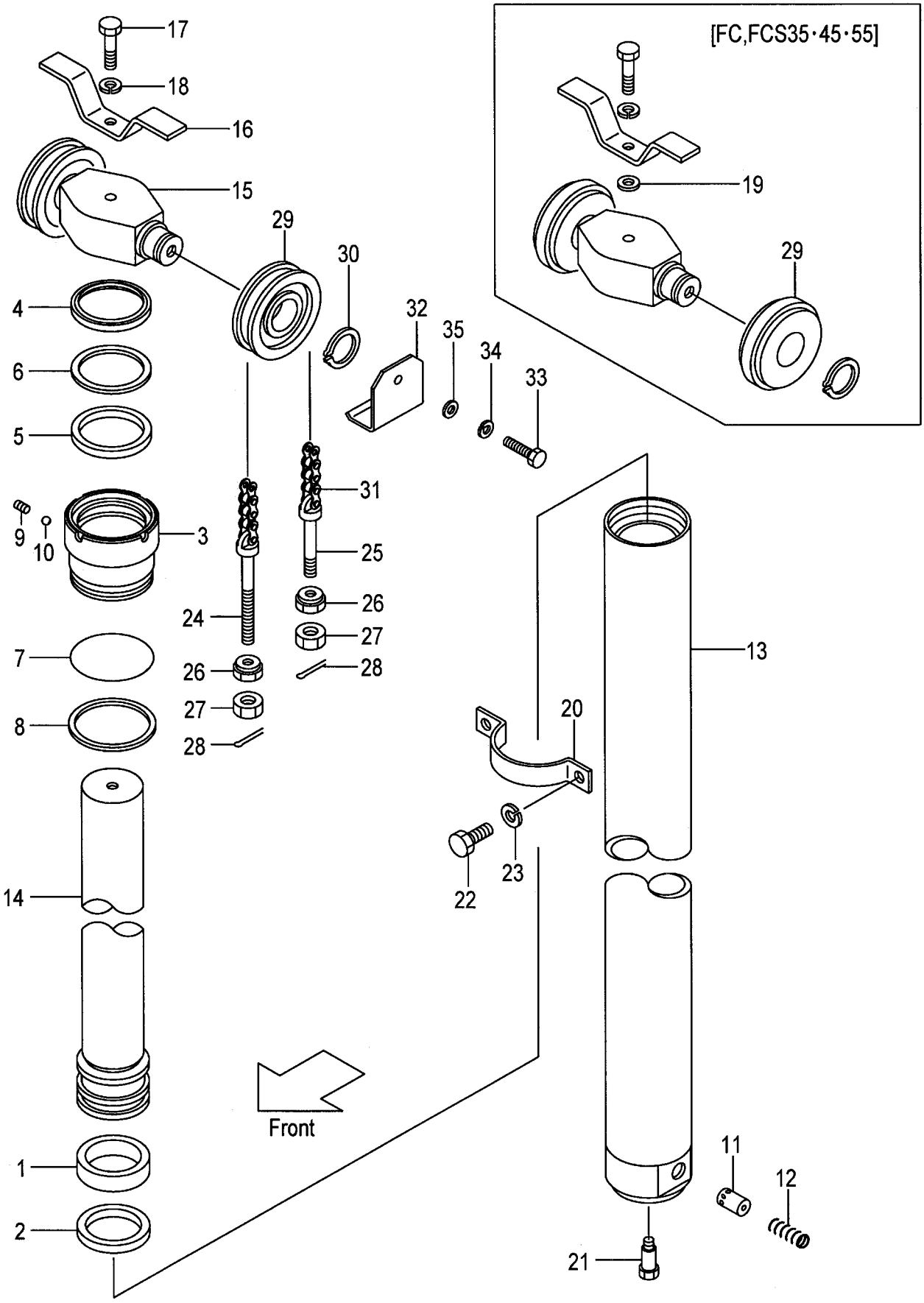

A:VFM39A(2T)
B:VFM39A(2.5T)

Item No	Part No.	Mark	Description		Req'd	Remarks : Serial No.
-	22679-46111		CHAIN,LEAF VFM400	ﾁｪｰﾝ	2	
-	22679-46171		CHAIN,LEAF VFM425	ﾁｪｰﾝ	2	
-	22679-46231		CHAIN,LEAF VFM450	ﾁｪｰﾝ	2	
-	22679-46311		CHAIN,LEAF VFM475	ﾁｪｰﾝ	2	
-	22679-46371		CHAIN,LEAF VFM500	ﾁｪｰﾝ	2	
-	22679-46531		CHAIN,LEAF VFM550	ﾁｪｰﾝ	2	
-	22679-46651		CHAIN,LEAF VFM600	ﾁｪｰﾝ	2	
-	09001-10035		CHAIN,ROLLER VFM200	ﾁｪｰﾝ	2	[FC][FCS35][FCS45][FCS55]
-	09001-10039		CHAIN,ROLLER VFM225	ﾁｪｰﾝ	2	[FC][FCS35][FCS45][FCS55]
-	09001-10041		CHAIN,ROLLER VFM250	ﾁｪｰﾝ	2	[FC][FCS35][FCS45][FCS55]
-	09001-10045		CHAIN,ROLLER VFM270	ﾁｪｰﾝ	2	[FC][FCS35][FCS45][FCS55]
-	09001-10045		CHAIN,ROLLER VFM275	ﾁｪｰﾝ	2	[FC][FCS35][FCS45][FCS55]
-	09001-10047		CHAIN,ROLLER VFM300	ﾁｪｰﾝ	2	[FC][FCS35][FCS45][FCS55]
-	09001-10051		CHAIN,ROLLER VFM325	ﾁｪｰﾝ	2	[FC][FCS35][FCS45][FCS55]
-	09001-10051		CHAIN,ROLLER VFM330	ﾁｪｰﾝ	2	[FC][FCS35][FCS45][FCS55]
-	09001-10055		CHAIN,ROLLER VFM350	ﾁｪｰﾝ	2	[FC][FCS35][FCS45][FCS55]
-	09001-10057		CHAIN,ROLLER VFM366	ﾁｪｰﾝ	2	[FC][FCS35][FCS45][FCS55]
-	09001-10059		CHAIN,ROLLER VFM370	ﾁｪｰﾝ	2	[FC][FCS35][FCS45][FCS55]
-	09001-10059		CHAIN,ROLLER VFM375	ﾁｪｰﾝ	2	[FC][FCS35][FCS45][FCS55]
-	09001-10065		CHAIN,ROLLER VFM400	ﾁｪｰﾝ	2	[FC][FCS35][FCS45][FCS55]
-	09001-10069		CHAIN,ROLLER VFM425	ﾁｪｰﾝ	2	[FC][FCS35][FCS45][FCS55]
-	09001-10073		CHAIN,ROLLER VFM450	ﾁｪｰﾝ	2	[FC][FCS35][FCS45][FCS55]
-	09001-10077		CHAIN,ROLLER VFM475	ﾁｪｰﾝ	2	[FC][FCS35][FCS45][FCS55]
-	09001-10081		CHAIN,ROLLER VFM500	ﾁｪｰﾝ	2	[FC][FCS35][FCS45][FCS55]
-	09001-10089		CHAIN,ROLLER VFM550	ﾁｪｰﾝ	2	[FC][FCS35][FCS45][FCS55]
-	09001-10097		CHAIN,ROLLER VFM600	ﾁｪｰﾝ	2	[FC][FCS35][FCS45][FCS55]
32	534A3-04001		COVER,CHAIN	ｶﾊﾞｰ	2	[EXE][EXN]
33	01100-16016		BOLT	ﾎﾞﾙﾄ	2	[EXE][EXN]
34	02010-00016		WASHER	ﾜｯｼｬ	2	[EXE][EXN]
35	02000-00016		WASHER	ﾜｯｼｬ	2	[EXE][EXN]
K1	277P0-59801		KIT,OVERHAUL	ｵｰﾊﾞﾎｰﾙｷｯﾄ	1	INC.1,2,4-8

FIG.251 LIFT CYLINDER (REAR) [VFM39A]

(M5020520) リフトシリンダ(リヤー)

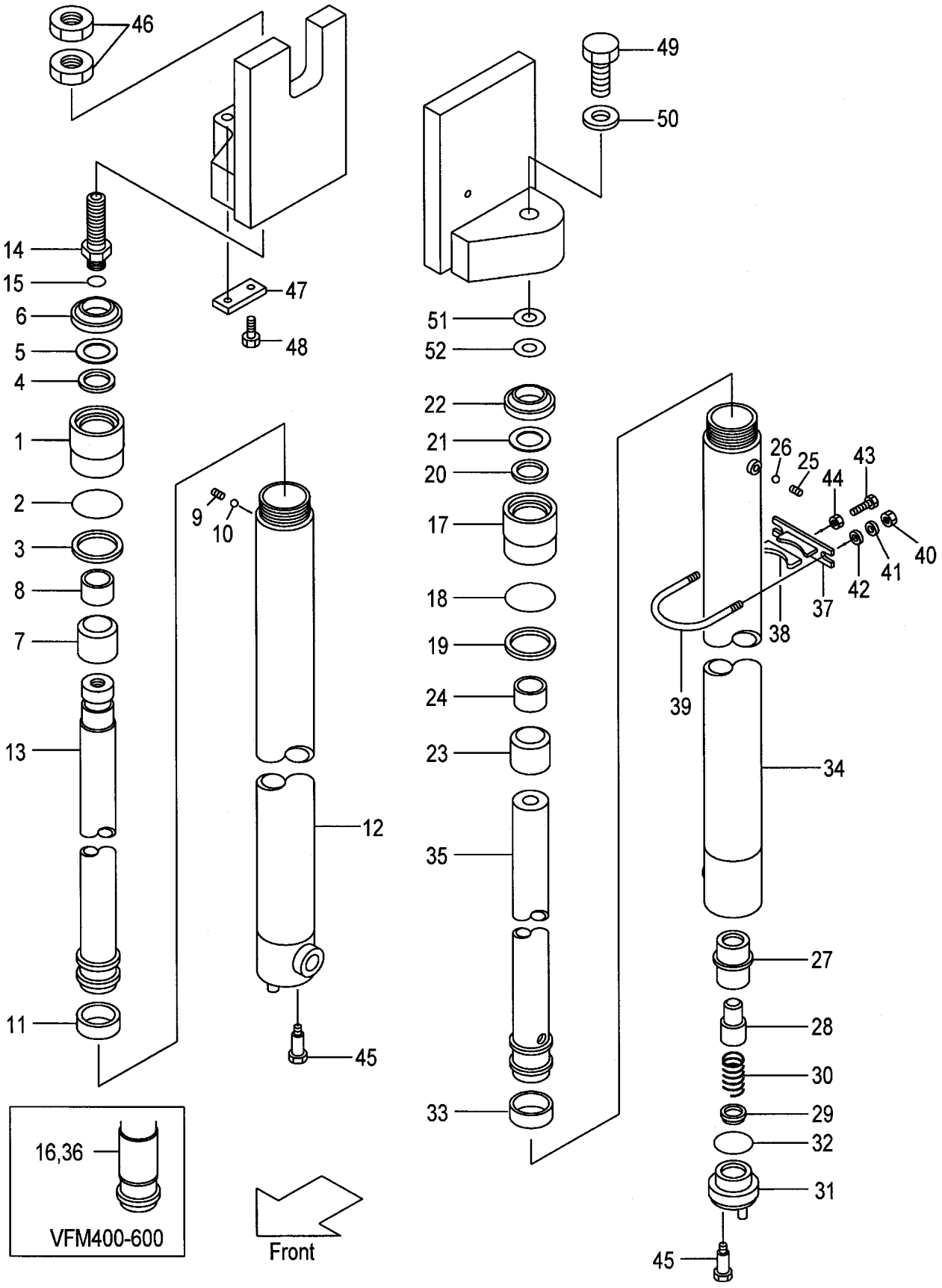

A:VFM39A(2T)
B:VFM39A(2.5T)

Item No	Part No.	Mark	Description		Req'd	Remarks : Serial No.
A1	234A0-50211		CYL-ASSY,LIFT,RH VFM200	シリンダアッセン	1	INC.1-15
-	234A0-50221		CYL-ASSY,LIFT,RH VFM225	シリンダアッセン	1	INC.1-15
-	234A0-50231		CYL-ASSY,LIFT,RH VFM250	シリンダアッセン	1	INC.1-15
-	234A0-50241		CYL-ASSY,LIFT,RH VFM270	シリンダアッセン	1	INC.1-15
-	234A0-50251		CYL-ASSY,LIFT,RH VFM275	シリンダアッセン	1	INC.1-15
-	234A0-50201		CYL-ASSY,LIFT,RH VFM300	シリンダアッセン	1	INC.1-15
-	234A0-50261		CYL-ASSY,LIFT,RH VFM325	シリンダアッセン	1	INC.1-15
-	234A0-50271		CYL-ASSY,LIFT,RH VFM330	シリンダアッセン	1	INC.1-15
-	234A0-50281		CYL-ASSY,LIFT,RH VFM350	シリンダアッセン	1	INC.1-15
-	234A0-50291		CYL-ASSY,LIFT,RH VFM366	シリンダアッセン	1	INC.1-15
-	234A0-50301		CYL-ASSY,LIFT,RH VFM370	シリンダアッセン	1	INC.1-15
-	234A0-50311		CYL-ASSY,LIFT,RH VFM375	シリンダアッセン	1	INC.1-15
-	234A0-50321		CYL-ASSY,LIFT,RH VFM400	シリンダアッセン	1	INC.1-16
-	234A0-50331		CYL-ASSY,LIFT,RH VFM425	シリンダアッセン	1	INC.1-16
-	234A0-50341		CYL-ASSY,LIFT,RH VFM450	シリンダアッセン	1	INC.1-16
-	234A0-50351		CYL-ASSY,LIFT,RH VFM475	シリンダアッセン	1	INC.1-16
-	234A0-50361		CYL-ASSY,LIFT,RH VFM500	シリンダアッセン	1	INC.1-16
-	234A0-50371		CYL-ASSY,LIFT,RH VFM550	シリンダアッセン	1	INC.1-16
-	234A0-50381		CYL-ASSY,LIFT,RH VFM600	シリンダアッセン	1	INC.1-16
1	234A0-52501		CAP,CYL	キャップ	1	
2	210F8-42631	*	O-RING	Oリング	1	
3	214A0-53681	*	RING,BACK-UP	リング	1	
4	23650-52851	*	U-PACKING	Uパッキング	1	
5	23650-52861	*	RING,BACK-UP	リング	1	
6	27410-53111	*	SEAL,DUST	シール	1	
7	234A0-52511		SLEEVE	スリーブ	1	
8	23650-52841		BUSHING	ブッシング	1	
9	234A0-52611		PLUG	プラグ	1	
10	03190-00006		BALL	ボール	1	
11	22580-53321	*	WEARING	ウエアリング	1	
12	234A0-50711		TUBE,RH VFM200	チューブ	1	

FIG.251 LIFT CYLINDER (REAR) [VFM39A]

(M5020520) リフトシリンダ(リヤー)

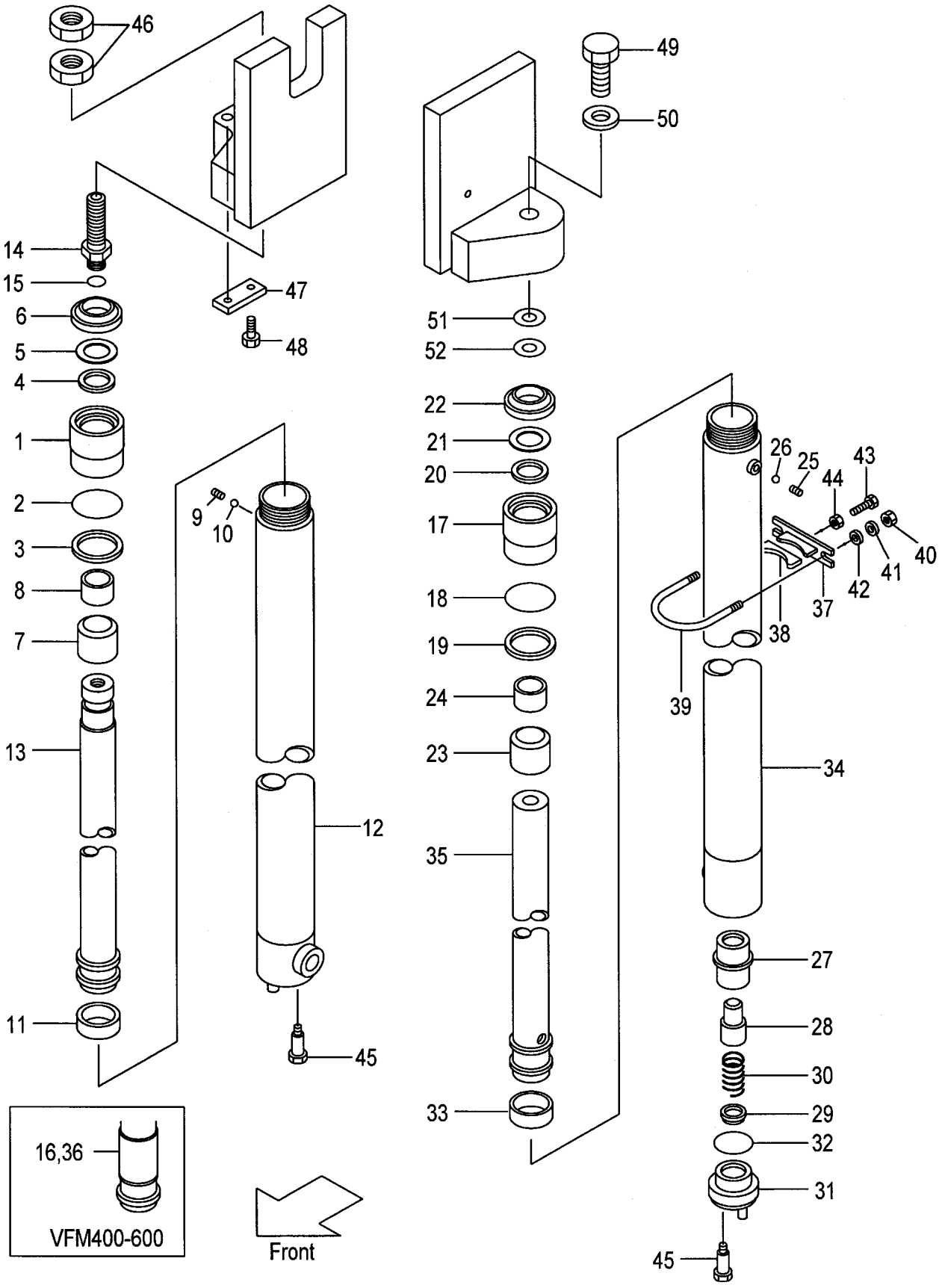

A:VFM39A(2T)
B:VFM39A(2.5T)

Item No	Part No.	Mark	Description		Req'd	Remarks : Serial No.
-	234A0-50721		TUBE,RH VFM225	ﾁｭｰﾌﾞ	1	
-	234A0-50731		TUBE,RH VFM250	ﾁｭｰﾌﾞ	1	
-	234A0-50741		TUBE,RH VFM270	ﾁｭｰﾌﾞ	1	
-	234A0-50751		TUBE,RH VFM275	ﾁｭｰﾌﾞ	1	
-	234A0-50701		TUBE,RH VFM300	ﾁｭｰﾌﾞ	1	
-	234A0-50761		TUBE,RH VFM325	ﾁｭｰﾌﾞ	1	
-	234A0-50771		TUBE,RH VFM330	ﾁｭｰﾌﾞ	1	
-	234A0-50781		TUBE,RH VFM350	ﾁｭｰﾌﾞ	1	
-	234A0-50791		TUBE,RH VFM366	ﾁｭｰﾌﾞ	1	
-	234A0-50801		TUBE,RH VFM370	ﾁｭｰﾌﾞ	1	
-	234A0-50811		TUBE,RH VFM375	ﾁｭｰﾌﾞ	1	
-	234A0-50821		TUBE,RH VFM400	ﾁｭｰﾌﾞ	1	
-	234A0-50831		TUBE,RH VFM425	ﾁｭｰﾌﾞ	1	
-	234A0-50841		TUBE,RH VFM450	ﾁｭｰﾌﾞ	1	
-	234A0-50851		TUBE,RH VFM475	ﾁｭｰﾌﾞ	1	
-	234A0-50861		TUBE,RH VFM500	ﾁｭｰﾌﾞ	1	
-	234A0-50871		TUBE,RH VFM550	ﾁｭｰﾌﾞ	1	
-	234A0-50881		TUBE,RH VFM600	ﾁｭｰﾌﾞ	1	
13	214A0-51711		ROD,PISTON,RH VFM200	ﾛｯﾄﾞ	1	
-	214A0-51721		ROD,PISTON,RH VFM225	ﾛｯﾄﾞ	1	
-	214A0-51731		ROD,PISTON,RH VFM250	ﾛｯﾄﾞ	1	
-	214A0-51741		ROD,PISTON,RH VFM270	ﾛｯﾄﾞ	1	
-	214A0-51751		ROD,PISTON,RH VFM275	ﾛｯﾄﾞ	1	
-	214A0-51701		ROD,PISTON,RH VFM300	ﾛｯﾄﾞ	1	
-	214A0-51761		ROD,PISTON,RH VFM325	ﾛｯﾄﾞ	1	
-	214A0-51771		ROD,PISTON,RH VFM330	ﾛｯﾄﾞ	1	
-	214A0-51781		ROD,PISTON,RH VFM350	ﾛｯﾄﾞ	1	
-	214A0-51791		ROD,PISTON,RH VFM366	ﾛｯﾄﾞ	1	
-	214A0-51801		ROD,PISTON,RH VFM370	ﾛｯﾄﾞ	1	
-	214A0-51811		ROD,PISTON,RH VFM375	ﾛｯﾄﾞ	1	
-	214A0-51821		ROD,PISTON,RH VFM400	ﾛｯﾄﾞ	1	
-	214A0-51831		ROD,PISTON,RH VFM425	ﾛｯﾄﾞ	1	
-	214A0-51841		ROD,PISTON,RH VFM450	ﾛｯﾄﾞ	1	
-	214A0-51851		ROD,PISTON,RH VFM475	ﾛｯﾄﾞ	1	
-	214A0-51861		ROD,PISTON,RH VFM500	ﾛｯﾄﾞ	1	
-	214A0-51871		ROD,PISTON,RH VFM550	ﾛｯﾄﾞ	1	
-	214A0-51881		ROD,PISTON,RH VFM600	ﾛｯﾄﾞ	1	
14	214A0-53721		NIPPLE	ﾆｯﾌﾟﾙ	1	
15	03320-00180	*	O-RING	Oﾘﾝｸﾞ	1	
16	214A0-53901		SPACER	ｽﾍﾟｰｻ	1	(VFM400-500)
-	214A0-53901		SPACER	ｽﾍﾟｰｻ	2	(VFM550-600)
A2	234A0-50011		CYL-ASSY,LIFT,LH VFM200	ｼﾘﾝﾀﾞｱｯｾﾝ	1	INC.17-35
-	234A0-50021		CYL-ASSY,LIFT,LH VFM225	ｼﾘﾝﾀﾞｱｯｾﾝ	1	INC.17-35
-	234A0-50031		CYL-ASSY,LIFT,LH VFM250	ｼﾘﾝﾀﾞｱｯｾﾝ	1	INC.17-35
-	234A0-50041		CYL-ASSY,LIFT,LH VFM270	ｼﾘﾝﾀﾞｱｯｾﾝ	1	INC.17-35

FIG.251 LIFT CYLINDER (REAR) [VFM39A]

(M5020520) リフトシリンダ(リヤー)

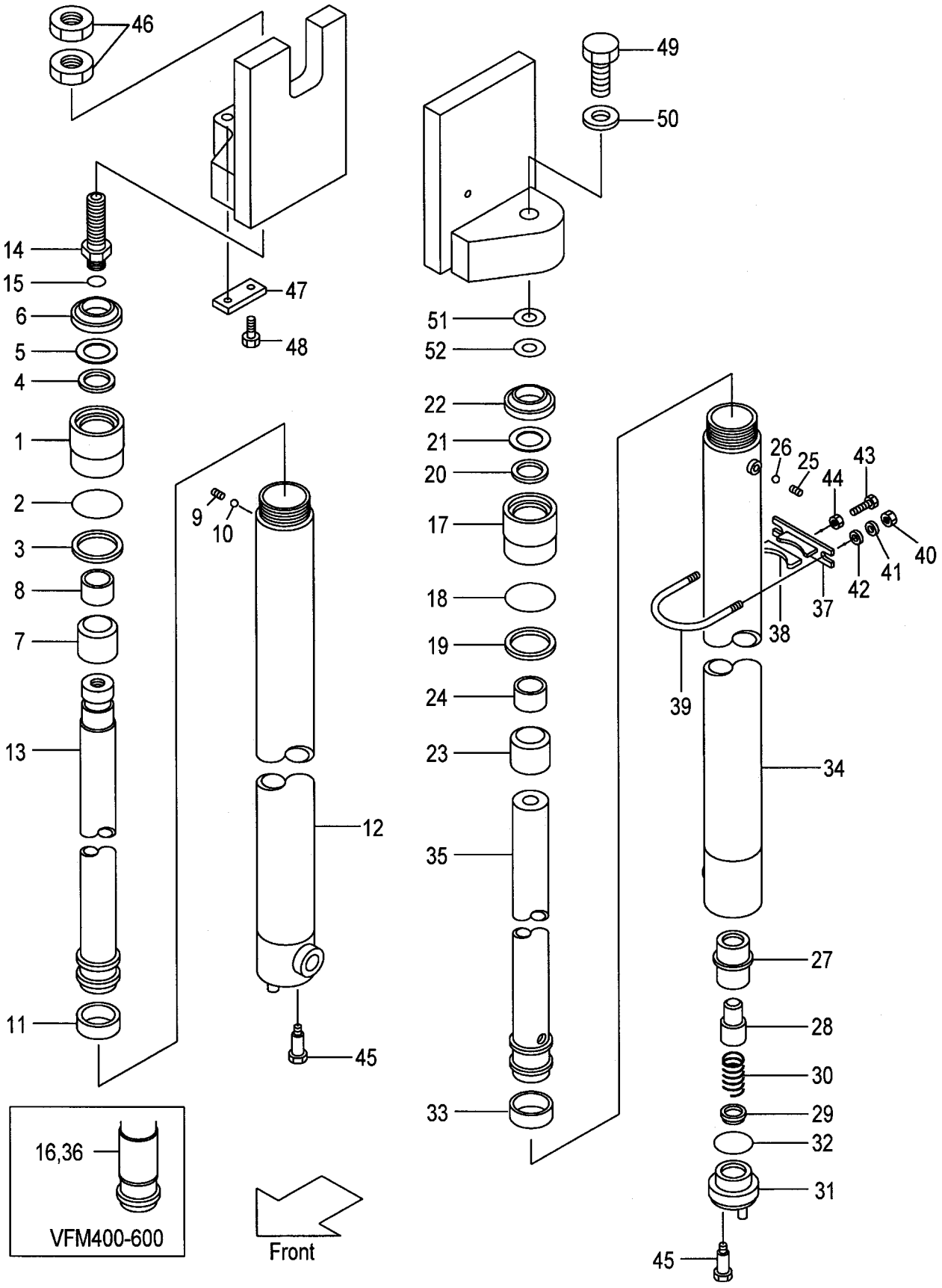

A:VFM39A(2T)
B:VFM39A(2.5T)

Item No	Part No.	Mark	Description		Req'd	Remarks : Serial No.
-	234A0-50051		CYL-ASSY,LIFT,LH VFM275	シリンダアッセン	1	INC.17-35
-	234A0-50001		CYL-ASSY,LIFT,LH VFM300	シリンダアッセン	1	INC.17-35
-	234A0-50061		CYL-ASSY,LIFT,LH VFM325	シリンダアッセン	1	INC.17-35
-	234A0-50071		CYL-ASSY,LIFT,LH VFM330	シリンダアッセン	1	INC.17-35
-	234A0-50081		CYL-ASSY,LIFT,LH VFM350	シリンダアッセン	1	INC.17-35
-	234A0-50091		CYL-ASSY,LIFT,LH VFM366	シリンダアッセン	1	INC.17-35
-	234A0-50101		CYL-ASSY,LIFT,LH VFM370	シリンダアッセン	1	INC.17-35
-	234A0-50111		CYL-ASSY,LIFT,LH VFM375	シリンダアッセン	1	INC.17-35
-	234A0-50121		CYL-ASSY,LIFT,LH VFM400	シリンダアッセン	1	INC.17-36
-	234A0-50131		CYL-ASSY,LIFT,LH VFM425	シリンダアッセン	1	INC.17-36
-	234A0-50141		CYL-ASSY,LIFT,LH VFM450	シリンダアッセン	1	INC.17-36
-	234A0-50151		CYL-ASSY,LIFT,LH VFM475	シリンダアッセン	1	INC.17-36
-	234A0-50161		CYL-ASSY,LIFT,LH VFM500	シリンダアッセン	1	INC.17-36
-	234A0-50171		CYL-ASSY,LIFT,LH VFM550	シリンダアッセン	1	INC.17-36
-	234A0-50181		CYL-ASSY,LIFT,LH VFM600	シリンダアッセン	1	INC.17-36
17	234A0-52501		CAP,CYL	キャップ	1	
18	210F8-42631	*	O-RING	Oリング	1	
19	214A0-53681	*	RING,BACK-UP	リング	1	
20	23650-52851	*	U-PACKING	Uパッキング	1	
21	23650-52861	*	RING,BACK-UP	リング	1	
22	27410-53111	*	SEAL,DUST	シール	1	
23	234A0-52511		SLEEVE	スリーブ	1	
24	23650-52841		BUSHING	ブッシング	1	
25	234A0-52611		PLUG	プラグ	1	
26	03190-00006		BALL	ボール	1	
27	53658-43021		SLEEVE	スリーブ	1	
28	53658-43011		PISTON	ピストン	1	
29	53658-43001		CHECK	チェック	1	
30	53658-43031		SPRING	スプリング	1	
31	53658-43041		PLUG	プラグ	1	
32	03320-00340	*	O-RING	Oリング	1	
33	22580-53321	*	WEARING	ウエアリング	1	
34	234A0-50511		TUBE,LH VFM200	チューブ	1	
-	234A0-50521		TUBE,LH VFM225	チューブ	1	
-	234A0-50531		TUBE,LH VFM250	チューブ	1	

FIG.251 LIFT CYLINDER (REAR) [VFM39A]

(M5020520) リフトシリンダ(リヤー)

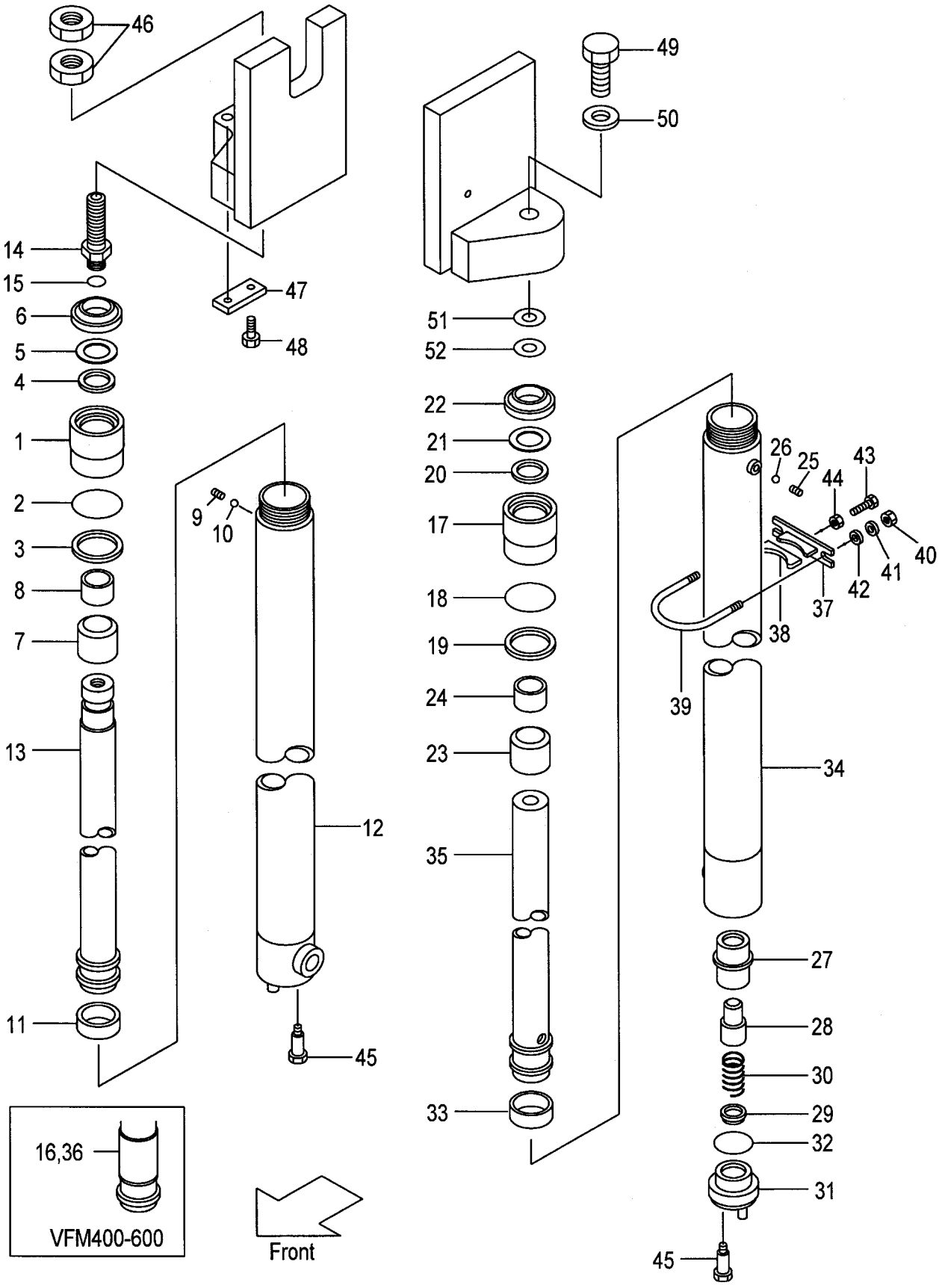

A:VFM39A(2T)
B:VFM39A(2.5T)

Item No	Part No.	Mark	Description		Req'd	Remarks : Serial No.
-	234A0-50541		TUBE,LH VFM270	ﾁｭｰﾌﾞ	1	
-	234A0-50551		TUBE,LH VFM275	ﾁｭｰﾌﾞ	1	
-	234A0-50501		TUBE,LH VFM300	ﾁｭｰﾌﾞ	1	
-	234A0-50561		TUBE,LH VFM325	ﾁｭｰﾌﾞ	1	
-	234A0-50571		TUBE,LH VFM330	ﾁｭｰﾌﾞ	1	
-	234A0-50581		TUBE,LH VFM350	ﾁｭｰﾌﾞ	1	
-	234A0-50591		TUBE,LH VFM366	ﾁｭｰﾌﾞ	1	
-	234A0-50601		TUBE,LH VFM370	ﾁｭｰﾌﾞ	1	
-	234A0-50611		TUBE,LH VFM375	ﾁｭｰﾌﾞ	1	
-	234A0-50621		TUBE,LH VFM400	ﾁｭｰﾌﾞ	1	
-	234A0-50631		TUBE,LH VFM425	ﾁｭｰﾌﾞ	1	
-	234A0-50641		TUBE,LH VFM450	ﾁｭｰﾌﾞ	1	
-	234A0-50651		TUBE,LH VFM475	ﾁｭｰﾌﾞ	1	
-	234A0-50661		TUBE,LH VFM500	ﾁｭｰﾌﾞ	1	
-	234A0-50671		TUBE,LH VFM550	ﾁｭｰﾌﾞ	1	
-	234A0-50681		TUBE,LH VFM600	ﾁｭｰﾌﾞ	1	
35	229F0-51211		ROD,PISTON,LH VFM200	ﾛｯﾄﾞ	1	
-	229F0-51221		ROD,PISTON,LH VFM225	ﾛｯﾄﾞ	1	
-	229F0-51231		ROD,PISTON,LH VFM250	ﾛｯﾄﾞ	1	
-	229F0-51241		ROD,PISTON,LH VFM270	ﾛｯﾄﾞ	1	
-	229F0-51251		ROD,PISTON,LH VFM275	ﾛｯﾄﾞ	1	
-	229F0-51201		ROD,PISTON,LH VFM300	ﾛｯﾄﾞ	1	
-	229F0-51261		ROD,PISTON,LH VFM325	ﾛｯﾄﾞ	1	
-	229F0-51271		ROD,PISTON,LH VFM330	ﾛｯﾄﾞ	1	
-	229F0-51281		ROD,PISTON,LH VFM350	ﾛｯﾄﾞ	1	
-	229F0-51291		ROD,PISTON,LH VFM366	ﾛｯﾄﾞ	1	
-	229F0-51301		ROD,PISTON,LH VFM370	ﾛｯﾄﾞ	1	
-	229F0-51311		ROD,PISTON,LH VFM375	ﾛｯﾄﾞ	1	
-	229F0-51321		ROD,PISTON,LH VFM400	ﾛｯﾄﾞ	1	
-	229F0-51331		ROD,PISTON,LH VFM425	ﾛｯﾄﾞ	1	
-	229F0-51341		ROD,PISTON,LH VFM450	ﾛｯﾄﾞ	1	
-	229F0-51351		ROD,PISTON,LH VFM475	ﾛｯﾄﾞ	1	
-	229F0-51361		ROD,PISTON,LH VFM500	ﾛｯﾄﾞ	1	
-	229F0-51371		ROD,PISTON,LH VFM550	ﾛｯﾄﾞ	1	
-	229F0-51381		ROD,PISTON,LH VFM600	ﾛｯﾄﾞ	1	
36	214A0-53901		SPACER	ｽﾍﾟｰｻ	1	(VFM400-500)
-	214A0-53901		SPACER	ｽﾍﾟｰｻ	2	(VFM550-600)
A3	215E8-42171		SUPPORT-ASSY	ｻﾎﾟｰﾄｱｯｾﾝ	2	INC.37,38
37	215E8-42181		SUPPORT	ｻﾎﾟｰﾄ	1	
38	24868-42111		RUBBER	ﾗﾊﾞｰ	1	
39	234A8-42551		U-BOLT	Uﾎﾞﾙﾄ	2	
40	234A8-42561		NUT	ﾅｯﾄ	4	
41	02010-20010		WASHER	ﾜｯｼｬ	4	
42	02000-20010		WASHER	ﾜｯｼｬ	4	
43	232A8-42201		BOLT	ﾎﾞﾙﾄ	2	
44	234A8-42571		NUT	ﾅｯﾄ	2	
45	214A8-42661		BOLT	ﾎﾞﾙﾄ	2	
46	24320-52001		NUT,RH	ﾅｯﾄ	2	
47	23648-50161		PLATE,KEY,RH	ﾌﾟﾚｰﾄ	1	
48	01184-10020		BOLT,RH	ﾎﾞﾙﾄ	2	

FIG.251 LIFT CYLINDER (REAR) [VFM39A]

(M5020520) リフトシリンダ(リヤー)

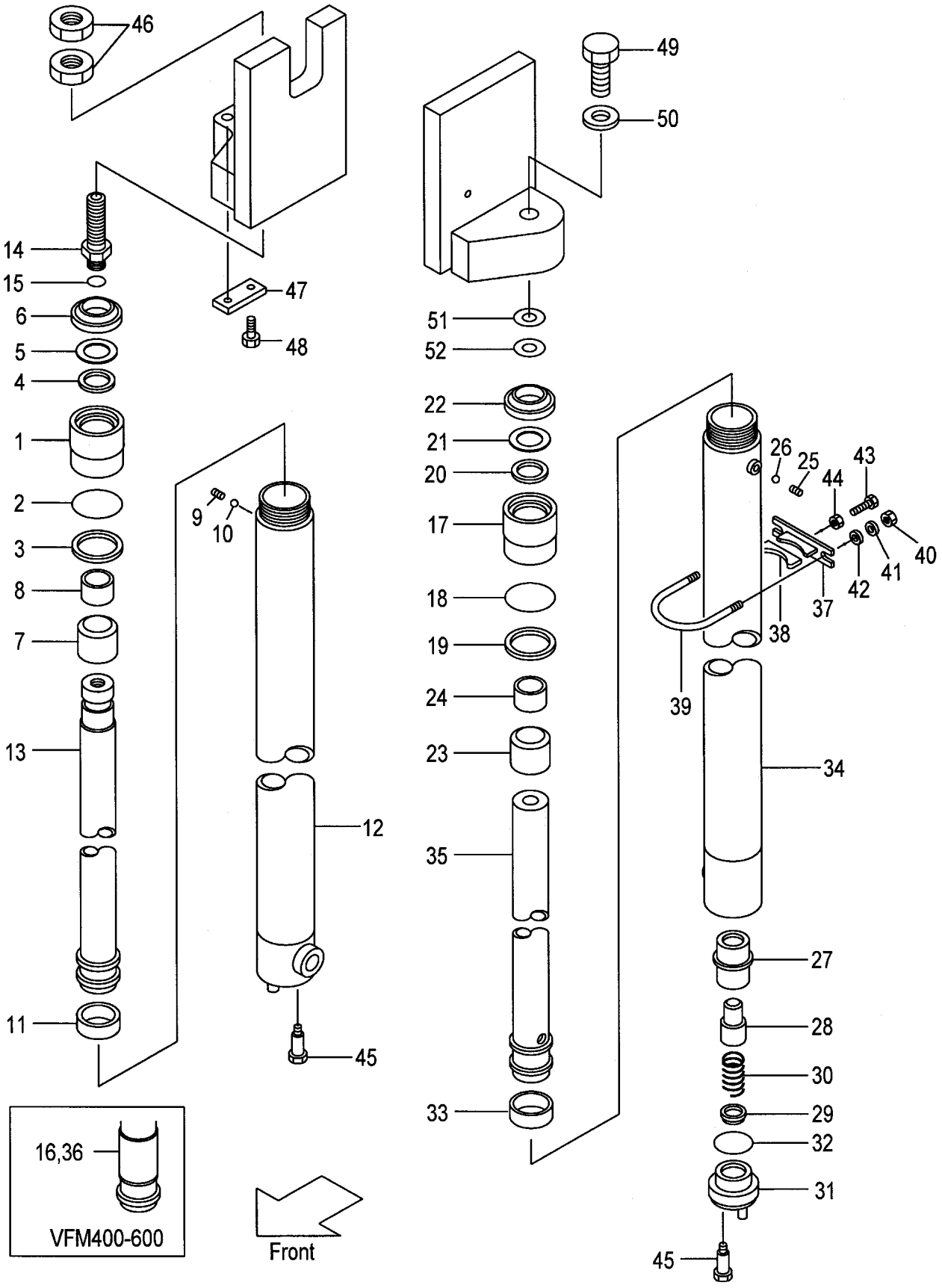

A:VFM39A(2T)
B:VFM39A(2.5T)

Item No	Part No.	Mark	Description		Req'd	Remarks : Serial No.
49	01103-14040		BOLT,LH	ﾎﾞﾙﾄ	1	
50	02011-00014		WASHER,LH	ﾜｯｼｬ	1	
51	23917-42191		SHIM,T-1.0,LH	ｼﾑ	5	
52	22679-43831		SHIM,T-0.2,LH	ｼﾑ	5	
K1	214A0-59821		KIT,OVERHAUL	ｵｰﾊﾞｰﾎｰﾙｷｯﾄ	1	INC.2-6,11,15,18-22,32,33

FIG.252 MAST PIPING [VFM39A]

(M5020530) マストパイピング

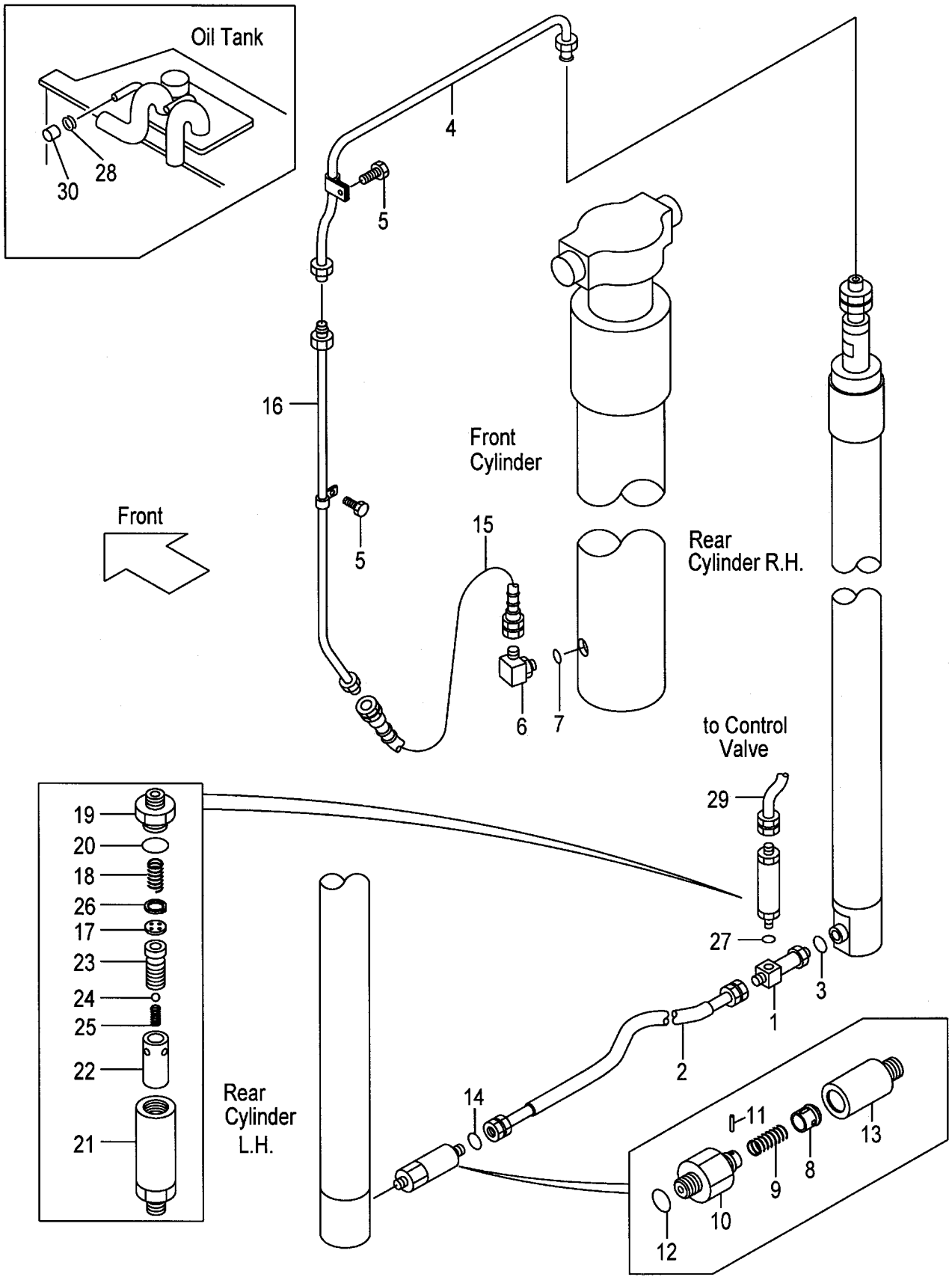

A:VFM39A(2T)
B:VFM39A(2.5T)

Item No	Part No.	Mark	Description		Req'd	Remarks : Serial No.
A1	234A8-41101		THREE-WAY-ASSY	ｽﾘｰｳｪｲｱｯｾﾝ	1	INC.1,3
1	NO PART NO.	#	THREE-WAY	ｽﾘｰｳｪｲ	1	
2	277T0-62071		HOSE	ﾎｰｽ	1	
3	03320-00140		O-RING	Oﾘﾝｸﾞ	1	
4	232A0-62001		PIPE	ﾊﾟｲﾌﾟ	1	
5	01183-06016		BOLT	ﾎﾞﾙﾄ	2	
A2	229F0-91001		ELBOW-ASSY	ｴﾙﾎﾞｱｯｾﾝ	1	INC.6,7
6	NO PART NO.	#	ELBOW	ｴﾙﾎﾞ	1	
7	03320-00240		O-RING	Oﾘﾝｸﾞ	1	
A3	234A0-62051		VALVE,CUT-ASSY	ﾊﾞﾙﾌﾞｱｯｾﾝ	1	INC.8-14
A4	234A8-40701		VALVE-SUB-ASSY,CUT	ﾊﾞﾙﾌﾞｻﾌﾞｱｯｾﾝ	1	INC.8-12
8	234A8-42602		PISTON	ﾋﾟｽﾄﾝ	1	
9	234A8-42611		SPRING	ｽﾌﾟﾘﾝｸﾞ	1	
10	234A8-42622		NIPPLE	ﾆｯﾌﾟﾙ	1	
11	02270-01014		PIN	ﾋﾟﾝ	1	
12	03320-00140		O-RING	Oﾘﾝｸﾞ	1	
13	234A0-62111		ADAPTER	ｱﾀﾞﾌﾟﾀ	1	
14	03320-00140		O-RING	Oﾘﾝｸﾞ	1	
15	214A0-62151		HOSE	ﾎｰｽ	1	
16	277P0-60301		PIPE VFM200	ﾊﾟｲﾌﾟ	1	
-	277P0-60311		PIPE VFM225	ﾊﾟｲﾌﾟ	1	
-	277P0-60321		PIPE VFM250	ﾊﾟｲﾌﾟ	1	
-	277P0-60331		PIPE VFM270	ﾊﾟｲﾌﾟ	1	
-	277P0-60341		PIPE VFM275	ﾊﾟｲﾌﾟ	1	
-	277P0-60351		PIPE VFM300	ﾊﾟｲﾌﾟ	1	
-	277P0-60361		PIPE VFM325	ﾊﾟｲﾌﾟ	1	
-	277P0-60371		PIPE VFM330	ﾊﾟｲﾌﾟ	1	
-	277P0-60381		PIPE VFM350	ﾊﾟｲﾌﾟ	1	
-	277P0-60391		PIPE VFM366	ﾊﾟｲﾌﾟ	1	
-	277P0-60401		PIPE VFM370	ﾊﾟｲﾌﾟ	1	
-	277P0-60411		PIPE VFM375	ﾊﾟｲﾌﾟ	1	
-	277P0-60421		PIPE VFM400	ﾊﾟｲﾌﾟ	1	
-	277P0-60431		PIPE VFM425	ﾊﾟｲﾌﾟ	1	
-	277P0-60441		PIPE VFM450	ﾊﾟｲﾌﾟ	1	
-	277P0-60451		PIPE VFM475	ﾊﾟｲﾌﾟ	1	
-	277P0-60461		PIPE VFM500	ﾊﾟｲﾌﾟ	1	
-	277P0-60471		PIPE VFM550	ﾊﾟｲﾌﾟ	1	
-	277P0-60481		PIPE VFM600	ﾊﾟｲﾌﾟ	1	
A5	234A8-41001		REGULATOR-ASSY	ﾚｷﾞｭﾚｰﾀｱｯｾﾝ	1	INC.17-26
17	NO PART NO.	#	PLATE	ﾌﾟﾚｰﾄ	1	
18	27979-43101		SPRING	ｽﾌﾟﾘﾝｸﾞ	1	
19	NO PART NO.	#	NIPPLE	ﾆｯﾌﾟﾙ	1	
20	03320-00280		O-RING	Oﾘﾝｸﾞ	1	
21	NO PART NO.	#	CASE	ｹｰｽ	1	
22	NO PART NO.	#	SLEEVE	ｽﾘｰﾌﾞ	1	
23	NO PART NO.	#	PISTON	ﾋﾟｽﾄﾝ	1	
24	24459-42951		BALL	ﾎﾞｰﾙ	1	
25	214A8-44151		SPRING	ｽﾌﾟﾘﾝｸﾞ	1	
26	02110-00018		RING,SNAP	ｽﾅｯﾌﾟﾘﾝｸﾞ	1	
27	03320-00180		O-RING	Oﾘﾝｸﾞ	1	

FIG.252 MAST PIPING [VFM39A]

(M5020530) マストパイピング

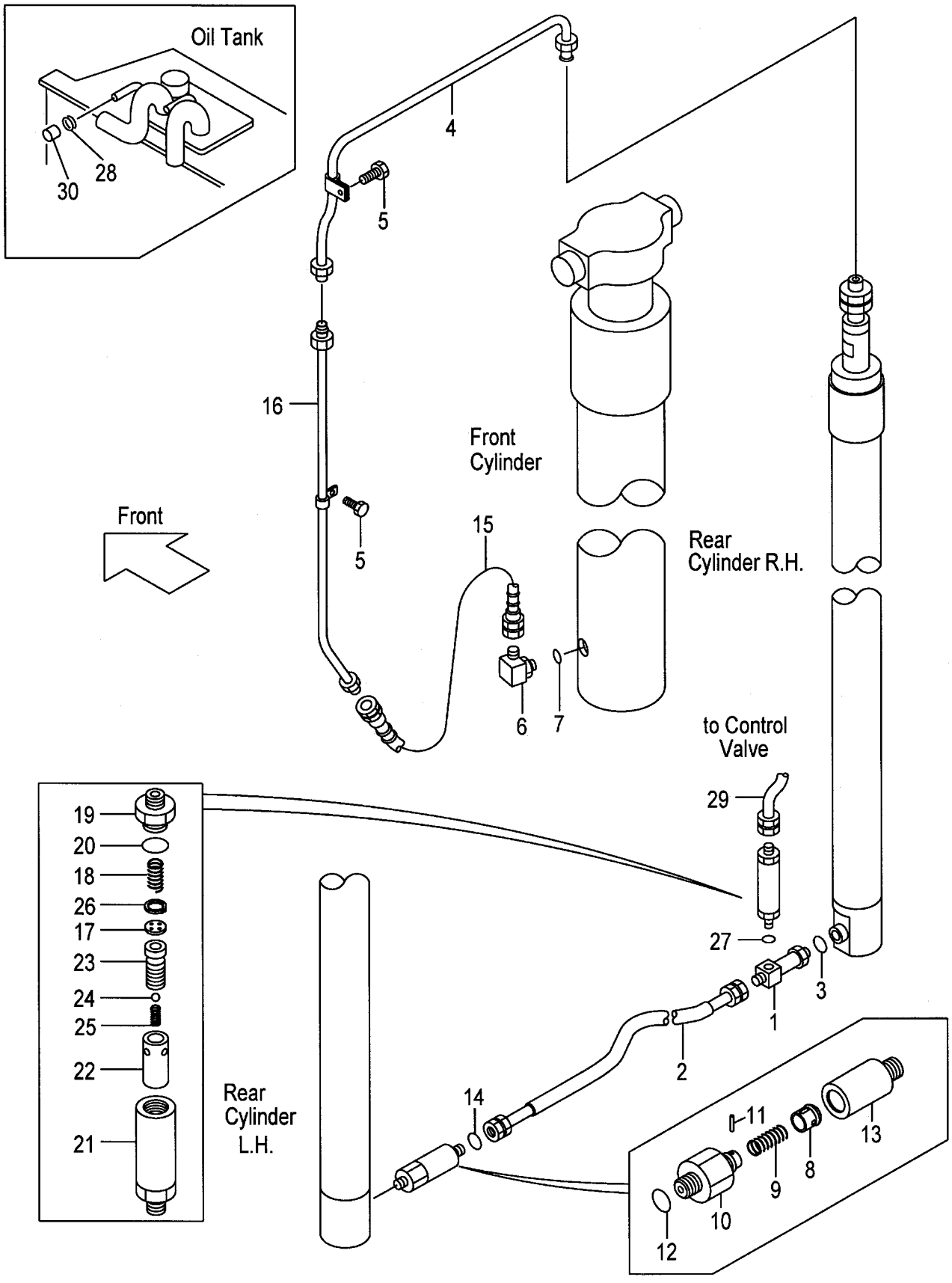

A:VFM39A(2T)
B:VFM39A(2.5T)

Item No	Part No.	Mark	Description	Req'd	Remarks : Serial No.
28	04914-00019		CLIP クリップ	1	
29	239A8-42001		HOSE ホース	1	
30	55593-62551		CAP キャップ	1	

FIG.253 FORK [VFHM39A]

(M5028150) フォーク

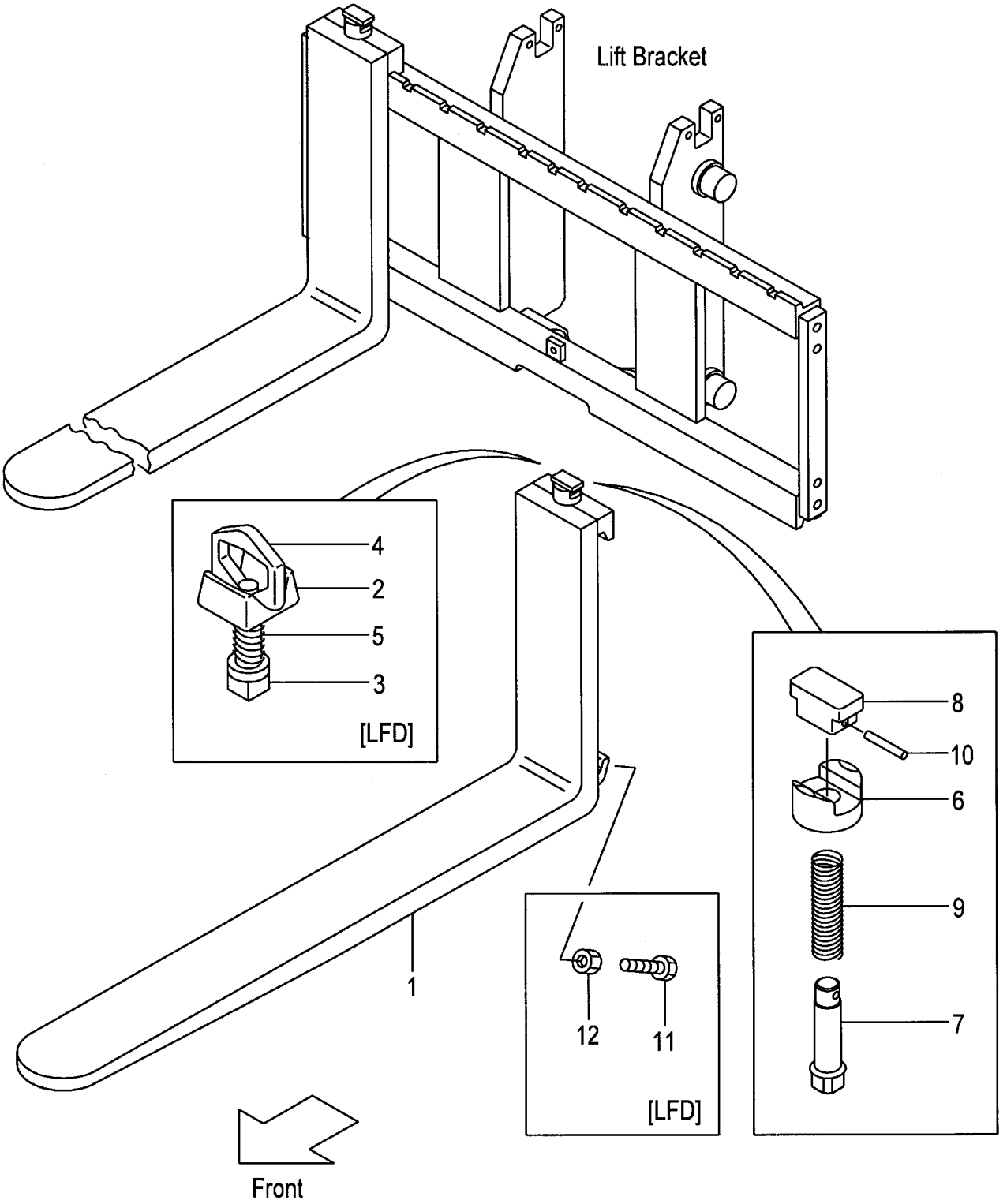

A:VFHM39A(2T)
B:VFHM39A(2.5T)

Item No	Part No.	Mark	Description		Req'd	Remarks : Serial No.
1	231A8-10101		FORK	ﾌｫｰｸ	2	A (L=920) INC.6-10
-	214A8-10512		FORK	ﾌｫｰｸ	2	B (L=1070) INC.6-10
-	214A8-10512		FORK	ﾌｫｰｸ	2	[EX] INC.6-10
-	231A8-10171		FORK	ﾌｫｰｸ	2	A [LF090] INC.6-10
-	231F8-10571		FORK	ﾌｫｰｸ	2	B [LF090] INC.6-10
-	231A8-10101		FORK	ﾌｫｰｸ	2	A [LF092] INC.6-10
-	231F8-10501		FORK	ﾌｫｰｸ	2	B [LF092] INC.6-10
-	214A8-10582		FORK	ﾌｫｰｸ	2	[LF100] INC.6-10
-	214A8-10512		FORK	ﾌｫｰｸ	2	[LF107] INC.6-10
-	214A8-10592		FORK	ﾌｫｰｸ	2	[LF110] INC.6-10
-	214A8-10602		FORK	ﾌｫｰｸ	2	[LF120] INC.6-10
-	214A8-10522		FORK	ﾌｫｰｸ	2	[LF122] INC.6-10
-	214A8-10612		FORK	ﾌｫｰｸ	2	[LF130] INC.6-10
-	214A8-10532		FORK	ﾌｫｰｸ	2	[LF137] INC.6-10
-	214A8-10622		FORK	ﾌｫｰｸ	2	[LF140] INC.6-10
-	214A8-10632		FORK	ﾌｫｰｸ	2	[LF150] INC.6-10
-	214A8-10542		FORK	ﾌｫｰｸ	2	[LF152] INC.6-10
-	214A8-10642		FORK	ﾌｫｰｸ	2	[LF160] INC.6-10
-	214A8-10552		FORK	ﾌｫｰｸ	2	[LF167] INC.6-10
-	214A8-10653		FORK	ﾌｫｰｸ	2	[LF170] INC.6-10
-	214A8-10663		FORK	ﾌｫｰｸ	2	[LF180] INC.6-10
-	214A8-10563		FORK	ﾌｫｰｸ	2	[LF182] INC.6-10
-	214A8-10673		FORK	ﾌｫｰｸ	2	[LF190] INC.6-10
-	214A8-10683		FORK	ﾌｫｰｸ	2	[LF200] INC.6-10
-	234A8-10571		FORK	ﾌｫｰｸ	2	[LFD090] INC.2-5
-	234A8-10501		FORK	ﾌｫｰｸ	2	[LFD092] INC.2-5
-	234A8-10581		FORK	ﾌｫｰｸ	2	[LFD100] INC.2-5
-	234A8-10511		FORK	ﾌｫｰｸ	2	[LFD107] INC.2-5
-	234A8-10591		FORK	ﾌｫｰｸ	2	[LFD110] INC.2-5
-	234A8-10601		FORK	ﾌｫｰｸ	2	[LFD120] INC.2-5
-	234A8-10521		FORK	ﾌｫｰｸ	2	[LFD122] INC.2-5
-	234A8-10611		FORK	ﾌｫｰｸ	2	[LFD130] INC.2-5
-	234A8-10531		FORK	ﾌｫｰｸ	2	[LFD137] INC.2-5
-	234A8-10621		FORK	ﾌｫｰｸ	2	[LFD140] INC.2-5
-	234A8-10631		FORK	ﾌｫｰｸ	2	[LFD150] INC.2-5
-	234A8-10541		FORK	ﾌｫｰｸ	2	[LFD152] INC.2-5
-	234A8-10641		FORK	ﾌｫｰｸ	2	[LFD160] INC.2-5
-	234A8-10551		FORK	ﾌｫｰｸ	2	[LFD167] INC.2-5
-	234A8-10652		FORK	ﾌｫｰｸ	2	[LFD170] INC.2-5
-	234A8-10662		FORK	ﾌｫｰｸ	2	[LFD180] INC.2-5
-	234A8-10562		FORK	ﾌｫｰｸ	2	[LFD182] INC.2-5
-	234A8-10672		FORK	ﾌｫｰｸ	2	[LFD190] INC.2-5
-	234A8-10682		FORK	ﾌｫｰｸ	2	[LFD200] INC.2-5
A1	214A8-11001		STOPPER-ASSY,FORK	ｽﾄｯﾊﾟｱｯｾﾝ	2	[LFD] INC.2-5

FIG.253 FORK [VFHM39A]

(M5028150) フォーク

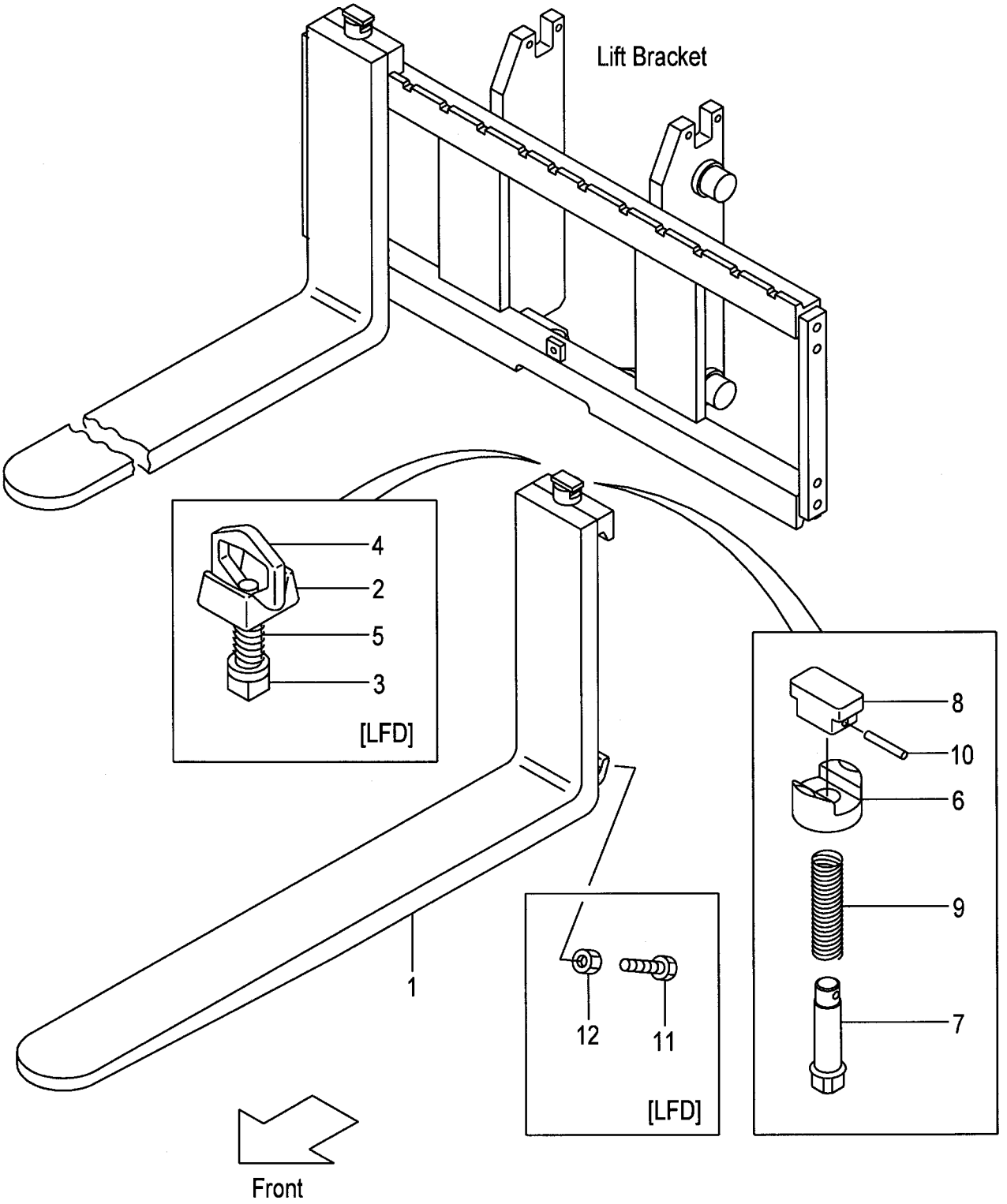

A:VFHM39A(2T)
B:VFHM39A(2.5T)

Item No	Part No.	Mark	Description		Req'd	Remarks : Serial No.
2	214A8-12001		HEAD	ﾍｯﾄﾞ	2	[LFD]
3	214A8-12011		STOPPER	ｽﾄｯﾊﾟ	2	[LFD]
4	214A8-12021		HANDLE	ﾊﾝﾄﾞﾙ	2	[LFD]
5	214A8-12031		SPRING	ｽﾌﾟﾘﾝｸﾞ	2	[LFD]
6	216G8-12921		HOLDER	ﾎﾙﾀﾞ	2	[LF]
7	231A8-12001		PIN	ﾋﾟﾝ	2	[LF]
8	231A8-12011		KNOB	ﾉﾌﾞ	2	[LF]
9	231A8-12021		SPRING	ｽﾌﾟﾘﾝｸﾞ	2	[LF]
10	231A8-12031		PIN,SPRING	ﾋﾟﾝ	2	[LF]
11	216G8-12101		BOLT	ﾎﾞﾙﾄ	4	[LFD]
12	01402-00010		NUT	ﾅｯﾄ	4	[LFD]

FIG.254 LIFT BRACKET [VFHM39A]

(M5020910) リフトブラケット

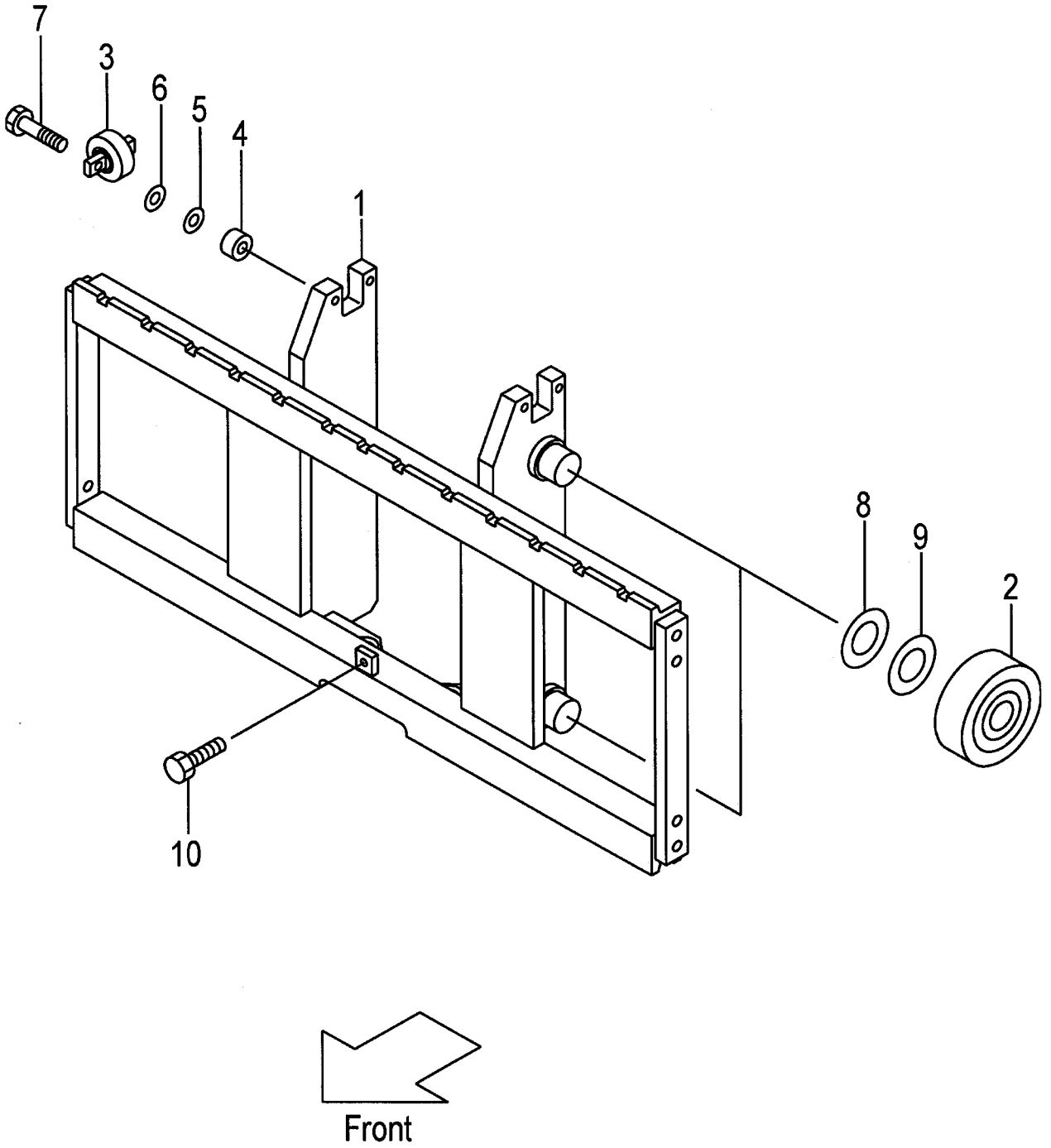

A:VFHM39A(2T)
B:VFHM39A(2.5T)

Item No	Part No.	Mark	Description		Req'd	Remarks : Serial No.
1	239A0-90101		BRACKET,LIFT	ﾌﾞﾗｹｯﾄ	1	
-	539A1-64201		BRACKET,LIFT	ﾌﾞﾗｹｯﾄ	1	[WFY110][WFY114][WFY127] [WFY135][WFY138]
-	539A1-64211		BRACKET,LIFT(L)	ﾌﾞﾗｹｯﾄ	1	[WFY135][WFY138][WFY145] [WFY146][WFY154][WFY180]
2	277P8-22051		ROLLER,END	ﾛｰﾗ	4	
-	277P8-22061		ROLLER,END	ﾛｰﾗ	(4)	
-	577P3-74001		ROLLER,END	ﾛｰﾗ	4	[FC][CS35][FCS35][FCS45] [FCS55]
-	577P3-74011		ROLLER,END	ﾛｰﾗ	(4)	[FC][CS35][FCS35][FCS45] [FCS55]
3	23458-32052		ROLLER,SIDE	ﾛｰﾗ	2	
-	514A3-71702		ROLLER,SIDE	ﾛｰﾗ	2	[FC][CS35][FCS35][FCS45] [FCS55]
4	22548-34031		SPACER	ｽﾍﾟｰｻ	4	
5	22548-34051		SHIM,T-0.5	ｼﾑ	5	
6	22548-34061		SHIM,T-1.0	ｼﾑ	5	
7	01184-12040		BOLT & WASHER	ﾎﾞﾙﾄ & ﾜｯｼｬ	4	
8	277P8-22071		SHIM,T-0.5	ｼﾑ	10	
9	277P8-22081		SHIM,T-1.0	ｼﾑ	10	
10	01184-12025		BOLT & WASHER	ﾎﾞﾙﾄ & ﾜｯｼｬ	1	
11	214A0-93001	+	CHART,CAPACITY	ﾁｬｰﾄ	1	A (VFHM360-500)
-	214A0-93011	+	CHART,CAPACITY	ﾁｬｰﾄ	1	A (VFHM540-750)
-	214A0-93101	+	CHART,CAPACITY	ﾁｬｰﾄ	1	B (VFHM360-500)
-	214A0-93111	+	CHART,CAPACITY	ﾁｬｰﾄ	1	B (VFHM540-750)
-	214A0-93031	+	CHART,CAPACITY	ﾁｬｰﾄ	1	A [VFHM360-500/EXA]
-	214A0-93041	+	CHART,CAPACITY	ﾁｬｰﾄ	1	A [VFHM540-750/EXA]
-	214A0-93131	+	CHART,CAPACITY	ﾁｬｰﾄ	1	B [VFHM360-500/EXA]
-	214A0-93141	+	CHART,CAPACITY	ﾁｬｰﾄ	1	B [VFHM540-750/EXA]
-	514A3-82301	+	CHART,CAPACITY	ﾁｬｰﾄ	1	[EXB][EXC][EXE][EXN]
-	514A3-82321	+	CHART,CAPACITY	ﾁｬｰﾄ	1	[EXD]
-	524T3-84031	+	CHART,CAPACITY	ﾁｬｰﾄ	1	[EXR]
-	63110-18921	+	CHART,CAPACITY	ﾁｬｰﾄ	1	[EXB/CHINESE]
-	514A3-82341	+	CHART,CAPACITY	ﾁｬｰﾄ	1	[EXB/FRENCH][EXE/FRENCH]
-	514A3-82331	+	CHART,CAPACITY	ﾁｬｰﾄ	1	[EXB/SPANISH][EXE/SPANISH]
-	514A3-82361	+	CHART,CAPACITY	ﾁｬｰﾄ	1	[EXEEC/DANISH][EXNEC/DANISH]
-	514A3-82381	+	CHART,CAPACITY	ﾁｬｰﾄ	1	[EXEEC/GREEK]
-	514A3-82371	+	CHART,CAPACITY	ﾁｬｰﾄ	1	[EXEEC/ITALIAN]
-	514A3-82351	+	CHART,CAPACITY	ﾁｬｰﾄ	1	[EXEEC/DUTCH]
-	514A3-82391	+	CHART,CAPACITY	ﾁｬｰﾄ	1	[EXEEC/PORTUGUESE]
-	529F3-82101	+	CHART,CAPACITY	ﾁｬｰﾄ	1	[EXNEC/FINNISH]
-	529F3-82111	+	CHART,CAPACITY	ﾁｬｰﾄ	1	[EXNEC/SWEDISH]

FIG.254 LIFT BRACKET [VFHM39A]

(M5020910) リフトブラケット

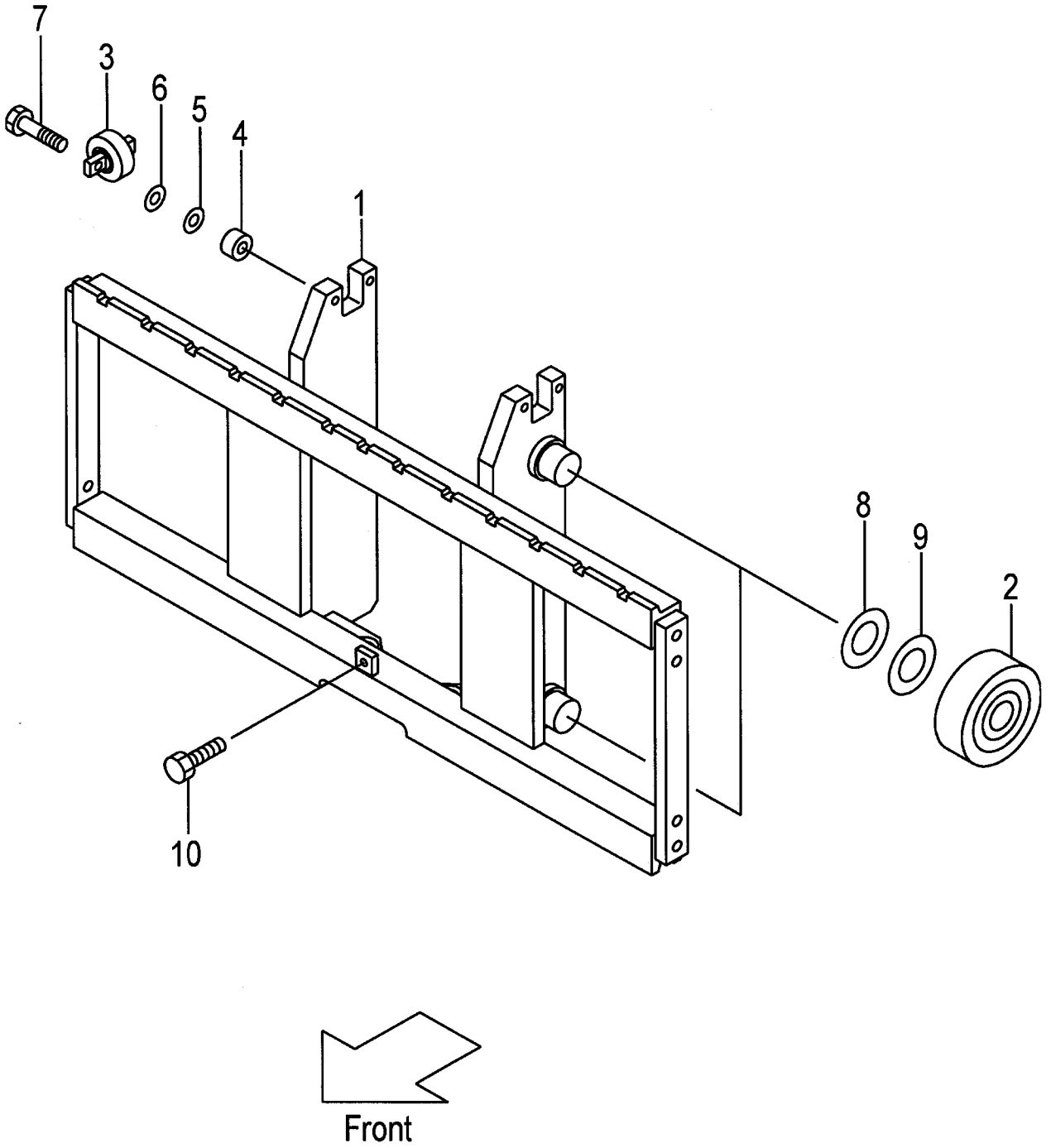

A:VFHM39A(2T)
B:VFHM39A(2.5T)

Item No	Part No.	Mark	Description	Req'd	Remarks : Serial No.
12	02432-01008	+	RIVET リベット	4	

FIG.255 BACKREST [VFHM39A]

(M5028270) ﾊﾞｯｸﾚｽﾄ

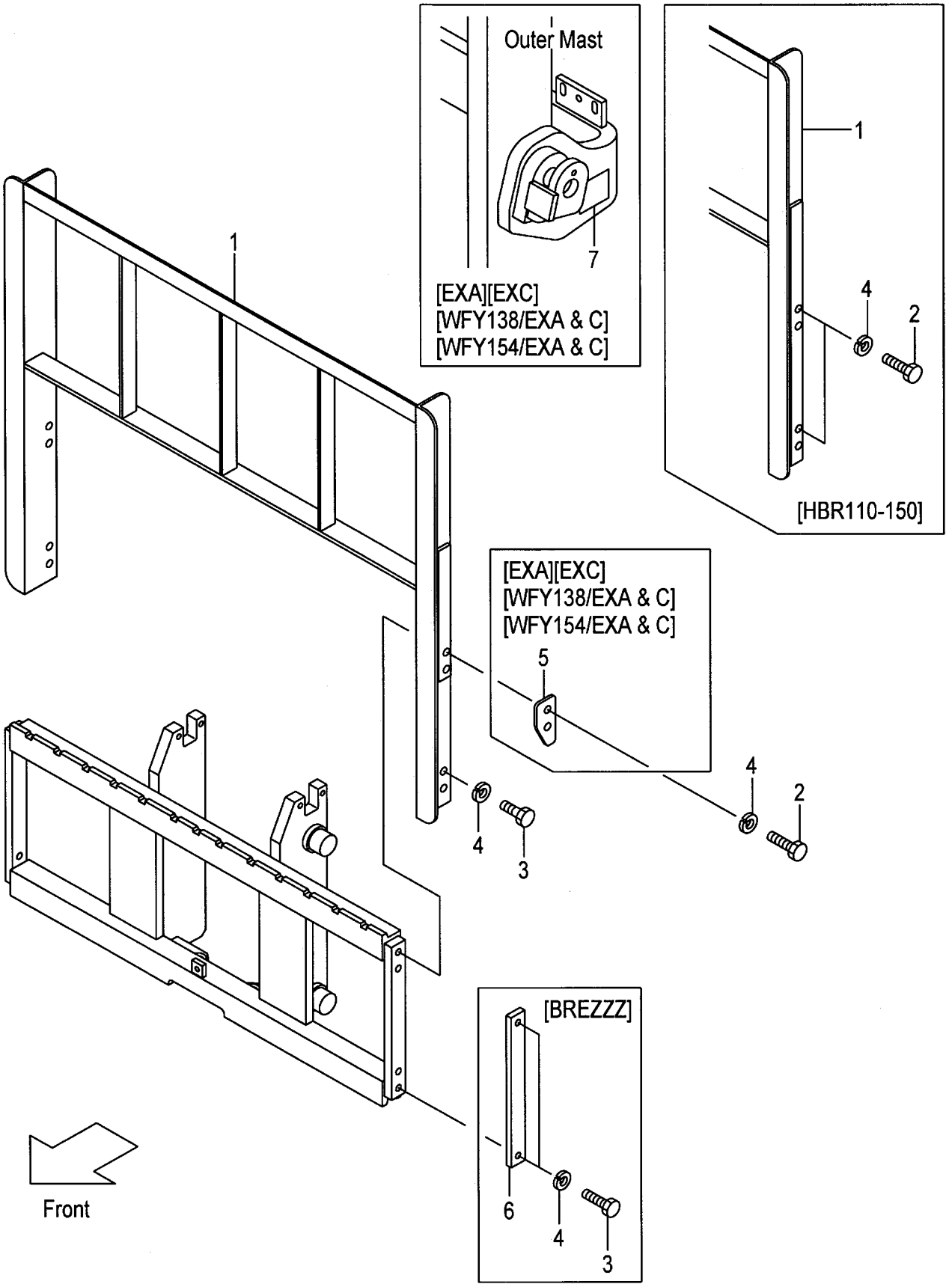

A:VFHM39A(2T)
B:VFHM39A(2.5T)

Item No	Part No.	Mark	Description		Req'd	Remarks : Serial No.
1	234A8-22202		BACKREST	ﾊﾞｯｸﾚｽﾄ	1	(WITHOUT BREZZZ)
-	534A2-74001		BACKREST	ﾊﾞｯｸﾚｽﾄ	1	[EXA][EXC]
-	239A8-20101		BACKREST	ﾊﾞｯｸﾚｽﾄ	1	[HBR110]
-	239A8-22111		BACKREST	ﾊﾞｯｸﾚｽﾄ	1	[HBR120]
-	239A8-20121		BACKREST	ﾊﾞｯｸﾚｽﾄ	1	[HBR130]
-	239A8-20131		BACKREST	ﾊﾞｯｸﾚｽﾄ	1	[HBR140]
-	239A8-20141		BACKREST	ﾊﾞｯｸﾚｽﾄ	1	[HBR150]
-	534A1-64402		BACKREST	ﾊﾞｯｸﾚｽﾄ	1	[WFY135]
-	534A1-64412		BACKREST	ﾊﾞｯｸﾚｽﾄ	1	[WFY146]
-	534A2-74101		BACKREST	ﾊﾞｯｸﾚｽﾄ	1	[WFY135/EXA][WFY135/EXC]
-	534A2-74201		BACKREST	ﾊﾞｯｸﾚｽﾄ	1	[WFY146/EXA][WFY146/EXC]
2	01100-14030		BOLT	ﾎﾞﾙﾄ	4	(WITHOUT BREZZZ)
-	01100-14035		BOLT	ﾎﾞﾙﾄ	4	[EXA][EXC][WFY135/EXA&C] [WFY146/EXA&C]
-	01100-14030		BOLT	ﾎﾞﾙﾄ	8	[HBR110-150]
3	01100-14025		BOLT	ﾎﾞﾙﾄ	4	(WITHOUT HBR110-150)
4	02010-00014		WASHER	ﾜｯｼｬ	8	
-	02010-00014		WASHER	ﾜｯｼｬ	4	[BREZZZ]
5	534A2-74051		PLATE,STOPPER	ﾌﾟﾚｰﾄ	2	[EXA][EXC][WFY135/EXA&C] [WFY146/EXA&C]
6	23659-42161		PLATE,SIDE	ﾌﾟﾚｰﾄ	2	[BREZZZ]
7	534A2-74301		DECAL,CAUTION	ﾃﾞｶﾙ	1	[EXA][EXC][WFY135/EXA&C] [WFY146/EXA&C]

FIG.256 MAST [VFHM39A]

(M5020710) マスト

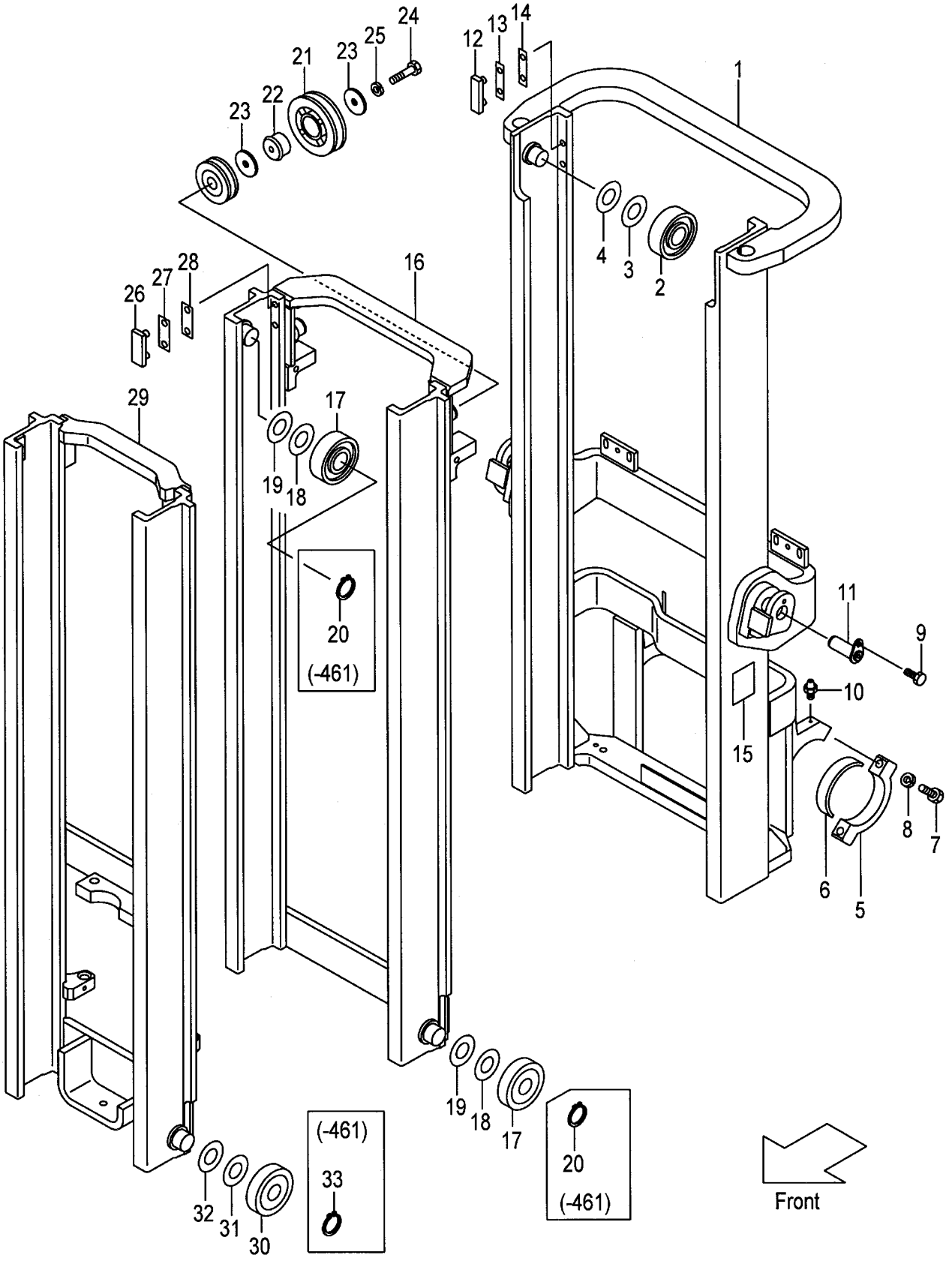

A:VFHM39A(2T)
B:VFHM39A(2.5T)

Item No	Part No.	Mark	Description		Req'd	Remarks : Serial No.
1	239A0-70211		MAST,OUTER VFHM360	アウタマスト	1	
-	239A0-70221		MAST,OUTER VFHM400	アウタマスト	1	
-	239A0-70201		MAST,OUTER VFHM435	アウタマスト	1	
-	239A0-70231		MAST,OUTER VFHM480	アウタマスト	1	
-	239A0-70241		MAST,OUTER VFHM500	アウタマスト	1	
-	239A0-70251		MAST,OUTER VFHM540	アウタマスト	1	
-	239A0-70261		MAST,OUTER VFHM550	アウタマスト	1	
-	239A0-70271		MAST,OUTER VFHM600	アウタマスト	1	
-	239A0-70281		MAST,OUTER VFHM650	アウタマスト	1	
-	239A0-70291		MAST,OUTER VFHM700	アウタマスト	1	
-	239A0-70301		MAST,OUTER VFHM750	アウタマスト	1	
-	539A3-91411		MAST,OUTER VFHM360	アウタマスト	1	[EXR][RW][HC]
-	539A3-91421		MAST,OUTER VFHM400	アウタマスト	1	[EXR][RW][HC]
-	539A3-91401		MAST,OUTER VFHM435	アウタマスト	1	[EXR][RW][HC]
-	539A3-91431		MAST,OUTER VFHM480	アウタマスト	1	[EXR][RW][HC]
-	539A3-91441		MAST,OUTER VFHM500	アウタマスト	1	[EXR][RW][HC]
-	539A3-91451		MAST,OUTER VFHM540	アウタマスト	1	[EXR][RW][HC]
-	539A3-91461		MAST,OUTER VFHM550	アウタマスト	1	[EXR][RW][HC]
-	539A3-91471		MAST,OUTER VFHM600	アウタマスト	1	[EXR][RW][HC]
-	539A3-91481		MAST,OUTER VFHM650	アウタマスト	1	[EXR][RW][HC]
-	539A3-91491		MAST,OUTER VFHM700	アウタマスト	1	[EXR][RW][HC]
-	539A3-91501		MAST,OUTER VFHM750	アウタマスト	1	[EXR][RW][HC]
2	277P8-22051		ROLLER,END	ローラ	2	
-	577P3-74001		ROLLER,END	ローラ	2	[FC][CS35][FCS35][FCS45] [FCS55]
3	277P8-22071		SHIM,T-0.5	シム	12	
4	277P8-22081		SHIM,T-1.0	シム	12	
5	22018-30065		CAP,MAST-SUPPORT	キャップ	2	MAST NO.1-354
-	277P8-32701		CAP	キャップ	2	MAST NO.355-
6	214A8-02201		BUSHING	ブッシング	2	
7	01103-16065		BOLT	ボルト	4	
8	02011-00016		WASHER	ワッシャ	4	
9	216G8-52301		BOLT & WASHER	ボルト & ワッシャ	2	
10	04901-00100		FITTING	フィッティング	2	
11	272K8-52201		PIN	ピン	2	
12	216G8-33401		SLIPPER	スリッパ	2	
13	216G8-33361		SHIM,T-0.5	シム	8	
14	216G8-33371		SHIM,T-1.0	シム	4	
15	23678-06002		PLATE,NAME	プレート	1	
16	232A0-70411		MAST,MIDDLE VFHM360	ミドルマスト	1	
-	232A0-70421		MAST,MIDDLE VFHM400	ミドルマスト	1	
-	232A0-70401		MAST,MIDDLE VFHM435	ミドルマスト	1	
-	232A0-70431		MAST,MIDDLE VFHM480	ミドルマスト	1	
-	232A0-70441		MAST,MIDDLE VFHM500	ミドルマスト	1	
-	232A0-70451		MAST,MIDDLE VFHM540	ミドルマスト	1	
-	232A0-70461		MAST,MIDDLE VFHM550	ミドルマスト	1	
-	232A0-70471		MAST,MIDDLE VFHM600	ミドルマスト	1	
-	232A0-70481		MAST,MIDDLE VFHM650	ミドルマスト	1	
-	232A0-70491		MAST,MIDDLE VFHM700	ミドルマスト	1	
-	232A0-70501		MAST,MIDDLE VFHM750	ミドルマスト	1	

FIG.256 MAST [VFHM39A]

(M5020710) マスト

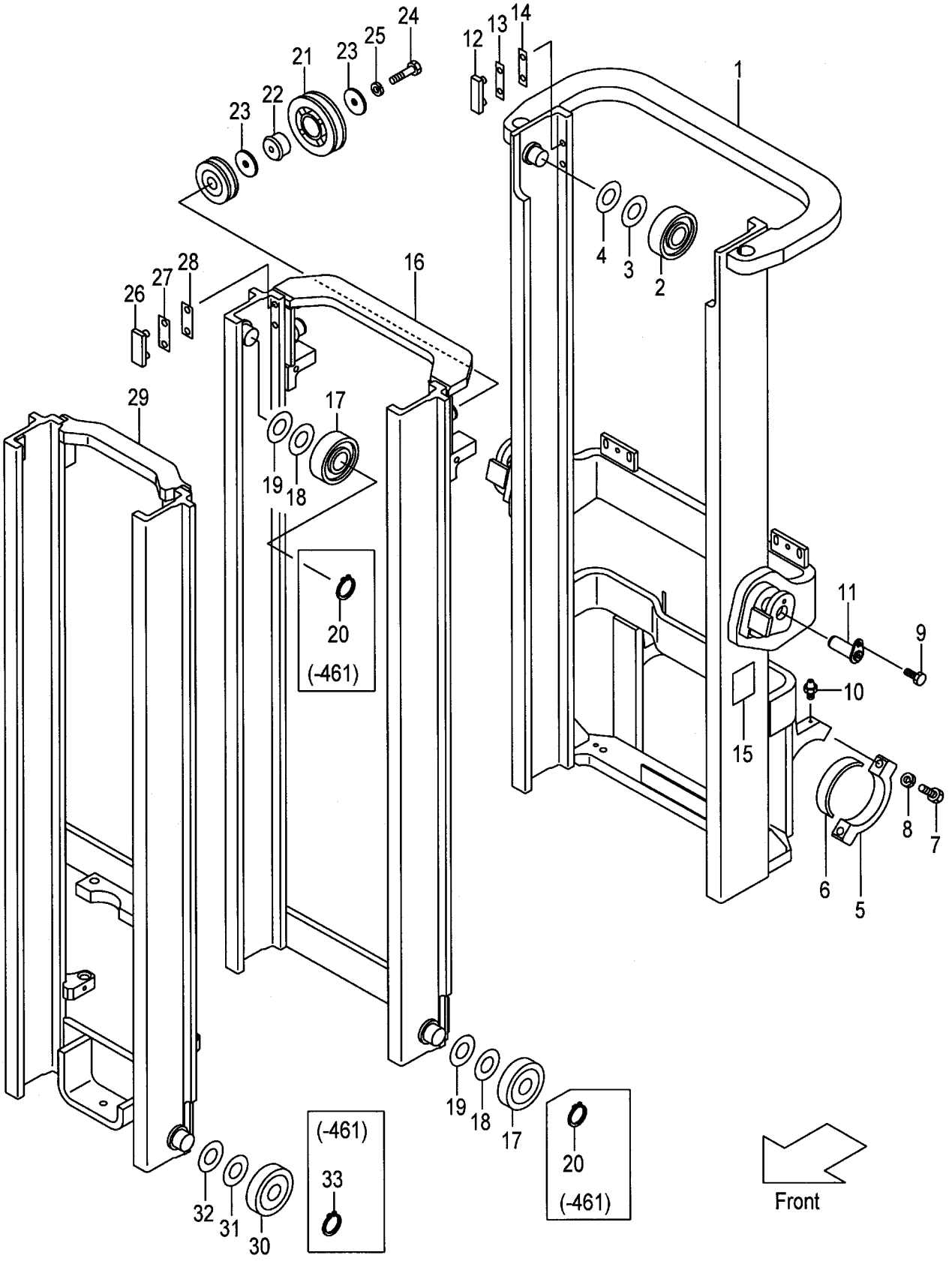

A:VFHM39A(2T)
B:VFHM39A(2.5T)

Item No	Part No.	Mark	Description		Req'd	Remarks : Serial No.
17	277P8-22051		ROLLER,END	ﾛｰﾗ	4	
-	277P8-22061		ROLLER,END	ﾛｰﾗ	(2)	
-	577P3-74001		ROLLER,END	ﾛｰﾗ	4	[FC][CS35][FCS35][FCS45] [FCS55]
-	577P3-74011		ROLLER,END	ﾛｰﾗ	(2)	[FC][CS35][FCS35][FCS45] [FCS55]
18	277P8-22071		SHIM,T-0.5	ｼﾑ	15	
19	277P8-22081		SHIM,T-1.0	ｼﾑ	15	
20	09192-30044		RING,SNAP	ｽﾅｯﾌﾟﾘﾝｸﾞ	4	MAST NO.1-461
21	23670-73581		PULLEY	ﾌﾟｰﾘ	1	
22	23200-72211		BRACKET	ﾌﾞﾗｹｯﾄ	1	
23	23200-72221		WASHER	ﾜｯｼｬ	2	
24	01100-16055		BOLT	ﾎﾞﾙﾄ	1	
25	02010-00016		WASHER	ﾜｯｼｬ	1	
26	216G8-33351		SLIPPER	ｽﾘｯﾊﾟ	2	
27	216G8-33361		SHIM,T-0.5	ｼﾑ	4	
28	216G8-33371		SHIM,T-1.0	ｼﾑ	8	
29	231A0-70612		MAST,INNER VFHM360	ｲﾝﾅﾏｽﾄ	1	
-	231A0-70622		MAST,INNER VFHM400	ｲﾝﾅﾏｽﾄ	1	
-	231A0-70602		MAST,INNER VFHM435	ｲﾝﾅﾏｽﾄ	1	
-	231A0-70632		MAST,INNER VFHM480	ｲﾝﾅﾏｽﾄ	1	
-	231A0-70642		MAST,INNER VFHM500	ｲﾝﾅﾏｽﾄ	1	
-	231A0-70652		MAST,INNER VFHM540	ｲﾝﾅﾏｽﾄ	1	
-	231A0-70662		MAST,INNER VFHM550	ｲﾝﾅﾏｽﾄ	1	
-	231A0-70672		MAST,INNER VFHM600	ｲﾝﾅﾏｽﾄ	1	
-	231A0-70682		MAST,INNER VFHM650	ｲﾝﾅﾏｽﾄ	1	
-	231A0-70692		MAST,INNER VFHM700	ｲﾝﾅﾏｽﾄ	1	
-	231A0-70702		MAST,INNER VFHM750	ｲﾝﾅﾏｽﾄ	1	
30	277P8-22051		ROLLER,END	ﾛｰﾗ	2	
-	277P8-22061		ROLLER,END	ﾛｰﾗ	(2)	
-	577P3-74001		ROLLER,END	ﾛｰﾗ	2	[FC][CS35][FCS35][FCS45] [FCS55]
-	577P3-74011		ROLLER,END	ﾛｰﾗ	(2)	[FC][CS35][FCS35][FCS45] [FCS55]
31	277P8-22071		SHIM,T-0.5	ｼﾑ	12	
32	277P8-22081		SHIM,T-1.0	ｼﾑ	12	
33	09192-30044		RING,SNAP	ｽﾅｯﾌﾟﾘﾝｸﾞ	2	MAST NO.1-461

FIG.257 TILT GAUGE [VFHM39A/(TG,PPC,PR,PRC,MPC)]

(M5020720) ﾃｨﾙﾄｹﾞｰｼﾞ

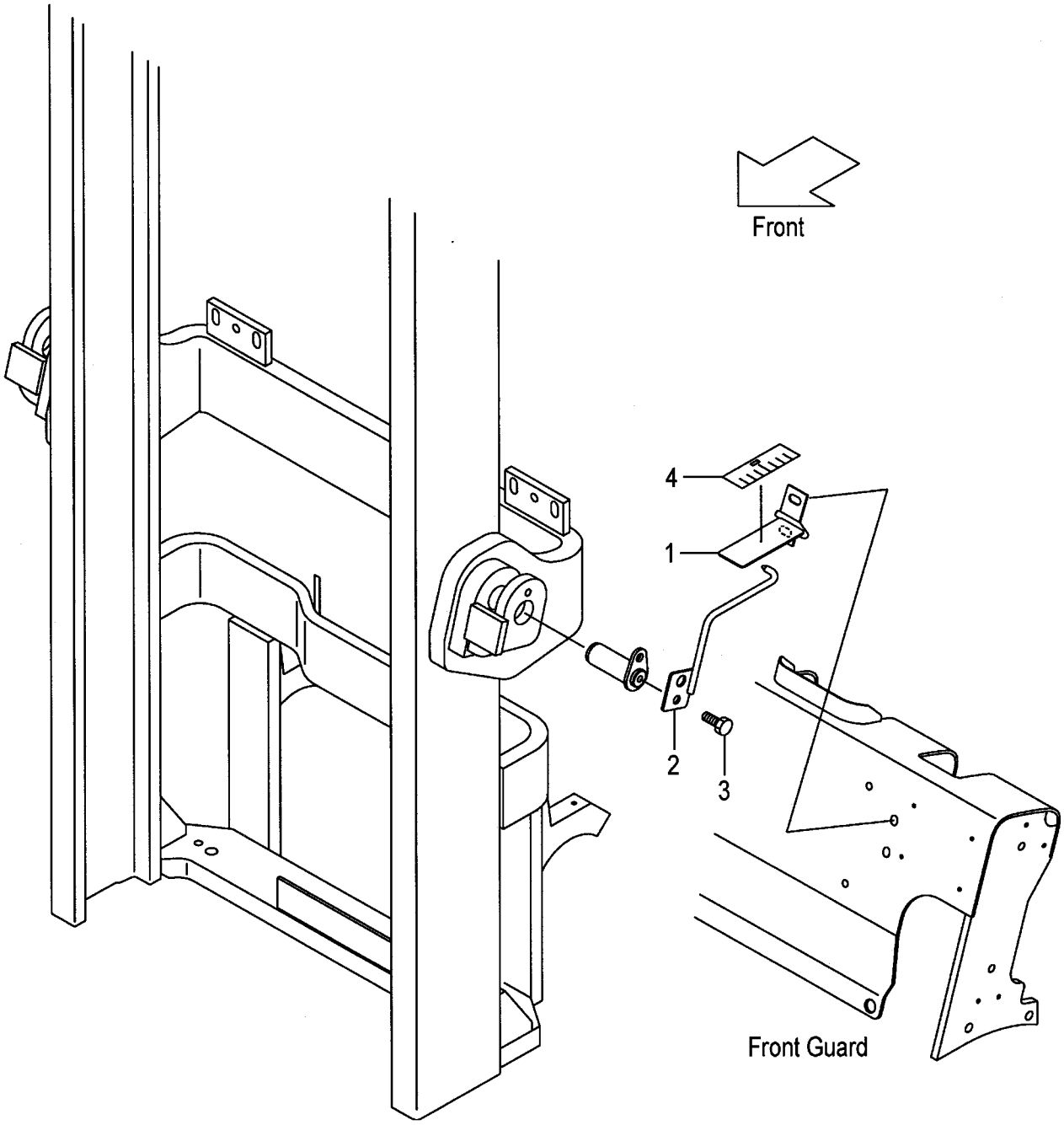

A:VFHM39A(2T)
B:VFHM39A(2.5T)

Item No	Part No.	Mark	Description		Req'd	Remarks : Serial No.
1	639A0-10011		GAUGE,TILT	ｹﾞｰｼﾞ	1	[TG][PPC][PR][PRC][MPC]
2	639A0-10051		INDICATOR	ｲﾝｼﾞｹｰﾀ	1	[TG][PPC][PR][PRC][MPC]
3	216G4-12251		BOLT	ﾎﾞﾙﾄ	1	[TG][PPC][PR][PRC][MPC]
4	62459-23371		SEAL,GAUGE	ｼｰﾙ	1	[TG][PPC][PR][PRC][MPC]

FIG.258 LIFT CYLINDER(FRONT) [VFHM39A]

(M5020810) リフトシリンダ(フロント)

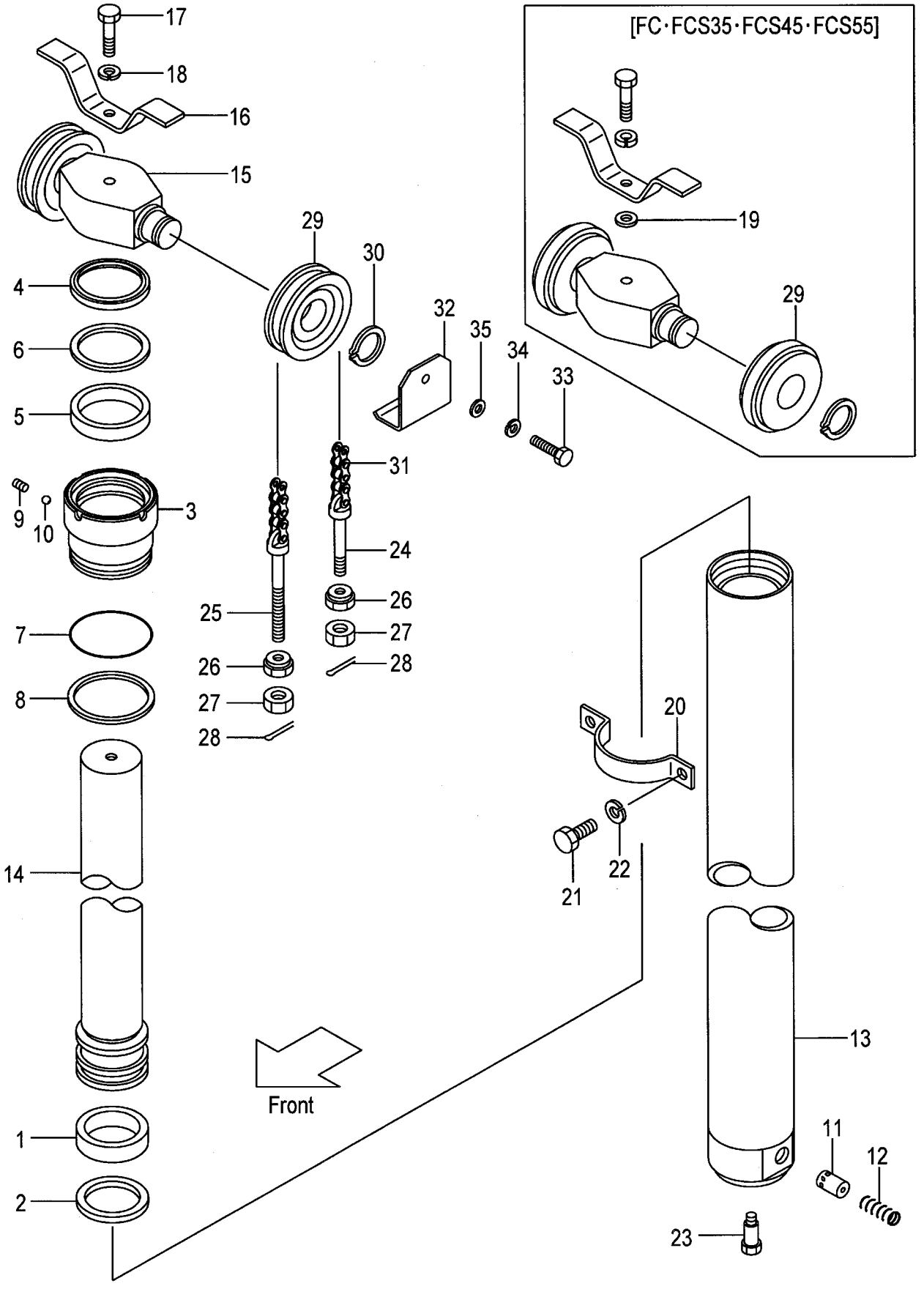

A:VFHM39A(2T)
B:VFHM39A(2.5T)

Item No	Part No.	Mark	Description		Req'd	Remarks : Serial No.
A1	277P0-80011		CYL-ASSY,LIFT VFHM360	ｼﾘﾝﾀﾞｱｯｾﾝ	1	INC.1-14
-	277P0-80021		CYL-ASSY,LIFT VFHM400	ｼﾘﾝﾀﾞｱｯｾﾝ	1	INC.1-14
-	277P0-80001		CYL-ASSY,LIFT VFHM435	ｼﾘﾝﾀﾞｱｯｾﾝ	1	INC.1-14
-	277P0-80031		CYL-ASSY,LIFT VFHM480	ｼﾘﾝﾀﾞｱｯｾﾝ	1	INC.1-14
-	277P0-80041		CYL-ASSY,LIFT VFHM500	ｼﾘﾝﾀﾞｱｯｾﾝ	1	INC.1-14
-	277P0-80051		CYL-ASSY,LIFT VFHM540	ｼﾘﾝﾀﾞｱｯｾﾝ	1	INC.1-14
-	277P0-80061		CYL-ASSY,LIFT VFHM550	ｼﾘﾝﾀﾞｱｯｾﾝ	1	INC.1-14
-	277P0-80071		CYL-ASSY,LIFT VFHM600	ｼﾘﾝﾀﾞｱｯｾﾝ	1	INC.1-14
-	277P0-80081		CYL-ASSY,LIFT VFHM650	ｼﾘﾝﾀﾞｱｯｾﾝ	1	INC.1-14
-	277P0-80091		CYL-ASSY,LIFT VFHM700	ｼﾘﾝﾀﾞｱｯｾﾝ	1	INC.1-14
-	277P0-80101		CYL-ASSY,LIFT VFHM750	ｼﾘﾝﾀﾞｱｯｾﾝ	1	INC.1-14
1	22438-42641	*	WEARING	ｳｴｱﾘﾝｸﾞ	1	
2	53658-42011	*	RING,PISTON	ﾘﾝｸﾞ	1	
3	277P0-82061		CAP,CYL	ｷｬｯﾌﾟ	1	
4	27410-53201	*	SEAL,DUST	ｼｰﾙ	1	
5	23670-82251	*	PACKING	ﾊﾟｯｷﾝｸﾞ	1	
6	23670-82261	*	RING,BACK-UP	ﾘﾝｸﾞ	1	
7	03350-00850	*	O-RING	Oﾘﾝｸﾞ	1	
8	277P0-82071	*	RING,BACK-UP	ﾘﾝｸﾞ	1	
9	234A0-52611		PLUG	ﾌﾟﾗｸﾞ	1	
10	03190-00006		BALL	ﾎﾞｰﾙ	1	
11	229F0-82101		PISTON	ﾋﾟｽﾄﾝ	1	
12	24389-46021		SPRING	ｽﾌﾟﾘﾝｸﾞ	1	
13	277P0-80511		TUBE,CYL VFHM360	ﾁｭｰﾌﾞ	1	
-	277P0-80521		TUBE,CYL VFHM400	ﾁｭｰﾌﾞ	1	
-	277P0-80501		TUBE,CYL VFHM435	ﾁｭｰﾌﾞ	1	
-	277P0-80531		TUBE,CYL VFHM480	ﾁｭｰﾌﾞ	1	
-	277P0-80541		TUBE,CYL VFHM500	ﾁｭｰﾌﾞ	1	
-	277P0-80551		TUBE,CYL VFHM540	ﾁｭｰﾌﾞ	1	
-	277P0-80561		TUBE,CYL VFHM550	ﾁｭｰﾌﾞ	1	
-	277P0-80571		TUBE,CYL VFHM600	ﾁｭｰﾌﾞ	1	
-	277P0-80581		TUBE,CYL VFHM650	ﾁｭｰﾌﾞ	1	
-	277P0-80591		TUBE,CYL VFHM700	ﾁｭｰﾌﾞ	1	
-	277P0-80601		TUBE,CYL VFHM750	ﾁｭｰﾌﾞ	1	
14	277P0-80311		ROD,PISTON VFHM360	ﾛｯﾄﾞ	1	
-	277P0-80321		ROD,PISTON VFHM400	ﾛｯﾄﾞ	1	
-	277P0-80301		ROD,PISTON VFHM435	ﾛｯﾄﾞ	1	
-	277P0-80331		ROD,PISTON VFHM480	ﾛｯﾄﾞ	1	
-	277P0-80341		ROD,PISTON VFHM500	ﾛｯﾄﾞ	1	
-	277P0-80351		ROD,PISTON VFHM540	ﾛｯﾄﾞ	1	
-	277P0-50601		ROD,PISTON VFHM550	ﾛｯﾄﾞ	1	
-	277P0-80371		ROD,PISTON VFHM600	ﾛｯﾄﾞ	1	
-	277P0-80381		ROD,PISTON VFHM650	ﾛｯﾄﾞ	1	
-	277P0-80391		ROD,PISTON VFHM700	ﾛｯﾄﾞ	1	
-	277P0-80401		ROD,PISTON VFHM750	ﾛｯﾄﾞ	1	
15	277P0-82501		HEAD,PISTON	ﾍｯﾄﾞ	1	
16	214A0-82681		STOPPER,CHAIN	ｽﾄｯﾊﾟ	1	
17	01100-16075		BOLT	ﾎﾞﾙﾄ	1	
18	02010-00016		WASHER	ﾜｯｼｬ	1	
19	02000-00016		WASHER	ﾜｯｼｬ	1	[FC][FCS35][FCS45][FCS55]

FIG.258 LIFT CYLINDER(FRONT) [VFHM39A]

(M5020810) リフトシリンダ(フロント)

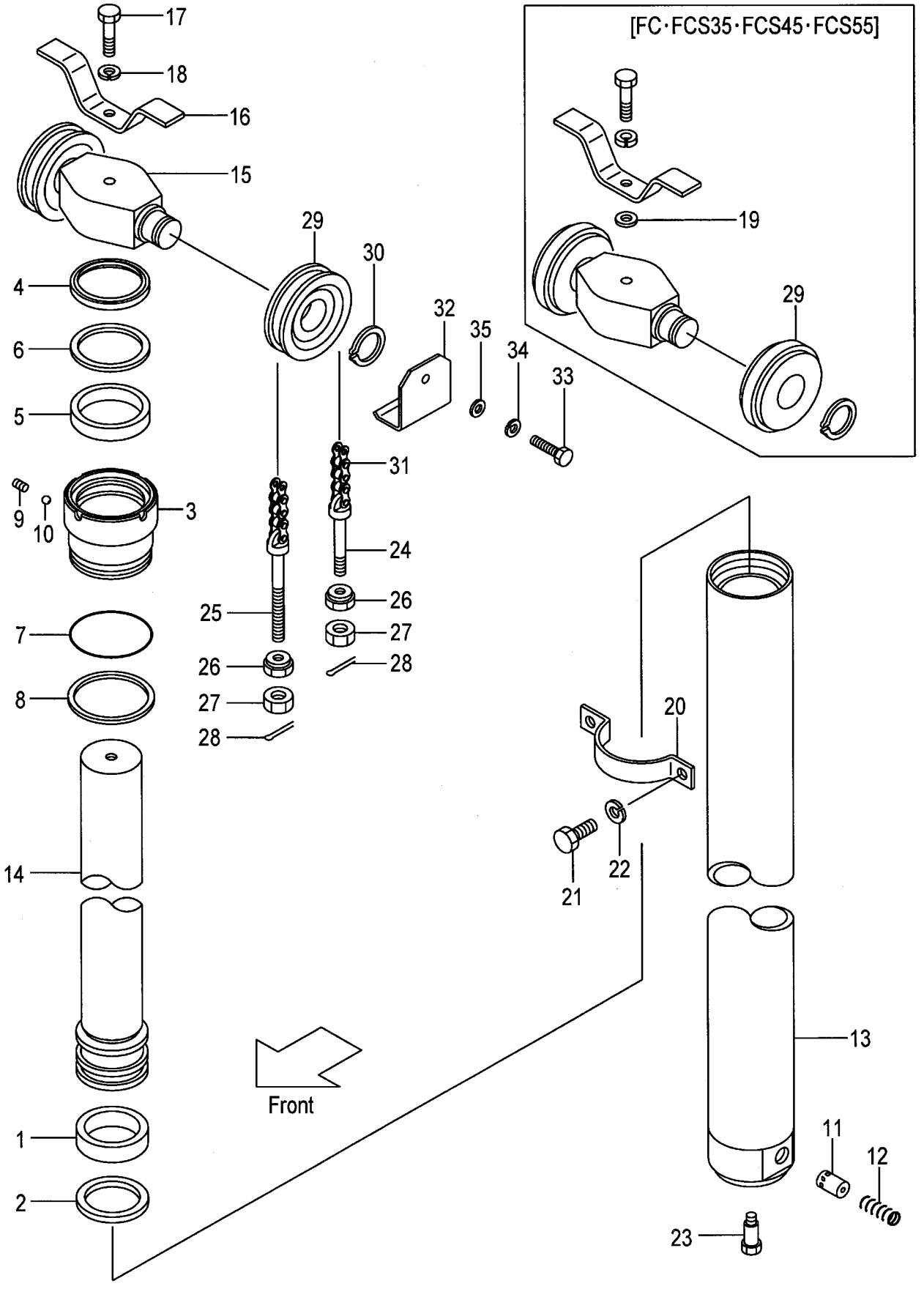

A:VFHM39A(2T)
B:VFHM39A(2.5T)

Item No	Part No.	Mark	Description		Req'd	Remarks : Serial No.
20	214A0-82651		SUPPORT,CYL	ｻﾎﾟｰﾄ	1	
21	01103-10020		BOLT	ﾎﾞﾙﾄ	2	
22	02011-00010		WASHER	ﾜｯｼｬ	2	
23	214A0-82831		BOLT	ﾎﾞﾙﾄ	1	
24	52672-72231		PIN,ANCHOR	ﾋﾟﾝ	2	
-	231A0-82001		PIN,ANCHOR	ﾋﾟﾝ	2	[FC][FCS35][FCS45][FCS55]
25	23500-82001		PIN,ANCHOR	ﾋﾟﾝ	2	
-	22218-42111		PIN,ANCHOR	ﾋﾟﾝ	2	[FC][FCS35][FCS45][FCS55]
26	22218-40191		NUT	ﾅｯﾄ	4	
27	01400-00018		NUT	ﾅｯﾄ	4	
28	02200-03030		PIN	ﾋﾟﾝ	4	
29	234A8-43501		SHEAVE	ｼｰﾌﾞ	2	
-	22208-40031		SHEAVE	ｼｰﾌﾞ	2	[FC][FCS35][FCS45][FCS55]
30	02100-00040		RING,SNAP	ｽﾅｯﾌﾟﾘﾝｸﾞ	2	
31	22679-45651		CHAIN,LEAF VFHM360	ﾁｪｰﾝ	2	
-	22679-45711		CHAIN,LEAF VFHM400	ﾁｪｰﾝ	2	
-	22679-45791		CHAIN,LEAF VFHM435	ﾁｪｰﾝ	2	
-	22679-45871		CHAIN,LEAF VFHM480	ﾁｪｰﾝ	2	
-	22679-45911		CHAIN,LEAF VFHM500	ﾁｪｰﾝ	2	
-	22679-45991		CHAIN,LEAF VFHM540	ﾁｪｰﾝ	2	
-	22679-45991		CHAIN,LEAF VFHM550	ﾁｪｰﾝ	2	
-	22679-46091		CHAIN,LEAF VFHM600	ﾁｪｰﾝ	2	
-	22679-46211		CHAIN,LEAF VFHM650	ﾁｪｰﾝ	2	
-	22679-46331		CHAIN,LEAF VFHM700	ﾁｪｰﾝ	2	
-	22679-46411		CHAIN,LEAF VFHM750	ﾁｪｰﾝ	2	
-	09001-10037		CHAIN,ROLLER VFHM360	ﾁｪｰﾝ	2	[FC][FCS35][FCS45][FCS55]
-	09001-10041		CHAIN,ROLLER VFHM400	ﾁｪｰﾝ	2	[FC][FCS35][FCS45][FCS55]
-	09001-10045		CHAIN,ROLLER VFHM435	ﾁｪｰﾝ	2	[FC][FCS35][FCS45][FCS55]
-	09001-10051		CHAIN,ROLLER VFHM480	ﾁｪｰﾝ	2	[FC][FCS35][FCS45][FCS55]
-	09001-10053		CHAIN,ROLLER VFHM500	ﾁｪｰﾝ	2	[FC][FCS35][FCS45][FCS55]
-	09001-10057		CHAIN,ROLLER VFHM540	ﾁｪｰﾝ	2	[FC][FCS35][FCS45][FCS55]
-	09001-10059		CHAIN,ROLLER VFHM550	ﾁｪｰﾝ	2	[FC][FCS35][FCS45][FCS55]
-	09001-10065		CHAIN,ROLLER VFHM600	ﾁｪｰﾝ	2	[FC][FCS35][FCS45][FCS55]
-	09001-10071		CHAIN,ROLLER VFHM650	ﾁｪｰﾝ	2	[FC][FCS35][FCS45][FCS55]
-	09001-10079		CHAIN,ROLLER VFHM700	ﾁｪｰﾝ	2	[FC][FCS35][FCS45][FCS55]
-	09001-10083		CHAIN,ROLLER VFHM750	ﾁｪｰﾝ	2	[FC][FCS35][FCS45][FCS55]
32	534A3-04001		COVER,CHAIN	ｶﾊﾞｰ	2	[EXE][EXN]
33	01100-16016		BOLT	ﾎﾞﾙﾄ	2	[EXE][EXN]
34	02010-00016		WASHER	ﾜｯｼｬ	2	[EXE][EXN]
35	02000-00016		WASHER	ﾜｯｼｬ	2	[EXE][EXN]
K1	277P0-59801		KIT,OVERHAUL	ｵｰﾊﾞﾎｰﾙｷｯﾄ	1	INC.1,2,4-8

FIG.259 LIFT CYLINDER(REAR) [VFHM39A]

(M5020820) リフトシリンダ(リヤー)

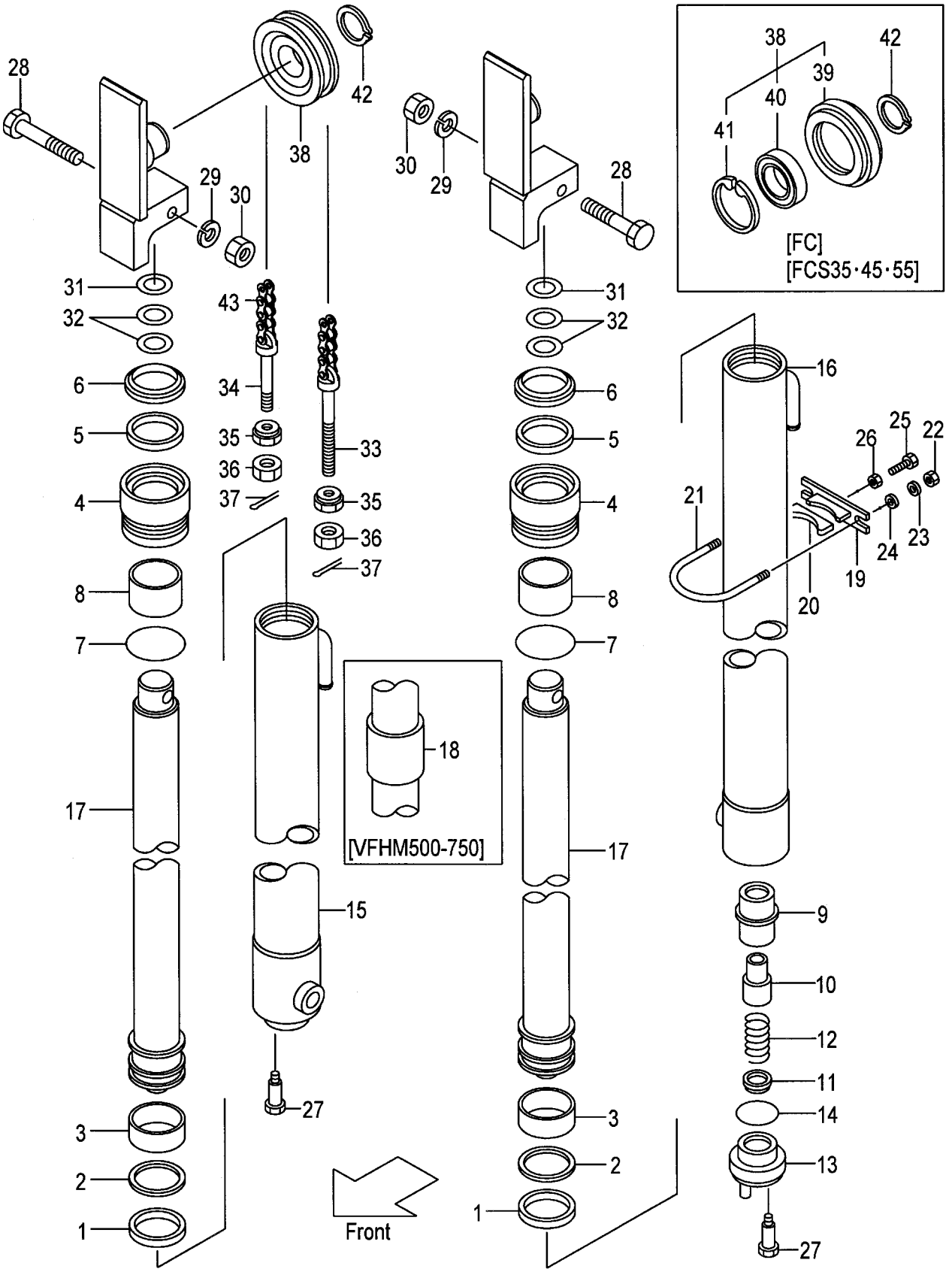

A:VFHM39A(2T)
B:VFHM39A(2.5T)

Item No	Part No.	Mark	Description	Req'd	Remarks : Serial No.
A1	277P0-81712		CYL-ASSY,LIFT,RH VFHM360 シリンダアッセン	1	INC.1-8,15,17
-	277P0-81722		CYL-ASSY,LIFT,RH VFHM400 シリンダアッセン	1	INC.1-8,15,17
-	277P0-81702		CYL-ASSY,LIFT,RH VFHM435 シリンダアッセン	1	INC.1-8,15,17
-	277P0-81732		CYL-ASSY,LIFT,RH VFHM480 シリンダアッセン	1	INC.1-8,15,17
-	277P0-81742		CYL-ASSY,LIFT,RH VFHM500 シリンダアッセン	1	INC.1-8,15,17,18
-	277P0-81752		CYL-ASSY,LIFT,RH VFHM540 シリンダアッセン	1	INC.1-8,15,17,18
-	277P0-81762		CYL-ASSY,LIFT,RH VFHM550 シリンダアッセン	1	INC.1-8,15,17,18
-	277P0-81772		CYL-ASSY,LIFT,RH VFHM600 シリンダアッセン	1	INC.1-8,15,17,18
-	277P0-81782		CYL-ASSY,LIFT,RH VFHM650 シリンダアッセン	1	INC.1-8,15,17,18
-	277P0-81792		CYL-ASSY,LIFT,RH VFHM700 シリンダアッセン	1	INC.1-8,15,17,18
-	277P0-81802		CYL-ASSY,LIFT,RH VFHM750 シリンダアッセン	1	INC.1-8,15,17,18
A2	277P0-81912		CYL-ASSY,LIFT,LH VFHM360 シリンダアッセン	1	INC.1-14,16,17
-	277P0-81922		CYL-ASSY,LIFT,LH VFHM400 シリンダアッセン	1	INC.1-14,16,17
-	277P0-81902		CYL-ASSY,LIFT,LH VFHM435 シリンダアッセン	1	INC.1-14,16,17
-	277P0-81932		CYL-ASSY,LIFT,LH VFHM480 シリンダアッセン	1	INC.1-14,16,17
-	277P0-81942		CYL-ASSY,LIFT,LH VFHM500 シリンダアッセン	1	INC.1-14,16,17,18
-	277P0-81952		CYL-ASSY,LIFT,LH VFHM540 シリンダアッセン	1	INC.1-14,16,17,18
-	277P0-81962		CYL-ASSY,LIFT,LH VFHM550 シリンダアッセン	1	INC.1-14,16,17,18
-	277P0-81972		CYL-ASSY,LIFT,LH VFHM600 シリンダアッセン	1	INC.1-14,16,17,18
-	277P0-81982		CYL-ASSY,LIFT,LH VFHM650 シリンダアッセン	1	INC.1-14,16,17,18
-	277P0-81992		CYL-ASSY,LIFT,LH VFHM700 シリンダアッセン	1	INC.1-14,16,17,18
-	277P0-82002		CYL-ASSY,LIFT,LH VFHM750 シリンダアッセン	1	INC.1-14,16,17,18
1	23650-83521	*	PACKING パッキング	2	
2	23650-83531	*	RING,BACK-UP リング	2	
3	27970-53141	*	WEARING ウエアリング	2	
4	232A8-42601		CAP,CYL キャップ	2	
5	214A8-42721	*	PACKING パッキング	2	
6	214A8-46001	*	SEAL,DUST シール	2	

FIG.259 LIFT CYLINDER(REAR) [VFHM39A]

(M5020820) リフトシリンダ(リヤー)

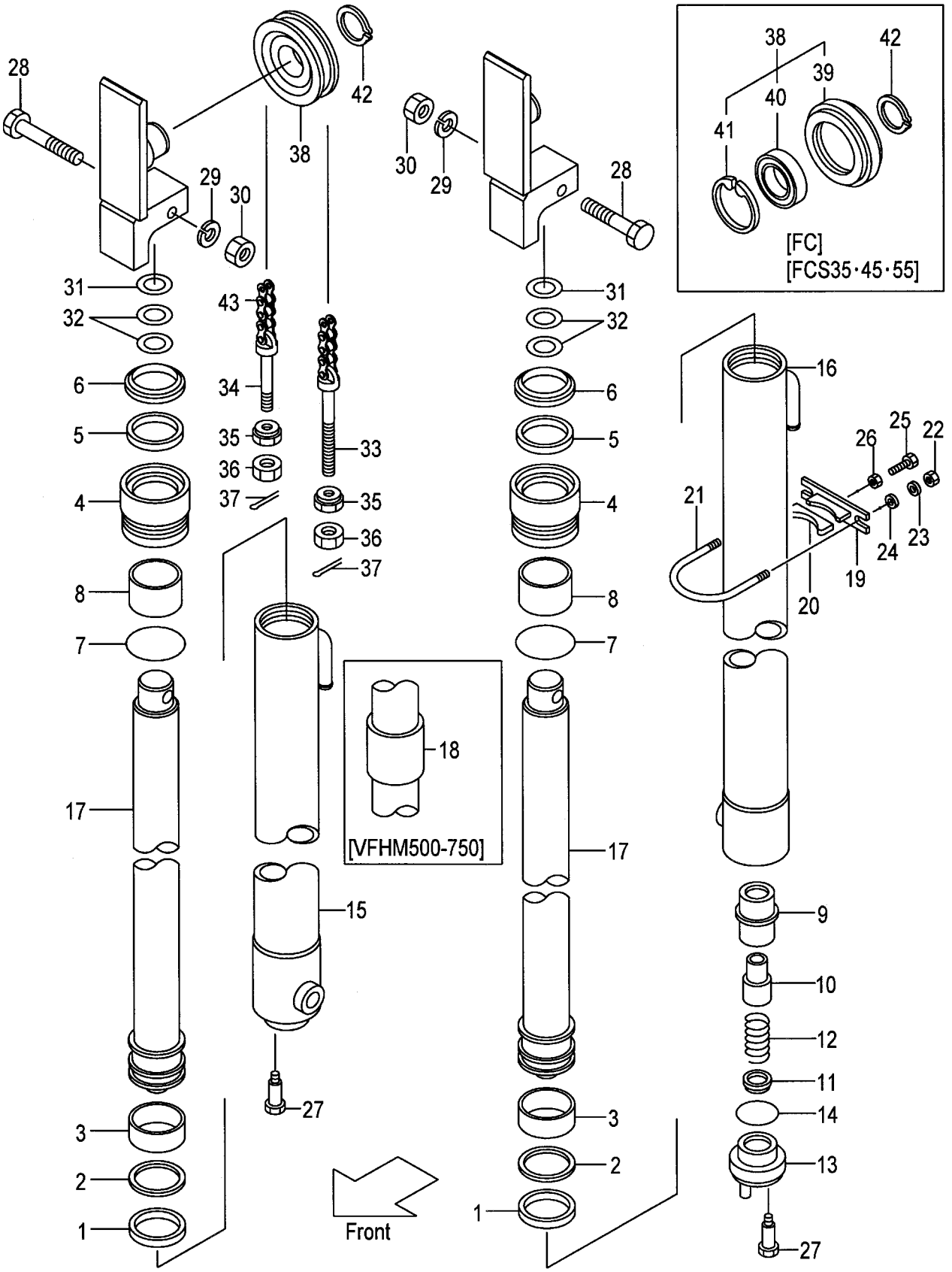

A:VFHM39A(2T)
B:VFHM39A(2.5T)

Item No	Part No.	Mark	Description		Req'd	Remarks : Serial No.
7	232A8-42631	*	O-RING	Oﾘﾝｸﾞ	2	
8	232A8-42621		BUSHING	ﾌﾞｯｼﾝｸﾞ	2	
9	53658-43021		SLEEVE	ｽﾘｰﾌﾞ	1	(LH)
10	53658-43011		PISTON	ﾋﾟｽﾄﾝ	1	(LH)
11	53658-43001		VALVE,CHECK	ﾊﾞﾙﾌﾞ	1	(LH)
12	53658-43031		SPRING	ｽﾌﾟﾘﾝｸﾞ	1	(LH)
13	53658-43041		PLUG	ﾌﾟﾗｸﾞ	1	(LH)
14	03320-00340		O-RING	Oﾘﾝｸﾞ	1	(LH)
15	277P0-81312		TUBE,CYL,RH VFHM360	ﾁｭｰﾌﾞ	1	
-	277P0-81322		TUBE,CYL,RH VFHM400	ﾁｭｰﾌﾞ	1	
-	277P0-81302		TUBE,CYL,RH VFHM435	ﾁｭｰﾌﾞ	1	
-	277P0-81332		TUBE,CYL,RH VFHM480	ﾁｭｰﾌﾞ	1	
-	277P0-81342		TUBE,CYL,RH VFHM500	ﾁｭｰﾌﾞ	1	
-	277P0-81352		TUBE,CYL,RH VFHM540	ﾁｭｰﾌﾞ	1	
-	277P0-81362		TUBE,CYL,RH VFHM550	ﾁｭｰﾌﾞ	1	
-	277P0-81372		TUBE,CYL,RH VFHM600	ﾁｭｰﾌﾞ	1	
-	277P0-81382		TUBE,CYL,RH VFHM650	ﾁｭｰﾌﾞ	1	
-	277P0-81392		TUBE,CYL,RH VFHM700	ﾁｭｰﾌﾞ	1	
-	277P0-81402		TUBE,CYL,RH VFHM750	ﾁｭｰﾌﾞ	1	
16	277P0-81512		TUBE,CYL,LH VFHM360	ﾁｭｰﾌﾞ	1	
-	277P0-81522		TUBE,CYL,LH VFHM400	ﾁｭｰﾌﾞ	1	
-	277P0-81502		TUBE,CYL,LH VFHM435	ﾁｭｰﾌﾞ	1	
-	277P0-81532		TUBE,CYL,LH VFHM480	ﾁｭｰﾌﾞ	1	
-	277P0-81542		TUBE,CYL,LH VFHM500	ﾁｭｰﾌﾞ	1	
-	277P0-81552		TUBE,CYL,LH VFHM540	ﾁｭｰﾌﾞ	1	
-	277P0-81562		TUBE,CYL,LH VFHM550	ﾁｭｰﾌﾞ	1	
-	277P0-81572		TUBE,CYL,LH VFHM600	ﾁｭｰﾌﾞ	1	
-	277P0-81582		TUBE,CYL,LH VFHM650	ﾁｭｰﾌﾞ	1	
-	277P0-81592		TUBE,CYL,LH VFHM700	ﾁｭｰﾌﾞ	1	
-	277P0-81602		TUBE,CYL,LH VFHM750	ﾁｭｰﾌﾞ	1	
17	277P0-81111		ROD,PISTON VFHM360	ﾛｯﾄﾞ	2	
-	277P0-81121		ROD,PISTON VFHM400	ﾛｯﾄﾞ	2	
-	277P0-81101		ROD,PISTON VFHM435	ﾛｯﾄﾞ	2	
-	277P0-81131		ROD,PISTON VFHM480	ﾛｯﾄﾞ	2	
-	277P0-81141		ROD,PISTON VFHM500	ﾛｯﾄﾞ	2	
-	277P0-81151		ROD,PISTON VFHM540	ﾛｯﾄﾞ	2	
-	277P0-81161		ROD,PISTON VFHM550	ﾛｯﾄﾞ	2	
-	277P0-81171		ROD,PISTON VFHM600	ﾛｯﾄﾞ	2	
-	277P0-81181		ROD,PISTON VFHM650	ﾛｯﾄﾞ	2	
-	277P0-81191		ROD,PISTON VFHM700	ﾛｯﾄﾞ	2	
-	277P0-81201		ROD,PISTON VFHM750	ﾛｯﾄﾞ	2	
18	23650-83561		SPACER VFHM500	ｽﾍﾟｰｻ	2	
-	23650-83551		SPACER VFHM540	ｽﾍﾟｰｻ	2	
-	23650-83561		SPACER VFHM550	ｽﾍﾟｰｻ	2	
-	23650-83571		SPACER VFHM600	ｽﾍﾟｰｻ	2	
-	29690-83011		SPACER VFHM650	ｽﾍﾟｰｻ	2	
-	29690-83021		SPACER VFHM700	ｽﾍﾟｰｻ	2	
-	29690-83021		SPACER VFHM750	ｽﾍﾟｰｻ	2	
A3	215E8-42171		SUPPORT-ASSY,CYL	ｻﾎﾟｰﾄｱｯｾﾝ	2	(VFHM360-550) INC.19,20
-	215E8-42171		SUPPORT-ASSY,CYL	ｻﾎﾟｰﾄｱｯｾﾝ	4	(VFHM600-750) INC.19,20

A:VFHM39A(2T)
B:VFHM39A(2.5T)

Item No	Part No.	Mark	Description		Req'd	Remarks : Serial No.
19	215E8-42181		SUPPORT,CYL	ｻﾎﾟｰﾄ	2	(VFHM360-550)
-	215E8-42181		SUPPORT,CYL	ｻﾎﾟｰﾄ	4	(VFHM600-750)
20	24868-42111		RUBBER	ﾗﾊﾞｰ	2	(VFHM360-550)
-	24868-42111		RUBBER	ﾗﾊﾞｰ	4	(VFHM600-750)
21	234A8-42551		U-BOLT	Uﾎﾞﾙﾄ	2	(VFHM360-550)
-	234A8-42551		U-BOLT	Uﾎﾞﾙﾄ	4	(VFHM600-750)
22	234A8-42561		NUT	ﾅｯﾄ	4	(VFHM360-550)
-	234A8-42561		NUT	ﾅｯﾄ	8	(VFHM600-750)
23	02010-20010		WASHER	ﾜｯｼｬ	4	(VFHM360-550)
-	02010-20010		WASHER	ﾜｯｼｬ	8	(VFHM600-750)
24	02000-20010		WASHER	ﾜｯｼｬ	4	(VFHM360-550)
-	02000-20010		WASHER	ﾜｯｼｬ	8	(VFHM600-750)
25	232A8-42201		BOLT	ﾎﾞﾙﾄ	2	(VFHM360-550)
-	232A8-42201		BOLT	ﾎﾞﾙﾄ	4	(VFHM600-750)
26	234A8-42571		NUT	ﾅｯﾄ	2	(VFHM360-550)
-	234A8-42571		NUT	ﾅｯﾄ	4	(VFHM600-750)
27	214A8-42661		BOLT	ﾎﾞﾙﾄ	2	
28	01100-12070		BOLT	ﾎﾞﾙﾄ	2	
29	02010-00012		WASHER	ﾜｯｼｬ	2	
30	01400-00012		NUT	ﾅｯﾄ	2	
31	23917-42191		SHIM,T-1.0	ｼﾑ	10	
32	22679-43831		SHIM,T-0.5	ｼﾑ	10	
33	52672-72231		PIN,ANCHOR	ﾋﾟﾝ	2	
-	22218-42111		PIN,ANCHOR	ﾋﾟﾝ	2	[FC][FCS35][FCS45][FCS55]
34	23500-82001		PIN,ANCHOR	ﾋﾟﾝ	2	
-	23658-42531		PIN,ANCHOR	ﾋﾟﾝ	2	[FC][FCS35][FCS45][FCS55]
35	22218-40191		NUT	ﾅｯﾄ	4	
36	01400-00018		NUT	ﾅｯﾄ	4	
37	02200-03030		PIN	ﾋﾟﾝ	4	
38	277P0-83001		SHEAVE	ｼｰﾌﾞ	2	
-	577P3-74021		SHEAVE	ｼｰﾌﾞ	2	[FC][FCS35][FCS45][FCS55]
						INC.39-41
39	577P3-74031		BODY,SHEAVE	ﾎﾞﾃﾞｨ	2	[FC][FCS35][FCS45][FCS55]
40	03042-06308		BEARING	ﾍﾞｱﾘﾝｸﾞ	2	[FC][FCS35][FCS45][FCS55]
41	02110-00090		RING,SNAP	ｽﾅｯﾌﾟﾘﾝｸﾞ	2	[FC][FCS35][FCS45][FCS55]
42	02100-00040		RING,SNAP	ｽﾅｯﾌﾟﾘﾝｸﾞ	2	
43	22679-45831		CHAIN,LEAF VFHM360	ﾁｪｰﾝ	2	
-	22679-45891		CHAIN,LEAF VFHM400	ﾁｪｰﾝ	2	
-	22679-45971		CHAIN,LEAF VFHM435	ﾁｪｰﾝ	2	
-	22679-46031		CHAIN,LEAF VFHM480	ﾁｪｰﾝ	2	
-	22679-46091		CHAIN,LEAF VFHM500	ﾁｪｰﾝ	2	
-	22679-46151		CHAIN,LEAF VFHM540	ﾁｪｰﾝ	2	
-	22679-46171		CHAIN,LEAF VFHM550	ﾁｪｰﾝ	2	
-	22679-46271		CHAIN,LEAF VFHM600	ﾁｪｰﾝ	2	
-	22679-46391		CHAIN,LEAF VFHM650	ﾁｪｰﾝ	2	
-	22679-46511		CHAIN,LEAF VFHM700	ﾁｪｰﾝ	2	
-	22679-46591		CHAIN,LEAF VFHM750	ﾁｪｰﾝ	2	
-	09001-10049		CHAIN,ROLLER VFHM360	ﾁｪｰﾝ	2	[FC][FCS35][FCS45][FCS55]
-	09001-10053		CHAIN,ROLLER VFHM400	ﾁｪｰﾝ	2	[FC][FCS35][FCS45][FCS55]
-	09001-10057		CHAIN,ROLLER VFHM435	ﾁｪｰﾝ	2	[FC][FCS35][FCS45][FCS55]

A:VFHM39A(2T)
B:VFHM39A(2.5T)

Item No	Part No.	Mark	Description	Req'd	Remarks : Serial No.
-	09001-10063		CHAIN,ROLLER VFHM480 ﾁｪｰﾝ	2	[FC][FCS35][FCS45][FCS55]
-	09001-10065		CHAIN,ROLLER VFHM500 ﾁｪｰﾝ	2	[FC][FCS35][FCS45][FCS55]
-	09001-10069		CHAIN,ROLLER VFHM540 ﾁｪｰﾝ	2	[FC][FCS35][FCS45][FCS55]
-	09001-10071		CHAIN,ROLLER VFHM550 ﾁｪｰﾝ	2	[FC][FCS35][FCS45][FCS55]
-	09001-10077		CHAIN,ROLLER VFHM600 ﾁｪｰﾝ	2	[FC][FCS35][FCS45][FCS55]
-	09001-10083		CHAIN,ROLLER VFHM650 ﾁｪｰﾝ	2	[FC][FCS35][FCS45][FCS55]
-	09001-10091		CHAIN,ROLLER VFHM700 ﾁｪｰﾝ	2	[FC][FCS35][FCS45][FCS55]
-	09001-10095		CHAIN,ROLLER VFHM750 ﾁｪｰﾝ	2	[FC][FCS35][FCS45][FCS55]
K1	277P0-89811		KIT,OVERHAUL ｵｰﾊﾞｰﾎｰﾙｷｯﾄ	2	INC.1-3,5-7

FIG.260 MAST PIPING [VFHM39A]

(M5020830) マストパイピング

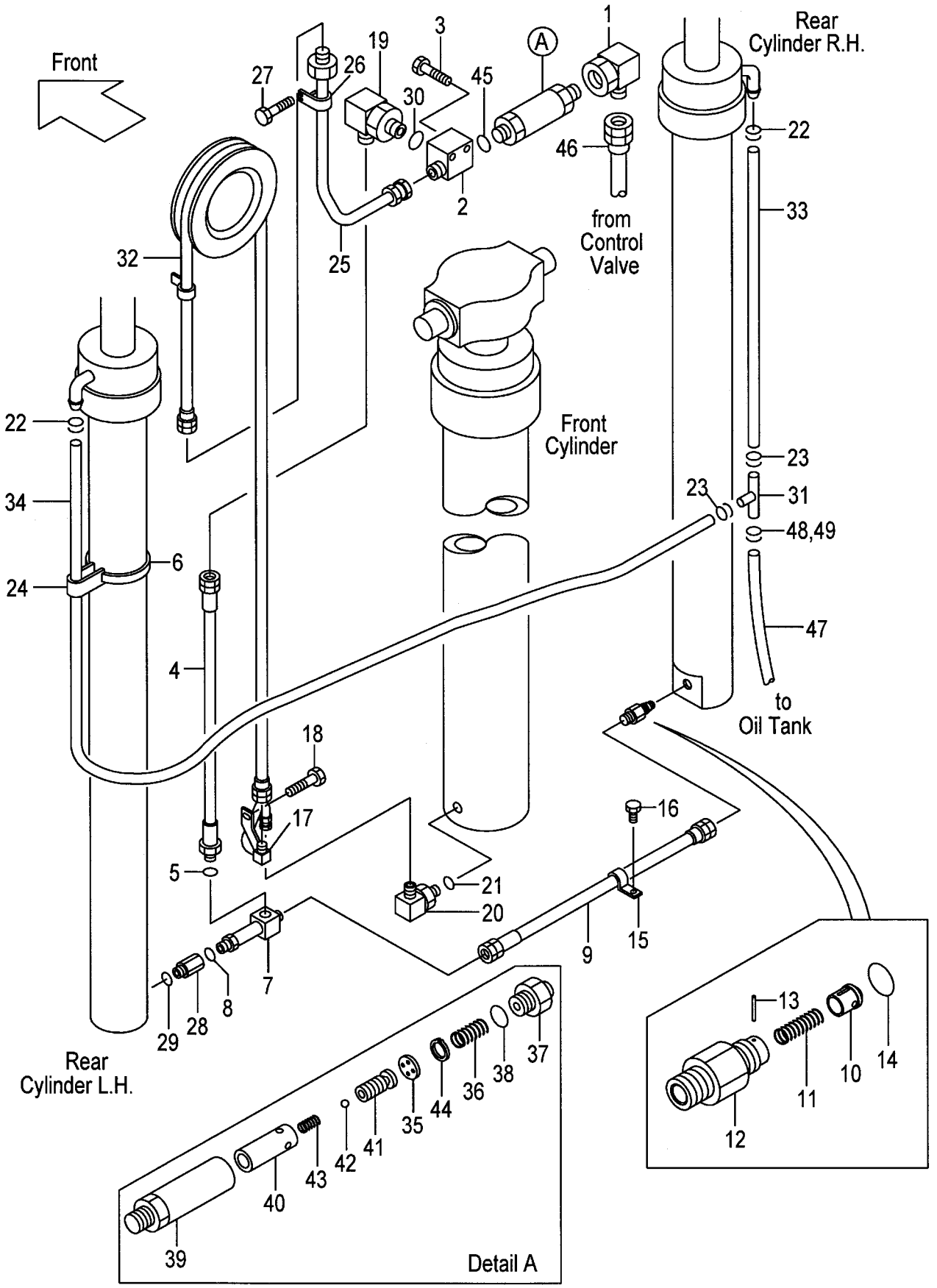

A:VFHM39A(2T)
B:VFHM39A(2.5T)

Item No	Part No.	Mark	Description		Req'd	Remarks : Serial No.
1	62150-14321		ELBOW	ｴﾙﾎﾞ	1	
2	277P0-92061		THREE-WAY	ｽﾘｰｳｪｲ	1	
3	01184-10060		BOLT	ﾎﾞﾙﾄ	2	
A1	239A0-92101		HOSE-ASSY	ﾎｰｽｱｯｾﾝ	1	INC.4,5
4	232A0-92141		HOSE	ﾎｰｽ	1	
5	03320-00180		O-RING	Oﾘﾝｸﾞ	1	
6	04913-21380		BAND	ﾊﾞﾝﾄﾞ	2	
A2	234A8-41101		THREE-WAY-ASSY	ｽﾘｰｳｪｲｱｯｾﾝ	1	INC.7,8
7	NO PART NO.	#	THREE-WAY	ｽﾘｰｳｪｲ	1	
8	03320-00140		O-RING	Oﾘﾝｸﾞ	1	
9	277T0-62071		HOSE	ﾎｰｽ	1	
A3	234A8-40701		VALVE-ASSY,CUT	ｶｯﾄﾊﾞﾙﾌﾞｱｯｾﾝ	1	INC.10-14
10	234A8-42602		PISTON	ﾋﾟｽﾄﾝ	1	
11	234A8-42611		SPRING	ｽﾌﾟﾘﾝｸﾞ	1	
12	234A8-42622		NIPPLE	ﾆｯﾌﾟﾙ	1	
13	02270-01014		PIN	ﾋﾟﾝ	1	
14	03320-00140		O-RING	Oﾘﾝｸﾞ	1	
15	214A8-43081		CLIP	ｸﾘｯﾌﾟ	1	
16	01184-10020		BOLT & WASHER	ﾎﾞﾙﾄ & ﾜｯｼｬ	1	
17	277T0-90151		PIPE	ﾊﾟｲﾌﾟ	1	
18	01186-10020		BOLT & WASHER	ﾎﾞﾙﾄ & ﾜｯｼｬ	1	
19	04150-00404		ELBOW	ｴﾙﾎﾞ	1	
A4	229F0-91001		ELBOW-ASSY	ｴﾙﾎﾞｱｯｾﾝ	1	INC.20,21
20	NO PART NO.	#	ELBOW	ｴﾙﾎﾞ	1	
21	03320-00240		O-RING	Oﾘﾝｸﾞ	1	
22	04911-00018		CLIP	ｸﾘｯﾌﾟ	2	
-	24329-46201		CLIP	ｸﾘｯﾌﾟ	2	[FC][RTL][CS35][FCS35][FCS45] [FCS55]
23	04911-00018		CLIP	ｸﾘｯﾌﾟ	2	
-	04911-00021		CLIP	ｸﾘｯﾌﾟ	2	[FC][RTL][CS35][FCS35][FCS45] [FCS55]
24	23678-42401		BAND,HOSE	ﾊﾞﾝﾄﾞ	2	
-	53675-54101		BAND,HOSE	ﾊﾞﾝﾄﾞ	2	[FC][RTL][CS35][FCS35][FCS45] [FCS55]
25	239A0-90161		PIPE	ﾊﾟｲﾌﾟ	1	INC.26
26	23200-62171		CLIP	ｸﾘｯﾌﾟ	1	
27	01183-06016		BOLT & WASHER	ﾎﾞﾙﾄ & ﾜｯｼｬ	2	
28	234A0-62111		ADAPTER	ｱﾀﾞﾌﾟﾀ	1	
29	03320-00140		O-RING	Oﾘﾝｸﾞ	1	
30	03320-00180		O-RING	Oﾘﾝｸﾞ	1	
31	23679-45051		THREE-WAY	ｽﾘｰｳｪｲ	1	
-	53675-55051		THREE-WAY	ｽﾘｰｳｪｲ	1	[FC][RTL][CS35][FCS35][FCS45] [FCS55]
32	04601-44200		HOSE VFHM360	ﾎｰｽ	1	
-	04601-44224		HOSE VFHM400	ﾎｰｽ	1	
-	04601-44249		HOSE VFHM435	ﾎｰｽ	1	
-	04601-44279		HOSE VFHM480	ﾎｰｽ	1	
-	04601-44299		HOSE VFHM500	ﾎｰｽ	1	
-	04601-44323		HOSE VFHM540	ﾎｰｽ	1	
-	04601-44331		HOSE VFHM550	ﾎｰｽ	1	

FIG.260 MAST PIPING [VFHM39A]

(M5020830) マストパイピング

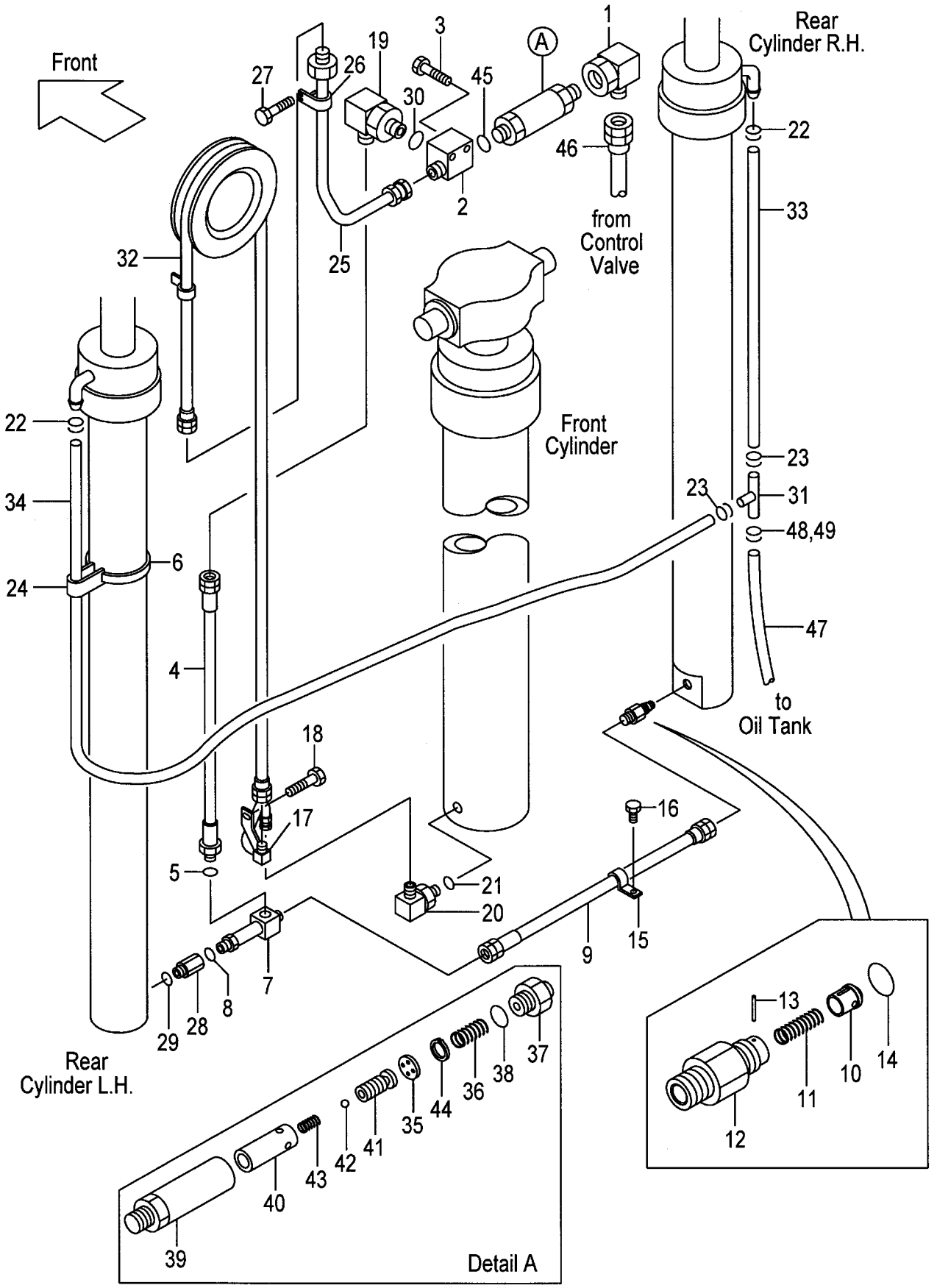

A:VFHM39A(2T)
B:VFHM39A(2.5T)

Item No	Part No.	Mark	Description	Req'd	Remarks : Serial No.
-	04601-44367		HOSE VFHM600 ホース	1	
-	04601-44410		HOSE VFHM650 ホース	1	
-	04601-44453		HOSE VFHM700 ホース	1	
-	04601-44485		HOSE VFHM750 ホース	1	
33	23678-40080		TUBE,RH VFHM360 チューブ゛	1	
-	23678-40095		TUBE,RH VFHM400 チューブ゛	1	
-	23678-40105		TUBE,RH VFHM435 チューブ゛	1	
-	23678-40120		TUBE,RH VFHM480 チューブ゛	1	
-	23678-40130		TUBE,RH VFHM500 チューブ゛	1	
-	23678-40145		TUBE,RH VFHM540 チューブ゛	1	
-	23678-40150		TUBE,RH VFHM550 チューブ゛	1	
-	23678-40165		TUBE,RH VFHM600 チューブ゛	1	
-	23678-40190		TUBE,RH VFHM650 チューブ゛	1	
-	23678-40210		TUBE,RH VFHM700 チューブ゛	1	
-	23678-40255		TUBE,RH VFHM750 チューブ゛	1	
-	04710-04080		HOSE,RH VFHM360 ホース	1	[FC][RTL][CS35][FCS35][FCS45] [FCS55]
-	04710-04095		HOSE,RH VFHM400 ホース	1	[FC][RTL][CS35][FCS35][FCS45] [FCS55]
-	04710-04105		HOSE,RH VFHM435 ホース	1	[FC][RTL][CS35][FCS35][FCS45] [FCS55]
-	04710-04120		HOSE,RH VFHM480 ホース	1	[FC][RTL][CS35][FCS35][FCS45] [FCS55]
-	04710-04130		HOSE,RH VFHM500 ホース	1	[FC][RTL][CS35][FCS35][FCS45] [FCS55]
-	04710-04145		HOSE,RH VFHM540 ホース	1	[FC][RTL][CS35][FCS35][FCS45] [FCS55]
-	04710-04150		HOSE,RH VFHM550 ホース	1	[FC][RTL][CS35][FCS35][FCS45] [FCS55]
-	04710-04165		HOSE,RH VFHM600 ホース	1	[FC][RTL][CS35][FCS35][FCS45] [FCS55]
-	04710-04190		HOSE,RH VFHM650 ホース	1	[FC][RTL][CS35][FCS35][FCS45] [FCS55]
-	04710-04210		HOSE,RH VFHM700 ホース	1	[FC][RTL][CS35][FCS35][FCS45] [FCS55]
-	04710-04225		HOSE,RH VFHM750 ホース	1	[FC][RTL][CS35][FCS35][FCS45] [FCS55]
34	23678-40145		TUBE,LH VFHM360 チューブ゛	1	
-	23678-40160		TUBE,LH VFHM400 チューブ゛	1	
-	23678-40170		TUBE,LH VFHM435 チューブ゛	1	
-	23678-40185		TUBE,LH VFHM480 チューブ゛	1	
-	23678-40195		TUBE,LH VFHM500 チューブ゛	1	
-	23678-40210		TUBE,LH VFHM540 チューブ゛	1	
-	23678-40215		TUBE,LH VFHM550 チューブ゛	1	
-	23678-40230		TUBE,LH VFHM600 チューブ゛	1	
-	23678-40255		TUBE,LH VFHM650 チューブ゛	1	
-	23678-40275		TUBE,LH VFHM700 チューブ゛	1	
-	23678-40290		TUBE,LH VFHM750 チューブ゛	1	
-	04710-04145		HOSE,LH VFHM360 ホース	1	[FC][RTL][CS35][FCS35][FCS45] [FCS55]

FIG.260 MAST PIPING [VFHM39A]

(M5020830) マストパイピング

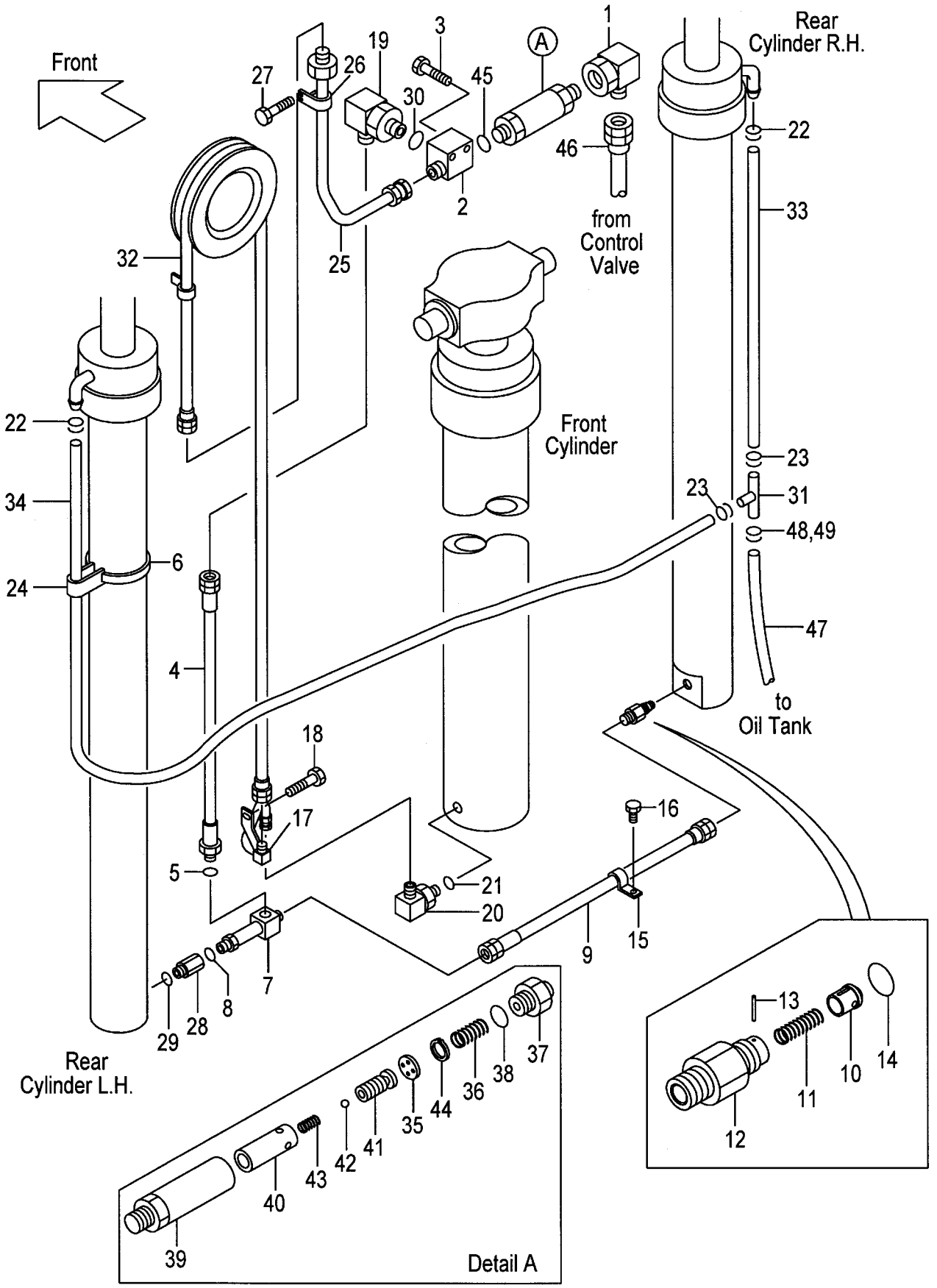

A:VFHM39A(2T)
B:VFHM39A(2.5T)

Item No	Part No.	Mark	Description		Req'd	Remarks : Serial No.
-	04710-04160		HOSE,LH VFHM400	ホース	1	[FC][RTL][CS35][FCS35][FCS45][FCS55]
-	04710-04170		HOSE,LH VFHM435	ホース	1	[FC][RTL][CS35][FCS35][FCS45][FCS55]
-	04710-04185		HOSE,LH VFHM480	ホース	1	[FC][RTL][CS35][FCS35][FCS45][FCS55]
-	04710-04195		HOSE,LH VFHM500	ホース	1	[FC][RTL][CS35][FCS35][FCS45][FCS55]
-	04710-04210		HOSE,LH VFHM540	ホース	1	[FC][RTL][CS35][FCS35][FCS45][FCS55]
-	04710-04215		HOSE,LH VFHM550	ホース	1	[FC][RTL][CS35][FCS35][FCS45][FCS55]
-	04710-04230		HOSE,LH VFHM600	ホース	1	[FC][RTL][CS35][FCS35][FCS45][FCS55]
-	04710-04255		HOSE,LH VFHM650	ホース	1	[FC][RTL][CS35][FCS35][FCS45][FCS55]
-	04710-04275		HOSE,LH VFHM700	ホース	1	[FC][RTL][CS35][FCS35][FCS45][FCS55]
-	04710-04290		HOSE,LH VFHM750	ホース	1	[FC][RTL][CS35][FCS35][FCS45][FCS55]
A5	234A8-41001		REGULATOR-ASSY,FLOW	レギュレータアッセン	1	INC.35-44
35	NO PART NO.	#	PLATE	プレート	1	
36	27979-43101		SPRING	スプリング	1	
37	NO PART NO.	#	NIPPLE	ニップル	1	
38	03300-00280		O-RING	Oリング	1	
39	NO PART NO.	#	CASE	ケース	1	
40	NO PART NO.	#	SLEEVE	スリーブ	1	
41	NO PART NO.	#	PISTON	ピストン	1	
42	24459-42951		BALL,NYLON	ボール	1	
43	214A8-44151		SPRING	スプリング	1	
44	02110-00018		RING,SNAP	スナップリング	1	
45	03320-00180		O-RING	Oリング	1	
46	277T0-92131		HOSE	ホース	1	
47	23678-40110		TUBE	チューブ	1	
-	04710-04125		HOSE	ホース	1	[FC][RTL][CS35][FCS35][FCS45][FCS55]
48	04911-00018		CLIP	クリップ	1	
-	04911-00021		CLIP	クリップ	1	[FC][RTL][CS35][FCS35][FCS45][FCS55]
49	04914-00016		CLIP	クリップ	1	
-	04911-00021		CLIP	クリップ	1	[FC][RTL][CS35][FCS35][FCS45][FCS55]

PARTS NUMBER INDEX

Part No.	Fig.No.	Part No.	Fig.No.	Part No.	Fig.No.	Part No.	Fig.No.
B-B3613-13001	92	B-21011-31702	198	B-23451-02212	92	B-30697-51102	243
B-B3613-13001	93	B-21011-31702	198	B-23451-02212	93	B-30697-51201	243
B-B6127-20612	218	B-21011-31702	198	B-23641-00313	92	B-30697-51202	243
B-B6341-01401	218	B-21011-32404	196	B-23641-00313	93	B-30697-51301	243
B-B6351-01401	218	B-21011-32404	197	B-23641-01609	92	B-30697-51302	243
B-B670B-00086	218	B-21011-32404	198	B-23641-01609	93	B-30697-51401	243
B-B670B-00087	218	B-21011-32404	198	B-23641-01610	92	B-30697-51402	243
B-C0003-30301	192	B-21011-32404	198	B-23641-01610	93	B-30697-51501	243
B-C0003-30301	193	B-21011-32801	196	B-23641-02218	92	B-30697-51502	243
B-C0003-30301	194	B-21011-32801	197	B-23641-02218	93	B-30697-51601	243
B-21001-00106	195	B-21011-32801	198	B-23641-02227	92	B-30697-51602	243
B-21001-00106	196	B-21011-32801	198	B-23641-02227	93	B-30697-51701	243
B-21001-00106	197	B-21011-32801	198	B-23641-02508	92	B-30697-51702	243
B-21001-00106	198	B-21013-36432	191	B-23641-02508	93	B-30697-51801	243
B-21001-00106	198	B-21013-36432	192	B-23641-03314	92	B-30697-51802	243
B-21001-00106	198	B-21013-36432	193	B-23641-03314	93	B-30697-51901	243
B-21001-00689	196	B-21013-36432	194	B-23641-03716	92	B-30697-51902	243
B-21001-00689	197	B-21013-36432	196	B-23641-03716	92	B-30697-52001	243
B-21001-00689	198	B-21013-36433	191	B-23641-03716	93	B-30697-52002	243
B-21001-00689	198	B-21013-36433	192	B-23641-03716	93	B-30697-52101	243
B-21001-00689	198	B-21013-36433	193	B-23641-04303	92	B-30697-52102	243
B-21001-90408	196	B-21013-36433	194	B-23641-04303	93	B-30697-52201	243
B-2101A-30016	191	B-21013-36433	197	B-23642-00911	92	B-30697-52202	243
B-2101A-30016	192	B-21013-37344	191	B-23642-00911	93	B-30697-52301	243
B-2101A-30016	193	B-21013-37344	192	B-23643-00296	92	B-30697-52302	243
B-2101A-30016	194	B-21013-37344	193	B-23643-00296	93	B-30697-52401	243
B-21011-30134	191	B-21013-37344	194	B-23643-00526	92	B-30697-52402	243
B-21011-30134	192	B-21013-37344	195	B-23643-00526	93	B-30697-52501	243
B-21011-30134	193	B-21013-37349	191	B-23643-00618	92	B-30697-52502	243
B-21011-30134	194	B-21013-37349	192	B-23643-00618	93	B-30697-52601	243
B-21011-30507	196	B-21013-37349	192	B-23711-01922	92	B-30697-52602	243
B-21011-30507	198	B-21013-37349	193	B-23711-01922	93	B-30697-52701	243
B-21011-30507	198	B-21013-37349	193	B-23711-03701	92	B-30697-52702	243
B-21011-30507	198	B-21013-37349	194	B-23711-03701	93	B-30697-52801	243
B-21011-30528	197	B-21013-37349	194	B-30121-50102	243	B-30697-52802	243
B-21011-30603	196	B-21013-37349	195	B-30131-40017	243	B-30697-52901	243
B-21011-30603	197	B-21013-39701	192	B-30131-50018	243	B-30697-52902	243
B-21011-30603	198	B-21013-39701	193	B-30141-35012	218	B-3070A-00103	218
B-21011-30603	198	B-21013-39701	194	B-30141-91049	243	B-3070B-00217	218
B-21011-30603	198	B-21013-39701	198	B-30151-03006	218	B-30961-03012	218
B-21011-30604	196	B-21013-39701	198	B-30161-50046	243	B-30961-04012	243
B-21011-30604	197	B-21013-39701	198	B-30161-91774	243	B-91111-60102	196
B-21011-30604	198	B-21021-30103	192	B-30191-30025	218	B-91111-60102	197
B-21011-30604	198	B-21021-30104	192	B-30191-40025	243	B-91111-60102	198
B-21011-30604	198	B-21031-30103	193	B-30286-95303	243	B-91111-60102	198
B-21011-30618	197	B-21031-30104	193	B-30286-95303	243	B-91111-60102	198
B-21011-30702	196	B-21041-30103	194	B-30286-95303	243	B-91511-08180	195
B-21011-30702	197	B-21041-30104	194	B-30286-95303	243	B-92703-06181	195
B-21011-30702	198	B-21731-30306	195	B-30286-95303	243	B-92703-06181	196
B-21011-30702	198	B-21731-30307	195	B-30296-11903	243	B-92703-06181	197
B-21011-30702	198	B-21731-30406	195	B-30296-11903	243	B-92703-06181	198
B-21011-31011	196	B-21731-30502	195	B-30311-01403	218	B-92703-06181	198
B-21011-31011	197	B-21731-30613	195	B-30421-30005	218	B-92703-06181	198
B-21011-31011	198	B-21731-30703	195	B-30431-35009	218	B-93118-08652	191
B-21011-31011	198	B-21731-30802	195	B-30461-50039	243	B-93118-08652	192
B-21011-31011	198	B-21733-40212	195	B-3050A-00093	243	B-93118-08652	193
B-21011-31105	191	B-23451-02016	92	B-3050B-00119	243	B-93118-08652	194
B-21011-31106	191	B-23451-02016	93	B-30551-91003	243	B-93128-10082	191
B-21011-31702	196	B-23451-02106	92	B-3065B-00211	218	B-93128-10082	192
B-21011-31702	197	B-23451-02106	93	B-30697-51101	243	B-93128-10082	193

PARTS NUMBER INDEX

Part No.	Fig.No.	Part No.	Fig.No.	Part No.	Fig.No.	Part No.	Fig.No.
B-93128-10082	194	01100-06012	136	01103-08025	85	01120-08035	142
B-93364-08052	195	01100-06012	137	01103-08025	85A	01120-10035	138
B-94101-20512	92	01100-06020	69	01103-08035	82	01123-10045	76
B-94101-20512	93	01100-06055	205	01103-08040	81	01141-06012	96
B-94721-38151	92	01100-06055	206	01103-08045	82	01141-06012	97
B-94721-38151	93	01100-06055	207	01103-08045	85	01141-06012	97
B-95111-01200	195	01100-06055	208	01103-08060	85	01141-06012	97
B-95112-06000	218	01100-06055	209	01103-08060	85A	01141-06012	98
B-95113-01800	196	01100-08020	51	01103-10016	80	01170-04012	26
B-95113-02400	195	01100-08020	54	01103-10020	77	01170-05045	85
B-95121-06000	92	01100-08020	55	01103-10020	250	01170-05045	85A
B-95121-06000	92	01100-08020	56	01103-10020	258	01171-06025	127
B-95121-06000	93	01100-08020	57	01103-10030	76	01171-06025	128
B-95121-06000	93	01100-08020	58	01103-10030	78	01181-08016	169
B-95121-07000	218	01100-08020	71	01103-10030	81	01181-08016	169A
B-95133-00500	197	01100-08020	72	01103-10035	78	01181-08016	170
B-95151-06300	92	01100-08025	135	01103-10035	78	01181-08016	171
B-95151-06300	93	01100-08025	235	01103-10040	78	01181-08016	171
B-95713-06000	218	01100-08045	28	01103-10050	78	01181-08016	172
B-96111-10613	218	01100-08045	28A	01103-10060	144	01181-08016	174
B-96401-30159	218	01100-08045	29	01103-10060	144	01182-08025	23A
B-97123-01111	195	01100-08045	74	01103-10060	146	01182-08025	24
HC26094-17021	94A	01100-08045	78	01103-10060	147	01182-08025	25
HC32G4-10101	94A	01100-08050	156	01103-10065	81	01182-10030	31
HC516G2-42411	94A	01100-10030	143	01103-10097	1	01183-05010	26
LB24H8-10131	245	01100-10030	144	01103-10097	2	01183-05010	161
R-022-24238-00	186	01100-10030	144	01103-10120	138	01183-05010	162
R-022-24238-00	188	01100-10030	146	01103-10120	139	01183-05012	238
R-400-50647-03	186	01100-10030	147	01103-10120	139	01183-05012	238
R-402-00012-12	186	01100-12020	133	01103-10120	140	01183-06010	228
R-402-00012-12	188	01100-12030	96	01103-10120	141	01183-06012	200
R-402-00710-12	187	01100-12030	98	01103-14040	243	01183-06012	201
R-402-00710-12	189	01100-12045	28	01103-14040	251	01183-06012	202
R-402-00710-12	190	01100-12045	28A	01103-16065	242	01183-06012	203
R-402-65004-22	190	01100-12070	259	01103-16065	248	01183-06016	37
R-402-65004-37	189	01100-14025	241	01103-16065	256	01183-06016	38
R-402-65004-41	187	01100-14025	241	01106-12040	88	01183-06016	161
R-403-21988	187	01100-14025	247	01106-12040	88A	01183-06016	162
R-403-24323	189	01100-14025	255	01109-08020	26	01183-06016	252
R-403-24323	190	01100-14030	241	01109-12030	167	01183-06016	260
Z-8-94132-674-0	22	01100-14030	247	01110-30090	164	01183-06025	37
Z-8-94132-675-0	22	01100-14030	247	01110-30150	163	01183-06025	38
Z-8-94367-294-0	22	01100-14030	255	01110-30150	165	01183-08016	3
Z-8-94367-956-0	22	01100-14030	255	01110-30150	165	01183-08016	4
Z-8-94367-957-0	22	01100-14035	122	01110-30150	165	01183-08016	4A
01030-04014	64	01100-14035	247	01110-30150	166	01183-08016	5
01030-04020	69	01100-14035	255	01113-30230	166	01183-08016	5A
01030-05065	50	01100-16016	250	01113-30300	166	01183-08016	22
01033-05014	35	01100-16016	258	01120-08020	142	01183-08016	28
01033-05014	36	01100-16045	99	01120-08035	138	01183-08016	28A
01044-04014	64	01100-16055	256	01120-08035	138	01183-08016	29
01066-06008	230	01100-16065	157	01120-08035	138A	01183-08016	75
01066-08008	75	01100-16075	250	01120-08035	139	01183-08016	79
01066-08008	79	01100-16075	258	01120-08035	139	01183-08016	96
01066-08008	84	01100-20080	99	01120-08035	139A	01183-08016	98
01066-10012	218	01103-08016	75	01120-08035	139A	01183-08016	132
01066-10012	218	01103-08016	79	01120-08035	140	01183-08016	133
01100-05010	1	01103-08016	97	01120-08035	140A	01183-08016	134
01100-06010	46	01103-08020	76	01120-08035	141	01183-08016	134
01100-06010	48	01103-08020	80	01120-08035	141A	01183-08016	136

PARTS NUMBER INDEX

Part No.	Fig.No.	Part No.	Fig.No.	Part No.	Fig.No.	Part No.	Fig.No.
01183-08016	137	01184-10050	80	01185-08030	28A	01400-00008	25
01183-08016	144	01184-10055	74	01185-10030	186	01400-00008	28
01183-08016	144	01184-10055	80	01185-10030	189	01400-00008	28A
01183-08016	146	01184-10055	144	01186-06012	174	01400-00008	51
01183-08016	147	01184-10055	144	01186-06012	174	01400-00008	54
01183-08016	168	01184-10055	146	01186-08016	138A	01400-00008	55
01183-08016	168A	01184-10055	147	01186-08016	139A	01400-00008	56
01183-08016	173	01184-10060	260	01186-08016	139A	01400-00008	57
01183-08020	1	01184-10065	74	01186-08016	140A	01400-00008	58
01183-08020	213	01184-10065	80	01186-08016	141A	01400-00008	59
01183-08020	216	01184-12025	240	01186-08016	142	01400-00008	64
01183-08020	217	01184-12025	246	01186-08016	147	01400-00008	71
01183-08020	228	01184-12025	254	01186-08020	60	01400-00008	72
01183-08022	27	01184-12030	92	01186-08020	60A	01400-00008	74
01183-08022	28	01184-12030	93	01186-08025	68	01400-00008	78
01183-08022	28A	01184-12040	240	01186-10016	216	01400-00008	79
01183-08025	213	01184-12040	246	01186-10016	217	01400-00008	156
01183-08035	79	01184-12040	254	01186-10020	60	01400-00008	182
01183-08045	1	01184-12050	240	01186-10020	60A	01400-00008	182
01183-08045	228	01184-12050	246	01186-10020	60A	01400-00008	182A
01183-08050	1	01185-06012	26	01186-10020	173	01400-00008	183
01183-10025	60	01185-06016	35	01186-10020	260	01400-00008	183A
01184-10016	76	01185-06016	36	01186-10025	60A	01400-00008	184
01184-10020	145	01185-08016	8	01186-10030	101	01400-00008	184A
01184-10020	182	01185-08016	10	01186-10035	230	01400-00008	185
01184-10020	183	01185-08016	11	01186-12025	127	01400-00008	185
01184-10020	183	01185-08016	12	01186-12025	128	01400-00008	235
01184-10020	184	01185-08016	13	01186-12025	129	01400-00010	60
01184-10020	184	01185-08016	14	01186-12025	130	01400-00010	60
01184-10020	248	01185-08016	16	01186-12025	131	01400-00010	60
01184-10020	251	01185-08016	17	01186-12030	167	01400-00010	60A
01184-10020	260	01185-08016	18	01186-12035	127	01400-00010	74
01184-10025	68	01185-08016	19	01186-12035	128	01400-00010	76
01184-10025	83	01185-08016	20	01186-12035	170	01400-00010	78
01184-10025	86	01185-08016	26	01186-12045	27	01400-00010	80
01184-10025	144	01185-08016	27	01186-12045	28	01400-00010	80
01184-10025	144	01185-08016	28	01186-12045	28A	01400-00010	96
01184-10025	146	01185-08016	28	01186-12045	29	01400-00010	97
01184-10025	147	01185-08016	28A	01213-10025	75	01400-00010	98
01184-10030	74	01185-08016	28A	01213-10025	79	01400-00010	101
01184-10030	80	01185-08016	29	01214-08020	147	01400-00010	143
01184-10030	143	01185-08016	37	01218-10025	1	01400-00010	144
01184-10030	144	01185-08016	37	01400-00004	69	01400-00010	144
01184-10030	144	01185-08016	38	01400-00006	37	01400-00010	145
01184-10030	145	01185-08016	38	01400-00006	38	01400-00010	146
01184-10030	146	01185-08016	39	01400-00006	69	01400-00010	147
01184-10030	147	01185-08016	40	01400-00006	70	01400-00012	114
01184-10030	148	01185-08016	49	01400-00006	72	01400-00012	116
01184-10030	149	01185-08016	59	01400-00006	136	01400-00012	118
01184-10030	150	01185-08016	216	01400-00006	137	01400-00012	120
01184-10030	151	01185-08016	217	01400-00006	143	01400-00012	136
01184-10035	74	01185-08020	16	01400-00006	144	01400-00012	137
01184-10035	74	01185-08020	19	01400-00006	144	01400-00012	259
01184-10035	80	01185-08020	55	01400-00006	145	01400-00018	243
01184-10040	74	01185-08020	58	01400-00006	146	01400-00018	250
01184-10040	80	01185-08020	81	01400-00006	147	01400-00018	258
01184-10050	74	01185-08020	168	01400-00006	173	01400-00018	259
01184-10050	74	01185-08020	168A	01400-00008	1	01400-10016	102
01184-10050	80	01185-08020	172	01400-00008	23A	01400-10016	104
01184-10050	80	01185-08030	28	01400-00008	24	01400-10016	106

PARTS NUMBER INDEX

Part No.	Fig.No.	Part No.	Fig.No.	Part No.	Fig.No.	Part No.	Fig.No.
01400-10016	108	01412-00030	96	02000-00010	24	02010-00004	64
01400-10020	88	01412-00030	97	02000-00010	25	02010-00004	69
01400-10020	88A	01412-00030	98	02000-00010	25	02010-00005	1
01400-20008	23	01412-10016	95	02000-00010	25	02010-00006	39
01400-20008	23A	01412-10016	95	02000-00010	26	02010-00006	40
01400-20008	24	01412-10016	96	02000-00010	31	02010-00006	46
01400-20010	25	01412-10016	96	02000-00010	60A	02010-00006	48
01400-20010	31	01412-10016	98	02000-00010	77	02010-00006	69
01400-30008	31	01412-10016	98	02000-00010	96	02010-00006	136
01402-00008	135	01412-10016	121	02000-00010	97	02010-00006	137
01402-00008	138	01412-10016	121	02000-00010	98	02010-00006	173
01402-00008	138	01412-10016	123	02000-00010	101	02010-00006	205
01402-00008	138A	01412-10016	123	02000-00010	143	02010-00006	206
01402-00008	139	01412-10020	121	02000-00010	144	02010-00006	207
01402-00008	139	01412-10020	123	02000-00010	144	02010-00006	208
01402-00008	139A	01420-00006	39	02000-00010	145	02010-00006	209
01402-00008	139A	01420-00006	40	02000-00010	146	02010-00008	1
01402-00008	140	02000-00004	26	02000-00010	147	02010-00008	23
01402-00008	140A	02000-00004	69	02000-00010	168	02010-00008	23A
01402-00008	141	02000-00005	137	02000-00010	168A	02010-00008	23A
01402-00008	141A	02000-00005	200	02000-00010	185	02010-00008	24
01402-00008	142	02000-00005	201	02000-00010	185	02010-00008	24
01402-00008	143	02000-00005	202	02000-00010	187	02010-00008	25
01402-00008	143	02000-00005	203	02000-00010	188	02010-00008	28
01402-00008	147	02000-00006	46	02000-00010	190	02010-00008	28A
01402-00008	147	02000-00006	48	02000-00012	28	02010-00008	29
01402-00010	138	02000-00006	136	02000-00012	28A	02010-00008	64
01402-00010	143	02000-00006	136	02000-00012	90	02010-00008	74
01402-00010	144	02000-00006	137	02000-00016	136	02010-00008	78
01402-00010	144	02000-00006	137	02000-00016	137	02010-00008	147
01402-00010	146	02000-00006	145	02000-00016	144	02010-00008	156
01402-00010	147	02000-00006	173	02000-00016	144	02010-00008	182
01402-00010	185	02000-00008	1	02000-00016	145	02010-00008	182
01402-00010	185	02000-00008	23	02000-00016	146	02010-00008	182A
01402-00010	187	02000-00008	23A	02000-00016	147	02010-00008	183
01402-00010	188	02000-00008	24	02000-00016	250	02010-00008	183A
01402-00010	190	02000-00008	28	02000-00016	258	02010-00008	184
01402-00010	239	02000-00008	28	02000-00016	258	02010-00008	184A
01402-00010	245	02000-00008	28A	02000-00022	76	02010-00008	185
01402-00010	253	02000-00008	28A	02000-00024	75	02010-00008	185
01402-00012	96	02000-00008	29	02000-00027	79	02010-00008	235
01402-00012	98	02000-00008	97	02000-00030	96	02010-00010	25
01402-00014	90	02000-00008	143	02000-00030	97	02010-00010	31
01402-00014	91	02000-00008	144	02000-00030	98	02010-00010	96
01402-00022	95	02000-00008	144	02000-20010	167	02010-00010	97
01402-00022	95	02000-00008	146	02000-20010	174	02010-00010	98
01402-00022	121	02000-00008	147	02000-20010	243	02010-00010	144
01402-00022	123	02000-00008	168	02000-20010	243	02010-00010	144
01402-00024	121	02000-00008	168A	02000-20010	251	02010-00010	146
01402-00024	121	02000-00008	169	02000-20010	259	02010-00010	147
01402-00024	123	02000-00008	169A	02000-20010	259	02010-00010	187
01402-00024	123	02000-00008	170	02000-20016	250	02010-00010	188
01402-10010	92	02000-00008	171	02001-00008	31	02010-00010	190
01402-10010	93	02000-00008	171	02001-00012	167	02010-00012	28
01402-10018	121	02000-00008	172	02002-00010	138	02010-00012	28A
01402-10018	123	02000-00008	182	02002-00010	139	02010-00012	133
01407-00008	147	02000-00010	15	02002-00010	139	02010-00012	259
01407-00008	147	02000-00010	23	02002-00010	140	02010-00014	122
01407-00022	121	02000-00010	23A	02002-00010	141	02010-00014	241
01407-00022	123	02000-00010	24	02003-20010	81	02010-00014	241

Part No.	Fig.No.	Part No.	Fig.No.	Part No.	Fig.No.	Part No.	Fig.No.
02010-00014	247	02011-00016	248	02200-16010	201	03000-06306	84
02010-00014	247	02011-00016	256	02200-16010	202	03000-06306	84
02010-00014	255	02013-00008	26	02200-16010	203	03010-06904	94
02010-00014	255	02013-00008	31	02200-16015	136	03010-06904	94A
02010-00016	99	02013-00012	167	02200-16015	137	03042-06308	259
02010-00016	157	02100-00012	85	02200-32020	144	03071-30207	96
02010-00016	250	02100-00012	85A	02200-32020	144	03071-30207	97
02010-00016	250	02100-00020	94	02200-32020	146	03071-30207	98
02010-00016	256	02100-00020	94A	02200-32020	147	03071-30211	96
02010-00016	258	02100-00022	76	02200-32025	143	03071-30211	97
02010-00016	258	02100-00025	75	02200-32025	144	03071-30211	98
02010-00020	99	02100-00025	79	02200-32025	144	03071-30214	88
02010-00030	163	02100-00028	79	02200-32025	145	03071-30214	88A
02010-00030	164	02100-00030	77	02200-32025	146	03126-83201	96
02010-00030	165	02100-00030	83	02200-32025	147	03126-83201	97
02010-00030	165	02100-00040	77	02200-32032	95	03126-83201	98
02010-00030	165	02100-00040	84	02200-32032	95	03146-13201	96
02010-00030	166	02100-00040	243	02200-32032	96	03146-13201	96
02010-10006	96	02100-00040	250	02200-32032	96	03146-13201	97
02010-10006	97	02100-00040	258	02200-32032	98	03146-13201	98
02010-10006	97	02100-00040	259	02200-32032	98	03146-13201	98
02010-10006	97	02100-00045	240	02200-32032	121	03190-00006	250
02010-10006	98	02100-00045	246	02200-32032	121	03190-00006	251
02010-20010	243	02110-00018	244	02200-32032	123	03190-00006	251
02010-20010	243	02110-00018	252	02200-32032	123	03190-00006	258
02010-20010	251	02110-00018	260	02212-06016	82	03190-00013	76
02010-20010	259	02110-00030	85	02212-10020	88	03192-00012	88
02010-20010	259	02110-00030	85A	02212-10020	88A	03192-00012	88A
02011-00008	75	02110-00037	94	02212-10020	122	03192-10012	88
02011-00008	76	02110-00037	94A	02212-10025	85	03192-10012	88A
02011-00008	79	02110-00062	122	02212-10025	85A	03217-08501	96
02011-00008	80	02110-00090	259	02212-12020	76	03217-08501	97
02011-00008	81	02120-00050	77	02212-12020	81	03217-08501	98
02011-00008	85	02121-00058	84	02262-06015	136	03300-00160	76
02011-00008	85A	02121-00080	77	02262-06015	137	03300-00280	260
02011-00008	97	02200-02016	144	02262-06020	145	03310-00300	76
02011-00010	76	02200-02016	144	02262-06025	145	03310-00600	75
02011-00010	78	02200-02016	146	02262-08020	144	03310-00600	79
02011-00010	80	02200-02020	143	02262-08020	144	03310-00800	86
02011-00010	81	02200-02020	147	02262-08020	146	03320-00110	122
02011-00010	138	02200-03030	243	02262-08025	143	03320-00110	144
02011-00010	139	02200-03030	250	02262-08030	147	03320-00110	144
02011-00010	139	02200-03030	258	02262-10030	143	03320-00110	146
02011-00010	140	02200-03030	259	02262-10030	144	03320-00110	147
02011-00010	141	02200-04025	136	02262-10030	144	03320-00110	213
02011-00010	250	02200-04025	137	02262-10030	145	03320-00140	199
02011-00010	258	02200-04025	144	02262-10030	146	03320-00140	205
02011-00012	88	02200-04025	144	02262-10030	147	03320-00140	206
02011-00012	88A	02200-04025	145	02270-01014	244	03320-00140	207
02011-00012	114	02200-04025	146	02270-01014	252	03320-00140	208
02011-00012	116	02200-04025	147	02270-01014	260	03320-00140	209
02011-00012	118	02200-04040	121	02360-05019	76	03320-00140	244
02011-00012	120	02200-04040	123	02360-05019	79	03320-00140	244
02011-00014	243	02200-04040	164	02432-01008	220	03320-00140	252
02011-00014	251	02200-06055	96	02432-01008	254	03320-00140	252
02011-00016	102	02200-06055	97	03000-06207	77	03320-00140	252
02011-00016	104	02200-06055	98	03000-06208	77	03320-00140	260
02011-00016	106	02200-16010	136	03000-06213	87	03320-00140	260
02011-00016	108	02200-16010	137	03000-06306	77	03320-00140	260
02011-00016	242	02200-16010	200	03000-06306	83	03320-00180	186

PARTS NUMBER INDEX

Part No.	Fig.No.	Part No.	Fig.No.	Part No.	Fig.No.	Part No.	Fig.No.
03320-00180	187	04601-44323	260	04710-04130	260	04901-00190	98
03320-00180	188	04601-44331	260	04710-04135	244	04901-00191	96
03320-00180	189	04601-44367	260	04710-04140	210	04901-00191	97
03320-00180	189	04601-44410	260	04710-04140	212	04901-00191	98
03320-00180	189	04601-44453	260	04710-04145	244	04911-00016	1
03320-00180	190	04601-44485	260	04710-04145	244	04911-00016	228
03320-00180	190	04691-02065	205	04710-04145	244	04911-00018	244
03320-00180	190	04691-02065	206	04710-04145	244	04911-00018	244
03320-00180	190	04691-02065	207	04710-04145	260	04911-00018	244
03320-00180	199	04691-02065	208	04710-04145	260	04911-00018	260
03320-00180	199	04691-02065	209	04710-04150	244	04911-00018	260
03320-00180	205	04691-04048	205	04710-04150	260	04911-00018	260
03320-00180	206	04691-04048	205	04710-04160	244	04911-00020	210
03320-00180	207	04691-04048	206	04710-04160	244	04911-00020	211
03320-00180	208	04691-04048	206	04710-04160	260	04911-00020	212
03320-00180	209	04691-04048	207	04710-04165	211	04911-00021	205
03320-00180	244	04691-04048	207	04710-04165	244	04911-00021	206
03320-00180	251	04691-04048	208	04710-04165	260	04911-00021	207
03320-00180	252	04691-04048	208	04710-04170	244	04911-00021	208
03320-00180	260	04691-04048	209	04710-04170	260	04911-00021	209
03320-00180	260	04691-04048	209	04710-04175	244	04911-00021	210
03320-00180	260	04691-04108	205	04710-04185	244	04911-00021	211
03320-00240	252	04691-04108	206	04710-04185	260	04911-00021	212
03320-00240	260	04691-04108	207	04710-04190	244	04911-00021	216
03320-00280	244	04710-04005	160	04710-04190	244	04911-00021	217
03320-00280	252	04710-04030	205	04710-04190	260	04911-00021	244
03320-00290	186	04710-04030	206	04710-04195	260	04911-00021	244
03320-00290	187	04710-04030	207	04710-04200	244	04911-00021	244
03320-00290	188	04710-04030	208	04710-04200	244	04911-00021	260
03320-00290	189	04710-04030	209	04710-04210	244	04911-00021	260
03320-00340	251	04710-04040	216	04710-04210	244	04911-00021	260
03320-00340	259	04710-04040	217	04710-04210	244	04911-00022	61
03340-00140	186	04710-04050	216	04710-04210	260	04911-00022	62
03340-00140	189	04710-04050	217	04710-04210	260	04911-00022	63
03350-00450	121	04710-04060	216	04710-04215	244	04911-00022	228
03350-00450	123	04710-04060	244	04710-04215	260	04911-00022	232
03350-00850	250	04710-04070	244	04710-04225	260	04911-00024	1
03350-00850	258	04710-04080	260	04710-04230	244	04911-00032	216
04000-00300	216	04710-04085	244	04710-04230	260	04911-00032	217
04000-00300	217	04710-04095	244	04710-04240	244	04911-00040	12
04134-20404	205	04710-04095	244	04710-04245	244	04911-00040	14
04134-20404	206	04710-04095	260	04710-04255	244	04911-00040	205
04134-20404	207	04710-04102	205	04710-04255	260	04911-00040	206
04134-20404	208	04710-04102	206	04710-04265	244	04911-00040	207
04134-20404	209	04710-04102	207	04710-04270	244	04911-00040	208
04138-00303	62	04710-04102	208	04710-04275	260	04911-00040	209
04138-00303	63	04710-04102	209	04710-04280	244	04911-00044	10
04150-00404	260	04710-04105	260	04710-04290	260	04911-00044	11
04150-20202	144	04710-04110	244	04710-04310	244	04911-00044	12
04150-20202	144	04710-04120	244	04710-04335	244	04911-00044	13
04150-20202	146	04710-04120	260	04901-00100	75	04911-00044	14
04150-20202	147	04710-04121	205	04901-00100	96	04911-00044	205
04150-20404	188	04710-04121	206	04901-00100	98	04911-00044	206
04150-20404	189	04710-04121	207	04901-00100	218	04911-00044	207
04150-30404	199	04710-04121	208	04901-00100	242	04911-00044	208
04601-44200	260	04710-04121	209	04901-00100	248	04911-00044	209
04601-44224	260	04710-04125	244	04901-00100	256	04911-00046	205
04601-44249	260	04710-04125	244	04901-00160	75	04911-00046	206
04601-44279	260	04710-04125	244	04901-00190	96	04911-00046	207
04601-44299	260	04710-04125	260	04901-00190	97	04911-00046	208

Part No.	Fig.No.	Part No.	Fig.No.	Part No.	Fig.No.	Part No.	Fig.No.
04911-00046	209	04914-00019	217	06806-60009	118	09001-10061	243
04911-00050	7	04914-00019	252	06806-60009	118	09001-10063	243
04911-00055	7	06001-55015	110	06806-60009	119	09001-10063	243
04911-00055	8	06001-60009	116	06806-70012	106	09001-10063	259
04911-00055	8	06001-60009	117	06806-70012	106	09001-10065	243
04911-00060	6	06001-70012	104	06806-70012	107	09001-10065	250
04911-00060	7	06001-70012	105	06806-70012	113	09001-10065	258
04911-00060	8	06001-70012	112	06806-70012	113	09001-10065	259
04911-00060	8	06001-70012	112	06807-60009	118	09001-10067	243
04911-00060	21	06005-55015	110	06807-60009	118	09001-10069	243
04911-00065	6	06005-60009	116	06807-60009	118	09001-10069	243
04911-00065	7	06005-60009	117	06807-70012	106	09001-10069	243
04911-00065	8	06005-70012	104	06807-70012	106	09001-10069	250
04911-00070	8	06005-70012	105	06807-70012	106	09001-10069	259
04911-00075	8	06005-70012	112	06841-55015	111	09001-10071	243
04911-00090	9	06005-70012	112	06841-60009	118	09001-10071	258
04912-00000	228	06006-55015	110	06841-70012	106	09001-10071	259
04913-10100	35	06006-60009	114	06841-70012	113	09001-10073	250
04913-10100	36	06006-60009	115	06841-70012	113	09001-10075	243
04913-10100	228	06006-60009	116	06843-55015	111	09001-10077	250
04913-10200	35	06006-60009	117	06843-60009	118	09001-10077	259
04913-10200	36	06006-70012	102	06843-70012	106	09001-10079	243
04913-10200	37	06006-70012	103	06843-70012	113	09001-10079	258
04913-10200	69	06006-70012	104	06843-70012	113	09001-10081	250
04913-10200	228	06006-70012	105	06851-55015	111	09001-10083	243
04913-10200	232	06006-70012	112	06851-60009	118	09001-10083	258
04913-10300	228	06006-70012	112	06851-70012	106	09001-10083	259
04913-11100	35	06007-55015	110	06851-70012	113	09001-10087	243
04913-11100	36	06007-60009	116	06851-70012	113	09001-10089	250
04913-11100	50	06007-60009	117	09001-10035	250	09001-10091	243
04913-11120	51	06007-70012	104	09001-10037	258	09001-10091	259
04913-11120	52	06007-70012	105	09001-10039	250	09001-10095	259
04913-11120	53	06007-70012	112	09001-10041	250	09001-10097	250
04913-11120	54	06007-70012	112	09001-10041	258	09001-10101	243
04913-11120	54	06701-55015	110	09001-10043	243	09001-10109	243
04913-11120	54	06701-70012	102	09001-10045	250	09192-30044	242
04913-11200	35	06701-70012	103	09001-10045	250	09192-30044	248
04913-11200	36	06701-70012	104	09001-10045	258	09192-30044	256
04913-11200	61	06701-70012	105	09001-10047	243	09192-30044	256
04913-11200	62	06701-70012	112	09001-10047	250	10113-40171	77
04913-11200	63	06701-70012	112	09001-10049	243	110F7-10232	186
04913-11200	92	06702-60009	114	09001-10049	259	110F7-10271	186
04913-11200	93	06702-60009	115	09001-10051	243	110F7-12001	186
04913-11200	94	06702-60009	116	09001-10051	250	110F7-12001	188
04913-11200	94A	06702-60009	117	09001-10051	250	110G7-10231	188
04913-11200	144	06711-55015	110	09001-10051	258	11243-82081	84
04913-11200	144	06711-70012	102	09001-10053	243	11243-82091	84
04913-11200	145	06711-70012	103	09001-10053	243	11243-82161	84
04913-11200	146	06711-70012	104	09001-10053	258	11243-82181	84
04913-11200	148	06711-70012	105	09001-10053	259	11243-82211	84
04913-11380	133	06711-70012	112	09001-10055	243	114A3-10501	75
04913-11380	211	06711-70012	112	09001-10055	250	114A3-12012	75
04913-20380	214	06712-60009	114	09001-10057	243	114A3-12012	79
04913-20380	215	06712-60009	115	09001-10057	250	114L3-12022	79
04913-21380	244	06712-60009	116	09001-10057	258	114L3-12031	79
04913-21380	260	06712-60009	117	09001-10057	259	115G3-82111	83
04914-00016	244	06731-00120	110	09001-10059	243	115G3-82241	83
04914-00016	260	06731-00120	112	09001-10059	250	115G3-82251	83
04914-00019	160	06804-70012	109	09001-10059	250	115G3-82331	84
04914-00019	216	06806-55015	111	09001-10059	258	115G3-82341	84

PARTS NUMBER INDEX

Part No.	Fig.No.	Part No.	Fig.No.	Part No.	Fig.No.	Part No.	Fig.No.
115G3-82351	84	124T3-43001	77	134A3-48911	75	136G2-50002	80
115G3-82361	84	124T3-43041	23A	134A3-48911	76	136S2-50001	78
115G3-82401	84	124T3-43041	24	134A3-48911	77	13683-82022	81
115G3-82411	84	124T3-43041	25	134A3-48911	86	137B2-50001	80
115G3-82451	83	124U3-82081	83	134A3-52001	87	137B2-50002	80
115G3-82471	77	124U3-82091	83	134A3-52041	87	137B3-80201	81
115G3-82471	83	124U3-82521	83	134A3-52051	87	137B3-80211	81
115G3-82491	85	131A3-10201	75	134A3-52061	87	138A2-50001	74
115G3-82491	85A	131A3-42021	77	134A3-59801	87	138A2-50041	74
115G3-82512	85	131M2-52001	81	134B3-80281	83	138G2-50001	80
115G3-82512	85A	131N3-12011	79	134B3-82001	81	138G2-50002	80
115G3-82522	85	131N3-12031	79	134B3-82011	81	139A3-42011	77
115G3-82522	85A	131N3-12041	79	134B3-82021	81	139B3-80201	85A
115G3-82641	77	131N3-12101	79	134B3-82031	81	139B3-82111	85A
115G3-82641	83	131N3-12151	79	134B3-82041	81	139B3-82121	85A
115G3-82651	83	132G3-80201	84	134B3-82051	81	139B3-82131	85A
115G3-82671	83	132N7-10301	190	134B3-82091	82	139B3-82141	85A
116H3-82101	81	134A3-10211	75	134B3-82101	81	139B3-82151	85A
116H3-82101	83	134A3-12001	75	134B3-82141	83	139B3-82161	85A
116H3-82201	83	134A3-12011	75	134B3-82281	81	139B3-89801	85A
116H3-82201	85	134A3-12021	75	134B3-82291	81	139B3-89811	85A
116H3-82201	85A	134A3-12021	79	134B3-82301	81	14354-12211	92
116W7-10301	189	134A3-12031	75	134B3-82311	81	14354-12211	93
117M7-10401	187	134A3-12051	76	134B3-82321	81	14354-12221	92
120S3-10201	75	134A3-22001	86	134B3-82361	84	14354-12221	93
120S3-22011	86	134A3-22011	86	134B3-82371	84	14354-12251	92
120S3-42011	77	134A3-22021	86	134B3-82381	83	14354-12251	93
120T3-82001	83	134A3-22031	86	134B3-82401	84	14354-12261	92
12003-12021	75	134A3-22041	86	134B3-89821	81	14354-12261	93
12003-42052	76	134A3-40201	76	134B3-89821	83	14354-12271	90
12003-42061	76	134A3-40221	77	134B3-89861	82	14354-12271	91
12003-42281	77	134A3-42021	76	134G3-80201	84	14354-12321	92
12003-42291	77	134A3-42031	76	134G3-80251	84	14354-12321	93
12003-42311	77	134A3-42051	77	134G3-80301	81	14453-52071	87
12003-42311	83	134A3-42071	77	134G3-80401	82	14453-52081	87
12003-42311	86	134A3-42081	77	134G3-82001	82	15533-10301	75
12003-42321	77	134A3-42101	77	134G3-82101	84	15573-42011	77
12003-42321	83	134A3-42111	77	134G3-82111	84	15573-42151	76
12003-42321	86	134A3-42121	77	134G3-82121	84	15573-42151	88
12003-42331	77	134A3-42131	77	134G3-82131	84	15573-42151	88A
12003-42331	83	134A3-42141	77	134G3-82141	84	15583-82141	82
12003-42331	86	134A3-42151	77	134G3-89811	84	15583-82161	82
12003-42421	76	134A3-42171	77	134G3-89831	84	15583-82172	82
12003-42451	76	134A3-42181	77	134G3-89851	82	15583-82181	82
12003-42461	76	134A3-42191	77	134H3-10201	79	15583-82211	82
12003-43031	77	134A3-42201	77	134H3-10211	79	15583-82241	82
12003-43031	83	134A3-42211	77	134H3-12001	79	15583-82441	83
12163-82221	83	134A3-42221	76	134H3-12011	79	15583-82451	83
12163-82232	83	134A3-42221	83	134H3-12022	79	15583-82461	83
12163-82541	76	134A3-42251	77	135L3-82001	85	15583-82521	81
12163-82541	79	134A3-42261	77	135L3-82001	85A	15583-82541	81
12163-82541	81	134A3-42271	77	135L3-82002	85A	15583-82571	85
12163-82541	83	134A3-42301	77	136A2-50001	74	15583-82571	85
12163-82561	82	134A3-42321	77	136A2-50041	74	15583-82571	85A
12163-82561	82	134A3-42331	77	136B2-50001	80	15604-10202	94
12163-82621	81	134A3-42401	76	136B2-50002	80	15793-82321	85
124G3-12011	75	134A3-42411	76	136F2-50001	74	15793-82321	85A
124G3-52011	87	134A3-42421	76	136F2-50041	74	15793-82341	85
124T3-42651	83	134A3-42431	76	136F3-42001	77	15793-82341	85A
124T3-42661	83	134A3-42451	76	136G2-50001	80	15913-42511	77

PARTS NUMBER INDEX

Part No.	Fig.No.	Part No.	Fig.No.	Part No.	Fig.No.	Part No.	Fig.No.
15943-82651	85	210F2-42231	50	214A0-53901	251	214A2-44501	50
15943-82651	85A	210F8-42631	251	214A0-59821	251	214A2-44511	50
15943-82661	85	210F8-42631	251	214A0-62151	252	214A2-52002	74
15943-82661	85A	211L2-10011	2	214A0-82651	250	214A2-52002	78
15943-82701	79	21152-22121	22	214A0-82651	258	214A2-52012	74
15943-82731	85	21152-22151	22	214A0-82681	250	214A2-52012	78
15943-82741	85	21152-22151	22	214A0-82681	258	214A3-00301	88
15943-82751	85	21152-42013	38	214A0-82831	250	214A3-00301	88A
16113-52121	87	21152-42021	38	214A0-82831	258	214A3-02001	89
16113-52141	87	21152-42091	37	214A0-93001	254	214A3-02011	88
16402-54331	66	21159-12501	221	214A0-93011	254	214A3-02011	88A
16402-54331	70	212T2-42311	39	214A0-93031	254	214A3-02021	88
16402-54331	71	21232-32551	23	214A0-93041	254	214A4-12161	90
16402-54331	72	21232-32551	23A	214A0-93101	254	214A4-12161	91
19502-52551	79	21232-32551	24	214A0-93111	254	214A4-32041	96
20224-30061	96	21232-32551	24	214A0-93131	254	214A4-32041	97
20224-30061	98	21232-32551	25	214A0-93141	254	214A4-32041	98
205A2-63311	69	21232-32551	25	214A1-02111	1	214A4-32051	96
20712-40275	37	21232-32551	26	214A1-02111	2	214A4-32051	97
20712-40275	38	21237-52051	157	214A1-02121	1	214A4-32051	98
20801-02141	22	21237-52051	157	214A1-02121	2	214A4-32131	96
20802-51301	214	21237-52062	157	214A2-12001	15	214A4-32131	98
20802-51301	215	21237-52062	157	214A2-12011	15	214A4-32161	96
209K2-40501	36	21239-12501	221	214A2-12021	15	214A4-32161	97
209K2-43001	35	213L2-52001	78	214A2-12111	15	214A4-32161	98
209K2-43001	36	213T1-02011	3	214A2-12121	15	214A4-32201	99
209K4-10601	91	213T1-02011	4	214A2-12141	15	214A4-32211	99
209K4-10801	90	213T1-02011	4A	214A2-12201	15	214A4-50111	121
209K4-10801	91	213T1-02011	5	214A2-13001	15	214A4-50111	123
209K4-12301	91	213T1-02011	5A	214A2-13011	15	214A4-52021	121
209K4-12501	90	213T1-02021	3	214A2-22071	22	214A4-52021	123
209K4-12501	91	213T1-02021	4	214A2-40203	50	214A4-52031	121
209K4-12511	90	213T1-02021	4A	214A2-42331	10	214A4-52031	123
209K4-12511	91	213T1-02021	5	214A2-42331	43	214A4-52041	121
209K4-12521	90	213T1-02021	5A	214A2-42331	44	214A4-52041	123
209K4-12521	91	214A0-51701	251	214A2-42331	45	214A4-52051	121
209K4-12531	90	214A0-51711	251	214A2-42331	46	214A4-52051	123
209K4-12531	91	214A0-51721	251	214A2-42331	47	214A4-59802	121
209K4-12541	90	214A0-51731	251	214A2-42331	48	214A4-59802	123
209K4-12541	91	214A0-51741	251	214A2-42331	144	214A5-22001	136
209K4-12561	90	214A0-51751	251	214A2-42331	144	214A5-22001	137
209K4-12561	91	214A0-51761	251	214A2-42331	146	214A5-22051	136
209P4-12111	90	214A0-51771	251	214A2-42331	147	214A5-22051	137
209P4-12111	91	214A0-51781	251	214A2-42371	67	214A5-32101	143
209P6-40301	168	214A0-51791	251	214A2-42611	1	214A5-32312	143
209P6-40401	168	214A0-51801	251	214A2-42611	15	214A5-33012	143
209P6-40401	168A	214A0-51811	251	214A2-42611	22	214A5-33031	143
209P6-42831	16	214A0-51821	251	214A2-42611	37	214A5-33041	143
209P6-42831	18	214A0-51831	251	214A2-42611	38	214A5-33052	143
209P6-42831	19	214A0-51841	251	214A2-42611	55	214A5-33062	143
209P6-42841	168	214A0-51851	251	214A2-42611	56	214A5-52121	156
209P6-42841	168A	214A0-51861	251	214A2-42611	57	214A5-52131	156
209P7-42161	174	214A0-51871	251	214A2-42611	58	214A5-52241	156
209P7-62531	215	214A0-51881	251	214A2-42611	70	214A5-53012	221
210F2-42011	50	214A0-53681	251	214A2-42611	71	214A6-12601	99
210F2-42021	50	214A0-53681	251	214A2-42611	72	214A6-12611	99
210F2-42031	50	214A0-53721	251	214A2-42611	73	214A6-42121	169
210F2-42201	50	214A0-53901	251	214A2-42621	37	214A6-42121	169A
210F2-42211	50	214A0-53901	251	214A2-42621	38	214A6-42121	170
210F2-42221	50	214A0-53901	251	214A2-44001	49	214A6-42252	167

Part No.	Fig.No.	Part No.	Fig.No.	Part No.	Fig.No.	Part No.	Fig.No.
214A6-42252	175	214A8-10512	253	214A8-12021	253	216G1-02311	5
214A6-42252	176	214A8-10522	239	214A8-12031	239	216G1-02451	3
214A6-42252	176	214A8-10522	245	214A8-12031	245	216G1-02451	4A
214A6-42252	176	214A8-10522	253	214A8-12031	253	216G1-02451	5A
214A6-42252	176	214A8-10532	239	214A8-42661	243	216G1-02461	3
214A6-42252	176	214A8-10532	245	214A8-42661	251	216G1-02461	4A
214A6-42252	176	214A8-10532	253	214A8-42661	259	216G1-02461	5A
214A6-42252	176	214A8-10542	239	214A8-42721	259	216G1-02471	3
214A6-42252	177	214A8-10542	245	214A8-43081	260	216G1-02471	4A
214A6-42252	178	214A8-10542	253	214A8-44151	244	216G1-02471	5A
214A6-42361	179	214A8-10552	239	214A8-44151	252	216G1-02481	3
214A6-42361	179	214A8-10552	245	214A8-44151	260	216G1-02481	4A
214A6-42361	180	214A8-10552	253	214A8-46001	259	216G1-02481	5A
214A6-42771	35	214A8-10563	239	214A8-52051	122	216G1-02491	3
214A6-42771	36	214A8-10563	245	214A8-52221	122	216G1-02491	4A
214A6-42771	178	214A8-10563	253	214A9-20101	227	216G1-02491	5A
214A6-42771	179	214A8-10582	239	214A9-20101	227	216G1-02501	3
214A6-42771	179	214A8-10582	245	214L5-32101	144	216G1-02501	4A
214A6-42771	180	214A8-10582	253	214L5-32101	144	216G1-02501	5A
214A6-42911	174	214A8-10592	239	214L5-32101	146	216G2-22051	21
214A7-42071	136	214A8-10592	245	214L5-32101	147	216G2-22202	158
214A7-42071	137	214A8-10592	253	214L7-62261	188	216G2-22202	159
214A7-42071	200	214A8-10602	239	214T2-42311	37	216G2-22211	21
214A7-42071	200	214A8-10602	245	214T2-42311	38	216G2-40301	32
214A7-42071	201	214A8-10602	253	214T2-42321	37	216G2-40602	50
214A7-42071	201	214A8-10612	239	214T2-42321	38	216G2-40602	55
214A7-42071	201	214A8-10612	245	214T6-42091	172	216G2-40602	56
214A7-42071	202	214A8-10612	253	215B4-52122	122	216G2-40602	57
214A7-42071	202	214A8-10622	239	215B8-52022	218	216G2-40701	50
214A7-42071	202	214A8-10622	245	215E4-12231	91	216G2-40711	50
214A7-42071	202	214A8-10622	253	215E4-32341	96	216G2-40721	50
214A7-42071	203	214A8-10632	239	215E4-32341	97	216G2-40731	50
214A7-42071	203	214A8-10632	245	215E4-32341	98	216G2-42071	39
214A7-42071	203	214A8-10632	253	215E4-39801	96	216G2-42131	35
214A7-42071	203	214A8-10642	239	215E4-39801	97	216G2-42131	36
214A7-42071	203	214A8-10642	245	215E4-39801	98	216G2-42311	37
214A7-42171	200	214A8-10642	253	215E4-52231	97	216G2-42311	38
214A7-42171	201	214A8-10653	239	215E4-52301	97	216G2-42321	37
214A7-42171	202	214A8-10653	245	215E7-62091	211	216G2-43111	39
214A7-42171	203	214A8-10653	253	215E8-42171	243	216G2-43111	40
214A7-42181	204	214A8-10663	239	215E8-42171	243	216G2-43151	39
214A7-42181	204	214A8-10663	245	215E8-42171	251	216G2-43161	32
214A7-42181	204	214A8-10663	253	215E8-42171	259	216G2-43161	33
214A7-42181	204	214A8-10673	239	215E8-42171	259	216G2-43161	34
214A7-42191	204	214A8-10673	245	215E8-42181	243	216G2-43201	32
214A7-42201	204	214A8-10673	253	215E8-42181	243	216G2-43201	33
214A7-52081	158	214A8-10683	239	215E8-42181	251	216G2-43201	34
214A7-52081	159	214A8-10683	245	215E8-42181	259	216G2-43211	32
214A7-62131	210	214A8-10683	253	215E8-42181	259	216G2-43221	33
214A7-62131	212	214A8-11001	239	216G1-02021	7	216G2-43221	34
214A8-02201	242	214A8-11001	245	216G1-02031	7	216G2-43231	32
214A8-02201	248	214A8-11001	253	216G1-02051	4	216G2-43231	33
214A8-02201	256	214A8-12001	239	216G1-02051	5	216G2-43231	34
214A8-10512	239	214A8-12001	245	216G1-02071	4	216G2-43241	32
214A8-10512	239	214A8-12001	253	216G1-02071	5	216G2-43241	33
214A8-10512	245	214A8-12011	239	216G1-02111	1	216G2-43241	34
214A8-10512	245	214A8-12011	245	216G1-02111	2	216G2-43251	32
214A8-10512	245	214A8-12011	253	216G1-02301	4	216G2-43251	33
214A8-10512	253	214A8-12021	239	216G1-02301	5	216G2-43251	34
214A8-10512	253	214A8-12021	245	216G1-02311	4	216G2-43261	32

Part No.	Fig.No.	Part No.	Fig.No.	Part No.	Fig.No.	Part No.	Fig.No.
216G2-43261	33	216G2-43622	55	216G6-42031	145	216G7-40022	200
216G2-43261	34	216G2-43622	56	216G6-42031	146	216G7-40022	201
216G2-43271	32	216G2-43622	57	216G6-42451	168	216G7-40022	202
216G2-43271	33	216G2-43631	50	216G6-42451	168A	216G7-40022	203
216G2-43281	32	216G2-43631	55	216G6-42481	168	216G7-40032	201
216G2-43281	33	216G2-43631	56	216G6-42481	168A	216G7-40032	202
216G2-43281	34	216G2-43631	57	216G6-42541	125	216G7-40032	203
216G2-43291	32	216G2-43651	37	216G6-42541	126	216G7-40042	202
216G2-43291	33	216G2-43651	38	216G6-42541	168	216G7-40042	203
216G2-43291	34	216G2-43711	37	216G6-42541	168A	216G7-42001	200
216G2-43301	32	216G2-43711	38	216G6-42911	173	216G7-42011	201
216G2-43301	33	216G4-12091	35	216G6-42931	173	216G7-42011	202
216G2-43301	34	216G4-12091	36	216G6-43231	156	216G7-42161	137
216G2-43401	37	216G4-12101	90	216G6-43241	143	216G7-52051	158
216G2-43401	38	216G4-12101	91	216G6-43241	144	216G7-52051	159
216G2-43411	37	216G4-12111	90	216G6-43241	144	216G7-52121	216
216G2-43411	38	216G4-12111	91	216G6-43241	145	216G7-52121	217
216G2-43421	37	216G4-12151	91	216G6-43241	146	216G7-52201	160
216G2-43421	38	216G4-12161	91	216G6-43241	147	216G7-52201	216
216G2-43502	50	216G4-12171	91	216G6-43561	167	216G7-52201	217
216G2-43502	55	216G4-12251	94	216G6-43601	173	216G8-12101	239
216G2-43502	56	216G4-12251	94A	216G6-52231	174	216G8-12101	245
216G2-43502	57	216G4-12251	249	216G6-52271	174	216G8-12101	253
216G2-43531	50	216G4-12251	249	216G6-52291	168	216G8-12921	245
216G2-43531	55	216G4-12251	257	216G6-52291	168A	216G8-12921	253
216G2-43531	56	216G4-12601	90	216G6-52291	174	216G8-33351	256
216G2-43531	57	216G4-12601	91	216G6-82501	183	216G8-33361	242
216G2-43542	50	216G4-12611	90	216G6-82501	184	216G8-33361	248
216G2-43542	55	216G4-12611	91	216G6-82601	183	216G8-33361	256
216G2-43542	56	216G4-12621	90	216G6-82601	184	216G8-33361	256
216G2-43542	57	216G4-12621	91	216G6-82611	183	216G8-33371	242
216G2-43551	50	216G4-12631	90	216G6-82611	184	216G8-33371	248
216G2-43551	55	216G4-12631	91	216G6-82621	183	216G8-33371	256
216G2-43551	56	216G4-12641	90	216G6-82621	184	216G8-33371	256
216G2-43551	57	216G4-12641	91	216G7-32001	191	216G8-33401	242
216G2-43562	50	216G4-12661	90	216G7-32001	192	216G8-33401	248
216G2-43562	55	216G4-12661	91	216G7-32001	193	216G8-33401	256
216G2-43562	56	216G4-12681	90	216G7-32001	194	216G8-52201	218
216G2-43562	57	216G4-12681	91	216G7-32011	143	216G8-52301	218
216G2-43571	50	216G4-12711	90	216G7-32011	144	216G8-52301	242
216G2-43571	55	216G4-12711	91	216G7-32011	144	216G8-52301	248
216G2-43571	56	216G4-12741	90	216G7-32011	145	216G8-52301	256
216G2-43571	57	216G4-12741	91	216G7-32011	146	216G8-53001	219
216G2-43582	50	216G4-12751	90	216G7-32011	147	216G8-53011	219
216G2-43582	55	216G4-12751	91	216G7-32011	191	216G8-53051	219
216G2-43582	56	216G4-12761	90	216G7-32011	192	216G9-12013	220
216G2-43582	57	216G4-12761	91	216G7-32011	193	216G9-12023	220
216G2-43592	50	216G5-22081	145	216G7-32011	194	216G9-12033	220
216G2-43592	55	216G5-22101	137	216G7-32021	191	216G9-12052	221
216G2-43592	56	216G5-32201	143	216G7-32021	192	216G9-12062	221
216G2-43592	57	216G5-32311	143	216G7-32021	193	216G9-12071	221
216G2-43602	50	216G5-32321	143	216G7-32021	194	216G9-12071	222
216G2-43602	55	216G5-32331	143	216G7-32041	191	216G9-12071	223
216G2-43602	56	216G5-32341	143	216G7-32041	192	216G9-12071	224
216G2-43602	57	216G5-42011	143	216G7-32041	193	216G9-12071	225
216G2-43611	50	216G6-32101	163	216G7-32041	194	216G9-12071	226
216G2-43611	55	216G6-32101	165	216G7-40012	200	216G9-12131	221
216G2-43611	56	216G6-42031	143	216G7-40012	201	216G9-12131	222
216G2-43611	57	216G6-42031	144	216G7-40012	202	216G9-12131	223
216G2-43622	50	216G6-42031	144	216G7-40012	203	216G9-12131	224

PARTS NUMBER INDEX

Part No.	Fig.No.	Part No.	Fig.No.	Part No.	Fig.No.	Part No.	Fig.No.
216G9-12131	225	218G6-42302	173	22199-12401	75	222A6-42451	169A
216G9-12131	226	218G6-42451	168	22199-12401	96	222A6-42451	170
216G9-32001	175	218G6-42451	168A	22199-12401	97	222A6-42451	171
216H3-92171	168	218G6-42471	168	22199-12401	98	222A6-42451	171
216H3-92171	168A	218G6-42471	168A	22199-12401	218	222A6-42451	172
216H3-92281	200	218G7-62111	205	22199-12401	218	222A6-42461	169
216H3-92281	201	218H1-00101	1	22199-22251	227	222A6-42461	169A
216H3-92281	202	218H5-40521	145	22199-22251	227	222A6-42461	170
216H3-92281	203	218H5-42521	145	222A2-10211	10	222A6-42461	171
216H3-92291	148	218M2-12301	10	222A2-10211	11	222A6-42461	171
216H3-92291	149	218M5-10401	125	222A2-10211	12	222A6-42461	172
216H3-92291	149	218M5-12501	125	222A2-10211	13	222A9-32011	135
216H3-92291	150	218M5-12501	126	222A2-10211	14	222A9-32011	135
216H3-92291	151	219G7-62001	207	222A2-22061	161	22208-40031	243
216H5-42141	168	219M1-02101	4	222A2-22061	162	22208-40031	250
216H5-42141	168A	219M1-02101	5	222A2-22071	161	22208-40031	258
216H7-82001	217	219M2-12301	11	222A2-22071	162	22214-30321	96
216M7-62101	186	219M2-12301	12	222A2-42031	32	22214-30321	97
217G2-32001	23A	219M2-12301	13	222A2-42031	33	22214-30321	98
217G2-32001	24	219M2-12301	14	222A2-42031	34	22216-30051	164
217G2-32001	25	219M7-62011	206	222A2-42031	35	22218-40191	243
217G2-40301	33	219S1-02001	4	222A2-42031	36	22218-40191	250
217G2-42021	39	219S1-02001	5	222A2-42331	32	22218-40191	258
217G2-42021	40	219S1-02001	5	222A2-42331	32	22218-40191	259
217G2-42051	39	220F1-00202	2	222A2-42331	33	22218-42111	243
217G2-42151	39	220F2-22001	22	222A2-42331	33	22218-42111	250
217G2-42151	40	220U1-02001	7	222A2-42331	34	22218-42111	258
217G2-42301	37	22018-30064	248	222A2-42331	34	22218-42111	259
217G2-42301	38	22018-30065	242	222A2-42331	34	22252-32241	23
217M1-02011	8	22018-30065	248	222A2-42341	32	22252-32241	23A
217M1-02031	8	22018-30065	256	222A2-42341	32	22252-32241	24
217M1-02402	8	22132-40041	51	222A2-42341	33	22252-32241	24
217M2-12221	12	22132-40041	51A	222A2-42341	33	22252-32241	25
217M2-12221	14	22132-40041	52	222A2-42341	34	22252-32241	25
217W2-10001	216	22132-40041	53	222A2-42341	34	22252-32241	26
217W2-10001	217	22132-40041	54	222A2-42361	32	22252-32241	31
218G1-00101	1	22132-40041	54	222A2-42361	33	22252-32251	15
218G1-02101	6	22132-40041	54	222A2-42361	34	22252-32251	23
218G1-02301	1	22132-40202	51	222A2-42401	32	22252-32251	23A
218G1-02351	1	22132-40202	51A	222A2-42401	32	22252-32251	24
218G2-22001	21	22132-40202	52	222A2-42401	32	22252-32251	24
218G2-22051	21	22132-40202	53	222A2-42401	33	22252-32251	25
218G2-42001	37	22132-40202	54	222A2-42401	33	22252-32251	25
218G2-42001	38	22132-40202	54	222A2-42401	33	22252-32251	26
218G2-42101	39	22132-40202	54	222A2-42401	34	22252-32251	143
218G5-10111	129	22192-22091	22	222A2-42401	34	22252-32251	144
218G5-10111	129	22192-22091	22	222A2-42401	34	22252-32251	144
218G5-10121	129	22192-22091	22	222A2-42511	51	22252-32251	145
218G5-10121	129	22192-42411	51	222A2-42511	51A	22252-32251	146
218G5-10121	129	22192-42411	51A	222A2-42511	52	22252-32251	147
218G5-42011	148	22192-42411	52	222A2-42511	53	22256-42001	17
218G5-42011	149	22192-42411	53	222A2-42511	54	22256-42001	20
218G5-42011	150	22192-42411	54	222A2-42511	54	22256-42001	51
218G5-42011	151	22192-42411	54	222A2-42511	54	22256-42001	51A
218G5-42021	149	22192-42411	54	222A3-70203	89	22256-42001	52
218G5-42021	150	22193-03001	88	222A3-70213	89	22256-42001	53
218G5-42021	151	22193-03001	88A	222A3-72011	89	22256-42001	54
218G6-40521	168	22197-52091	79	222A3-72021	89	22256-42001	54
218G6-40521	168A	22197-60231	94	222A5-52111	156	22256-42001	54
218G6-42301	173	22197-60231	94A	222A6-42451	169	224G2-32011	25

PARTS NUMBER INDEX

Part No.	Fig.No.	Part No.	Fig.No.	Part No.	Fig.No.	Part No.	Fig.No.
224G2-32011	31	225R9-12052	222	22679-45791	258	22717-40061	201
224G5-42061	143	225R9-12071	222	22679-45811	250	22717-40061	202
224G5-42061	144	225R9-12081	222	22679-45831	243	22717-40061	203
224G5-42061	144	225R9-12091	222	22679-45831	259	22717-40081	243
224G5-42061	145	225R9-12101	166	22679-45871	258	22777-60301	199
224G5-42061	146	225R9-12112	222	22679-45891	243	228F1-02211	4
224G5-42061	147	225R9-12142	220	22679-45891	250	228F1-02211	5
224T8-53011	219	225S9-12001	220	22679-45891	250	228F2-42131	37
224W4-30341	121	225S9-12011	220	22679-45891	259	228U7-62201	214
224W4-30341	123	22517-40051	200	22679-45911	243	228U7-62211	214
224W4-52071	6	22517-40051	201	22679-45911	258	228U7-62221	214
224W5-30202	144	22517-40051	202	22679-45951	250	228U7-62221	215
224W5-30202	144	22517-40051	203	22679-45971	243	22854-40201	109
224W5-30202	146	22517-40051	243	22679-45971	259	229F0-51201	251
224W5-30202	147	22548-34031	240	22679-45991	250	229F0-51211	251
224W5-30202	155	22548-34031	246	22679-45991	250	229F0-51221	251
224W5-30202	155	22548-34031	254	22679-45991	258	229F0-51231	251
224W5-32401	155	22548-34051	240	22679-45991	258	229F0-51241	251
224W5-32401	155	22548-34051	246	22679-46011	250	229F0-51251	251
224W5-32421	155	22548-34051	254	22679-46031	243	229F0-51261	251
224W5-32421	155	22548-34061	240	22679-46031	259	229F0-51271	251
224W5-32441	155	22548-34061	246	22679-46051	243	229F0-51281	251
224W5-32441	155	22548-34061	254	22679-46091	243	229F0-51291	251
224W5-32451	155	22580-53321	251	22679-46091	258	229F0-51301	251
224W5-32451	155	22580-53321	251	22679-46091	259	229F0-51311	251
224W5-32461	155	226B1-02101	1	22679-46111	250	229F0-51321	251
224W5-32461	155	22655-42591	144	22679-46151	243	229F0-51331	251
224W5-32471	155	22655-42591	144	22679-46151	243	229F0-51341	251
224W5-32471	155	22655-42591	145	22679-46151	259	229F0-51351	251
224W5-32481	155	22655-42591	146	22679-46171	243	229F0-51361	251
224W5-32481	155	22655-42591	147	22679-46171	250	229F0-51371	251
224W5-32491	155	22672-42501	55	22679-46171	259	229F0-51381	251
224W5-32491	155	22672-42501	56	22679-46211	258	229F0-82101	250
224W5-32501	155	22672-42501	57	22679-46231	250	229F0-82101	258
224W5-32501	155	22673-02031	88	22679-46251	243	229F0-91001	252
224W5-32511	155	22673-72031	89	22679-46271	259	229F0-91001	260
224W5-32511	155	22673-72041	89	22679-46311	250	229F2-22071	161
224W5-32521	155	22673-72111	89	22679-46331	243	229F2-22071	162
224W5-32521	155	22673-72121	89	22679-46331	258	229F2-22151	158
224W5-32551	155	22673-72131	89	22679-46371	250	229F2-22151	159
224W5-32551	155	22673-72141	89	22679-46391	243	229F2-22161	158
224W5-42401	155	22673-72161	89	22679-46391	259	229F2-22161	159
224W5-42401	155	22673-72252	89	22679-46411	258	229F2-22171	161
224W5-42431	155	22673-72261	89	22679-46451	243	229F2-22171	162
224W5-42431	155	22673-72321	89	22679-46511	243	229F2-42141	127
224W7-60311	144	22673-72391	89	22679-46511	259	229F2-42141	127
224W7-60311	144	22673-72411	89	22679-46531	250	229F2-42141	131
224W7-60311	146	22673-79801	89	22679-46591	259	229F2-42141	172
224W7-60311	147	22679-12102	238	22679-46651	250	229F2-42161	73
224W7-62701	122	22679-43831	251	22679-46671	243	229F2-42421	32
22438-42641	250	22679-43831	259	22679-46811	243	229F2-42421	32
22438-42641	258	22679-45611	250	22679-47301	55	229F2-42421	33
225A7-62021	186	22679-45651	258	22679-47301	56	229F2-42421	33
225A7-62021	187	22679-45671	250	22679-47301	57	229F2-42421	34
225R2-42001	39	22679-45711	243	22679-47301	58	229F2-42421	34
225R6-32001	166	22679-45711	250	22679-47301	71	229F2-42431	32
225R9-12001	222	22679-45711	258	22679-47301	72	229F2-42431	33
225R9-12011	220	22679-45771	243	22679-47301	130	229F2-42431	34
225R9-12021	220	22679-45771	250	22717-40061	137	229F6-42201	35
225R9-12031	222	22679-45791	250	22717-40061	200	229F6-42201	36

Part No.	Fig.No.	Part No.	Fig.No.	Part No.	Fig.No.	Part No.	Fig.No.
229F6-42201	64	231A0-40252	248	232A0-70441	256	234A0-50181	251
229F6-42201	176	231A0-40262	248	232A0-70451	256	234A0-50201	251
229F6-42201	176	231A0-40272	248	232A0-70461	256	234A0-50211	251
229F6-42201	176	231A0-40282	248	232A0-70471	256	234A0-50221	251
229F6-42201	176	231A0-40292	248	232A0-70481	256	234A0-50231	251
229F6-42201	176	231A0-40302	248	232A0-70491	256	234A0-50241	251
229F6-42201	176	231A0-40312	248	232A0-70501	256	234A0-50251	251
229F6-42201	176	231A0-40322	248	232A0-92141	260	234A0-50261	251
229F6-42201	176	231A0-40332	248	232A1-02001	8	234A0-50271	251
229F6-42201	179	231A0-40342	248	232A8-42201	243	234A0-50281	251
229F6-42201	179	231A0-40352	248	232A8-42201	243	234A0-50291	251
229F6-42201	179	231A0-40362	248	232A8-42201	251	234A0-50301	251
229F6-42201	179	231A0-40372	248	232A8-42201	259	234A0-50311	251
229F6-42201	180	231A0-40382	248	232A8-42201	259	234A0-50321	251
229F6-42211	64	231A0-70602	256	232A8-42601	259	234A0-50331	251
229F6-42211	176	231A0-70612	256	232A8-42621	259	234A0-50341	251
229F6-42211	176	231A0-70622	256	232A8-42631	259	234A0-50351	251
229F6-42211	176	231A0-70632	256	232N7-60101	190	234A0-50361	251
229F6-42211	176	231A0-70642	256	232N7-62001	209	234A0-50371	251
229F6-42211	176	231A0-70652	256	232N7-62051	217	234A0-50381	251
229F6-42211	176	231A0-70662	256	232W9-12001	222	234A0-50501	251
229F6-42211	176	231A0-70672	256	232W9-12011	222	234A0-50511	251
229F6-42211	176	231A0-70682	256	232W9-12021	222	234A0-50521	251
229F6-42211	177	231A0-70692	256	232W9-12051	220	234A0-50531	251
229F6-42211	177	231A0-70702	256	232W9-12101	222	234A0-50541	251
229F6-42211	179	231A0-82001	250	232W9-12111	222	234A0-50551	251
229F6-42211	179	231A0-82001	258	23200-62171	260	234A0-50561	251
229F6-42211	179	231A8-10101	239	23200-72211	256	234A0-50571	251
229F6-42211	179	231A8-10101	239	23200-72221	256	234A0-50581	251
229G7-82011	216	231A8-10101	245	23232-42072	43	234A0-50591	251
229G7-82051	216	231A8-10101	245	23232-42072	44	234A0-50601	251
229G7-82051	216	231A8-10101	253	23232-42072	45	234A0-50611	251
229G7-82051	217	231A8-10101	253	23232-42072	46	234A0-50621	251
229G7-82051	217	231A8-10171	239	23232-42072	47	234A0-50631	251
229G7-82101	216	231A8-10171	245	23232-42072	48	234A0-50641	251
229G7-82101	217	231A8-10171	253	23235-40091	152	234A0-50651	251
22959-12052	222	231A8-12001	245	233A1-02001	6	234A0-50661	251
22959-12052	224	231A8-12001	253	233H7-62001	208	234A0-50671	251
230C1-02041	129	231A8-12011	245	233H7-62051	217	234A0-50681	251
230C1-02041	130	231A8-12011	253	23302-42311	55	234A0-50701	251
230C1-02041	131	231A8-12021	245	23302-42311	56	234A0-50711	251
230C1-02041	174	231A8-12021	253	23302-42311	57	234A0-50721	251
230C2-42201	44	231A8-12031	245	234A0-50001	251	234A0-50731	251
230C2-42201	47	231A8-12031	253	234A0-50011	251	234A0-50741	251
230C2-42201	48	231A8-51001	219	234A0-50021	251	234A0-50751	251
230C5-55021	156	231A8-51011	219	234A0-50031	251	234A0-50761	251
230C5-55031	156	231A8-51011	219	234A0-50041	251	234A0-50771	251
230C5-55041	156	231A8-51011	219	234A0-50051	251	234A0-50781	251
230C5-55051	156	231A8-51011	219	234A0-50061	251	234A0-50791	251
230C5-55061	156	231F8-10501	239	234A0-50071	251	234A0-50801	251
230C5-55071	156	231F8-10501	245	234A0-50081	251	234A0-50811	251
230C5-55081	156	231F8-10501	253	234A0-50091	251	234A0-50821	251
230C5-55101	156	231F8-10571	239	234A0-50101	251	234A0-50831	251
230C5-55111	156	231F8-10571	245	234A0-50111	251	234A0-50841	251
230C5-55121	156	231F8-10571	253	234A0-50121	251	234A0-50851	251
231A0-40202	248	232A0-62001	252	234A0-50131	251	234A0-50861	251
231A0-40212	248	232A0-70401	256	234A0-50141	251	234A0-50871	251
231A0-40222	248	232A0-70411	256	234A0-50151	251	234A0-50881	251
231A0-40232	248	232A0-70421	256	234A0-50161	251	234A0-52501	251
231A0-40242	248	232A0-70431	256	234A0-50171	251	234A0-52501	251

Part No.	Fig.No.	Part No.	Fig.No.	Part No.	Fig.No.	Part No.	Fig.No.
234A0-52511	251	234A6-43121	170	234A6-82211	183	234A8-10521	245
234A0-52511	251	234A6-43121	171	234A6-82211	183	234A8-10521	253
234A0-52611	250	234A6-43121	171	234A6-82211	184	234A8-10531	239
234A0-52611	251	234A6-81001	182	234A6-82211	184	234A8-10531	245
234A0-52611	251	234A6-82001	182	234A6-82221	182	234A8-10531	253
234A0-52611	258	234A6-82001	183	234A6-82221	183	234A8-10541	239
234A0-62051	252	234A6-82001	184	234A6-82221	184	234A8-10541	245
234A0-62111	252	234A6-82011	182	234A6-82231	182	234A8-10541	253
234A0-62111	260	234A6-82021	182	234A6-82231	183	234A8-10551	239
234A1-00101	5	234A6-82021	183	234A6-82231	184	234A8-10551	245
234A1-00111	5	234A6-82021	184	234A6-82241	182	234A8-10551	253
234A1-00121	5	234A6-82031	182	234A6-82241	183	234A8-10562	239
234A1-02001	8	234A6-82031	183	234A6-82241	184	234A8-10562	245
234A1-02071	1	234A6-82031	184	234A6-82251	182	234A8-10562	253
234A1-02071	2	234A6-82041	182	234A6-82261	182	234A8-10571	239
234A2-12201	10	234A6-82041	183	234A6-82271	182	234A8-10571	245
234A2-12201	11	234A6-82041	184	234A6-82271	183	234A8-10571	253
234A2-12201	12	234A6-82051	182	234A6-82271	184	234A8-10581	239
234A2-12201	13	234A6-82051	183	234A6-82281	182	234A8-10581	245
234A2-12201	14	234A6-82051	184	234A6-82281	183	234A8-10581	253
234A2-12211	10	234A6-82061	182	234A6-82281	184	234A8-10591	239
234A2-12211	11	234A6-82061	183	234A6-82291	182	234A8-10591	245
234A2-12211	12	234A6-82061	184	234A6-82291	183	234A8-10591	253
234A2-12211	13	234A6-82071	182	234A6-82291	184	234A8-10601	239
234A2-12211	14	234A6-82071	183	234A6-82301	182	234A8-10601	245
234A2-30501	27	234A6-82071	184	234A6-82301	183	234A8-10601	253
234A2-30501	28	234A6-82081	182	234A6-82301	184	234A8-10611	239
234A2-30501	29	234A6-82081	183	234A6-82502	182	234A8-10611	245
234A2-42301	49	234A6-82081	184	234A6-82512	182	234A8-10611	253
234A3-72001	89	234A6-82091	182	234A6-82551	182	234A8-10621	239
234A3-72021	89	234A6-82091	183	234A7-30202	191	234A8-10621	245
234A3-72031	89	234A6-82091	184	234A7-30302	192	234A8-10621	253
234A3-72101	89	234A6-82101	182	234A7-30402	193	234A8-10631	239
234A4-22101	95	234A6-82101	183	234A7-30502	194	234A8-10631	245
234A4-22101	95	234A6-82101	184	234A7-32001	191	234A8-10631	253
234A4-30001	96	234A6-82111	182	234A7-32001	192	234A8-10641	239
234A4-30001	96	234A6-82121	182	234A7-32001	193	234A8-10641	245
234A4-30001	98	234A6-82131	182	234A7-32001	194	234A8-10641	253
234A4-30001	98	234A6-82131	183	234A7-40052	203	234A8-10652	239
234A4-30111	96	234A6-82131	184	234A7-42011	203	234A8-10652	245
234A4-30111	96	234A6-82141	182	234A7-52101	160	234A8-10652	253
234A4-30111	98	234A6-82141	183	234A7-62101	205	234A8-10662	239
234A4-30111	98	234A6-82141	184	234A7-62101	206	234A8-10662	245
234A4-32261	96	234A6-82151	182	234A7-62101	207	234A8-10662	253
234A4-32261	96	234A6-82151	183	234A7-62101	208	234A8-10672	239
234A4-32261	98	234A6-82151	184	234A7-62101	209	234A8-10672	245
234A4-32261	98	234A6-82161	182	234A7-62201	205	234A8-10672	253
234A4-32271	96	234A6-82171	182	234A7-62201	206	234A8-10682	239
234A4-32271	96	234A6-82181	182	234A7-62201	207	234A8-10682	245
234A4-32271	98	234A6-82181	183	234A7-62201	208	234A8-10682	253
234A4-32271	98	234A6-82181	184	234A7-62201	209	234A8-22202	241
234A6-32001	163	234A6-82191	182	234A8-02001	248	234A8-22202	247
234A6-32001	165	234A6-82191	183	234A8-02201	244	234A8-22202	255
234A6-32001	165	234A6-82191	184	234A8-10501	239	234A8-40701	244
234A6-32001	165	234A6-82201	182	234A8-10501	245	234A8-40701	252
234A6-32001	166	234A6-82201	183	234A8-10501	253	234A8-40701	260
234A6-42042	174	234A6-82201	183	234A8-10511	239	234A8-41001	244
234A6-42072	174	234A6-82201	184	234A8-10511	245	234A8-41001	252
234A6-43121	169	234A6-82201	184	234A8-10511	253	234A8-41001	260
234A6-43121	169A	234A6-82211	182	234A8-10521	239	234A8-41101	244

PARTS NUMBER INDEX

Part No.	Fig.No.	Part No.	Fig.No.	Part No.	Fig.No.	Part No.	Fig.No.
234A8-41101	252	23454-40501	104	23647-40041	200	23654-40501	116
234A8-41101	260	23454-40501	106	23647-40121	145	23654-40501	118
234A8-42551	243	23454-40501	108	23648-50161	251	23654-40501	120
234A8-42551	243	23454-40601	104	23650-52841	251	23654-40511	116
234A8-42551	251	23455-42021	148	23650-52841	251	23654-52021	124
234A8-42551	259	23455-42021	149	23650-52851	251	23655-22101	168
234A8-42551	259	23455-42021	150	23650-52851	251	23655-22101	168A
234A8-42561	243	23455-42021	151	23650-52861	251	23655-22101	185
234A8-42561	243	23456-42181	143	23650-52861	251	23655-22101	185
234A8-42561	251	23456-42181	144	23650-83521	259	23656-83001	185
234A8-42561	259	23456-42181	144	23650-83531	259	23656-83001	185
234A8-42561	259	23456-42181	146	23650-83551	259	23656-83011	185
234A8-42571	243	23456-42181	168	23650-83561	259	23656-83011	185
234A8-42571	243	23456-42181	168A	23650-83561	259	23656-83051	185
234A8-42571	251	23457-42041	201	23650-83571	259	23656-83051	185
234A8-42571	259	23457-42041	202	23651-02001	1	23656-83061	185
234A8-42571	259	23457-60301	94	23651-02001	2	23656-83061	185
234A8-42602	244	23457-60301	94A	23651-02011	1	23657-12002	187
234A8-42602	252	23457-60311	94	23651-02011	2	23657-12002	188
234A8-42602	260	23457-60311	94A	23652-12051	15	23657-12002	190
234A8-42611	244	23458-32052	240	23652-12051	23	23657-42131	201
234A8-42611	252	23458-32052	246	23652-12051	23A	23657-60311	205
234A8-42611	260	23458-32052	254	23652-12051	24	23657-60311	206
234A8-42622	244	23467-82041	214	23652-12051	24	23657-60311	207
234A8-42622	252	23467-82041	215	23652-12051	25	23657-60311	208
234A8-42622	260	23467-82041	216	23652-12051	25	23657-60311	209
234A8-43501	243	23467-82041	217	23652-12051	26	23658-42531	243
234A8-43501	250	235C2-40301	37	23652-44001	46	23658-42531	259
234A8-43501	258	235C2-40301	38	23652-44001	48	23658-52101	218
234A8-50103	218	23500-82001	243	23652-44001	67	23658-52101	218
234A8-50113	218	23500-82001	250	23653-02001	88	23658-52401	218
234A8-52162	218	23500-82001	258	23653-02001	88A	23658-52401	218
234A8-52172	218	23500-82001	259	23653-72001	89	23659-12054	221
234B2-42201	37	236A5-10342	127	23653-72031	89	23659-12101	220
234B7-82101	215	236A5-10342	127	23653-72041	89	23659-42161	241
234B7-82111	215	236A5-10342	128	23653-72051	89	23659-42161	247
234H7-60104	216	236A5-10352	127	23653-72062	89	23659-42161	255
234H7-60104	217	236A5-10352	127	23653-72072	89	23670-73581	256
234H7-60301	205	236A5-10352	128	23653-72081	89	23670-82251	250
234H7-60301	206	236A9-19801	220	23653-72091	89	23670-82251	258
234H7-60301	207	236A9-19801	221	23653-72101	89	23670-82261	250
234H7-60301	208	236A9-19811	220	23653-72111	89	23670-82261	258
234H7-60301	209	236A9-19811	220	23653-72131	89	23678-06002	242
234H7-62171	216	236A9-19811	220	23653-72141	89	23678-06002	248
234H7-62171	217	236A9-19811	220	23653-72151	89	23678-06002	256
234H7-62291	216	236A9-19811	220	23653-72161	89	23678-40060	244
234H7-62291	217	236A9-19811	222	23653-72171	89	23678-40070	244
234H7-62301	189	236A9-19811	223	23653-72201	89	23678-40080	260
234H7-62301	190	236A9-19811	224	23653-73011	89	23678-40085	244
234H7-62351	189	236A9-19811	225	23653-73021	89	23678-40095	244
234H7-62351	190	236A9-19811	226	23654-32041	96	23678-40095	244
23452-42181	39	236A9-92101	220	23654-32041	97	23678-40095	260
23452-42181	40	236B2-10101	10	23654-32041	98	23678-40105	260
23453-02071	88	236B2-10102	10	23654-32081	96	23678-40110	244
23453-02071	88A	236F1-00101	1	23654-32081	98	23678-40110	244
23453-02091	88	236G1-00101	1	23654-32161	96	23678-40110	260
23453-02091	88A	236G2-22101	161	23654-32161	97	23678-40120	244
23453-02131	88	236L2-10101	10	23654-32161	98	23678-40120	260
23453-02131	88A	236L2-10102	10	23654-34051	100	23678-40125	244
23454-40501	102	236S1-00101	1	23654-40501	114	23678-40125	244

Part No.	Fig.No.	Part No.	Fig.No.	Part No.	Fig.No.	Part No.	Fig.No.
23678-40130	260	237A2-12201	16	238F5-40061	141A	239A0-40001	248
23678-40135	244	237A2-22101	161	238F5-40071	138A	239A0-40011	248
23678-40145	244	237A2-30101	23	238F5-40201	138A	239A0-40021	248
23678-40145	244	237A2-30101	23A	238F5-40202	138A	239A0-40031	248
23678-40145	244	237A2-42151	39	238F5-40501	138A	239A0-40041	248
23678-40145	244	237A2-42151	39	238F5-40501	139A	239A0-40051	248
23678-40145	260	237A2-42211	43	238F5-40501	139A	239A0-40061	248
23678-40145	260	237A2-42212	43	238F5-40501	140A	239A0-40071	248
23678-40150	244	237A5-22101	136	238F5-40501	141A	239A0-40081	248
23678-40150	260	237B2-10101	10	238F5-40501	142	239A0-40091	248
23678-40160	244	237B2-42211	44	238F5-42421	148	239A0-40101	248
23678-40160	244	237B2-42212	44	238F5-42421	149	239A0-40111	248
23678-40160	260	237H1-02001	3	238F5-42421	150	239A0-40121	248
23678-40165	244	237H1-02001	3	238F5-42421	151	239A0-40131	248
23678-40165	260	237H2-10101	10	238F5-42601	143	239A0-40141	248
23678-40170	244	237H2-10102	10	238F5-42601	144	239A0-40151	248
23678-40170	260	237H2-12201	17	238F5-42601	144	239A0-40161	248
23678-40175	244	23772-12071	10	238F5-42601	145	239A0-40171	248
23678-40185	244	23772-12071	10	238F5-42601	146	239A0-40181	248
23678-40185	260	23772-12071	11	238F5-42601	147	239A0-60101	246
23678-40190	244	23772-12071	11	238F9-12071	221	239A0-70201	256
23678-40190	244	23772-12071	12	238G1-02101	4A	239A0-70211	256
23678-40190	260	23772-12071	12	238G1-02101	5A	239A0-70221	256
23678-40195	260	23772-12071	13	238G1-02111	8	239A0-70231	256
23678-40200	244	23772-12071	13	238G2-10101	14	239A0-70241	256
23678-40200	244	23772-12071	14	238G2-10102	14	239A0-70251	256
23678-40210	244	23772-12071	14	238G2-22021	161	239A0-70261	256
23678-40210	244	23775-42101	144	238G2-22021	162	239A0-70271	256
23678-40210	244	23775-42101	144	238G2-22031	161	239A0-70281	256
23678-40210	260	23775-42101	145	238G2-22031	162	239A0-70291	256
23678-40210	260	23775-42101	146	238G2-22101	162	239A0-70301	256
23678-40215	244	23775-42101	147	238G2-42212	48	239A0-90101	254
23678-40215	260	238A2-12001	11	238G4-50201	121	239A0-90161	260
23678-40230	244	238A2-12001	13	238G4-50201	123	239A0-92101	260
23678-40230	260	238A2-12011	11	238G4-50211	121	239A1-02511	5
23678-40240	244	238A2-12011	13	238G4-50211	123	239A2-10101	11
23678-40245	244	238A2-12201	18	238G4-52201	121	239A2-10101	12
23678-40255	244	238A2-22002	22	238G4-52201	123	239A2-10102	11
23678-40255	260	238A2-30101	24	238G5-40021	140A	239A2-10102	12
23678-40255	260	238A2-42151	39	238G5-40031	140A	239A2-12021	15
23678-40265	244	238A2-42151	40	238G5-40201	140A	239A2-12141	11
23678-40270	244	238A2-42211	45	238G5-40202	140A	239A2-12141	12
23678-40275	260	238A9-92101	220	238G6-12401	99	239A2-12141	13
23678-40280	244	238B2-10101	13	238K5-40251	142	239A2-22101	162
23678-40290	260	238B2-10102	13	238L1-02001	8	239A2-40501	35
23678-40310	244	238B2-42211	47	238S1-00101	2	239A2-42031	39
23678-40335	244	238F1-00101	2	238S2-12201	20	239A2-42031	40
23678-42401	244	238F1-00102	2	238S5-40201	139A	239A2-42101	39
23678-42401	260	238F1-00102	2	238S5-40201	139A	239A2-42101	40
23678-53001	219	238F2-12001	12	238S5-40201	141A	239A2-42201	41
23678-53101	219	238F2-12001	14	238S5-40202	139A	239A2-42221	50
23678-53101	219	238F2-12011	12	238S5-40202	139A	239A2-52001	74
23679-45051	61	238F2-12011	14	238S5-40202	141A	239A2-52001	78
23679-45051	244	238F2-12201	19	23813-00071	100	239A2-52061	74
23679-45051	260	238F2-30101	25	23813-00081	100	239A2-52061	78
237A1-02101	3	238F2-42212	46	23819-20011	227	239A3-02001	88A
237A2-10101	10	238F5-22101	137	23819-20011	227	239A4-12102	90
237A2-10102	10	238F5-40061	138A	23819-20021	227	239A4-12112	90
237A2-12002	10	238F5-40061	139A	23819-20021	227	239A4-12121	90
237A2-12011	10	238F5-40061	139A	23870-52821	82	239A4-12121	91

PARTS NUMBER INDEX

Part No.	Fig.No.	Part No.	Fig.No.	Part No.	Fig.No.	Part No.	Fig.No.
239A4-12131	90	239A5-40101	144	239A5-42401	143	239A8-20131	247
239A4-12201	92	239A5-40101	144	239A5-42411	143	239A8-20131	255
239A4-12201	93	239A5-40101	145	239A5-42441	148	239A8-20141	247
239A4-12211	92	239A5-40101	146	239A5-42441	149	239A8-20141	255
239A4-12211	93	239A5-40101	153	239A5-42441	150	239A8-22111	255
239A4-12211	94	239A5-40102	143	239A5-42441	151	239A8-30002	242
239A4-12211	94A	239A5-40102	144	239A5-42451	148	239A8-30012	242
239A4-12402	90	239A5-40102	144	239A5-42461	148	239A8-30022	242
239A4-12411	90	239A5-40102	145	239A5-42471	148	239A8-30032	242
239A4-12431	90	239A5-40102	146	239A5-42491	148	239A8-30042	242
239A4-12441	90	239A5-40102	147	239A5-42491	150	239A8-30052	242
239A4-12501	35	239A5-40102	153A	239A5-50101	156	239A8-30062	242
239A4-12501	36	239A5-40201	138	239A6-40201	167	239A8-30072	242
239A4-12511	35	239A5-40501	143	239A6-40301	169	239A8-30082	242
239A4-12511	36	239A5-40631	153	239A6-40301	169A	239A8-30092	242
239A4-12521	35	239A5-40641	153A	239A6-40501	168	239A8-30102	242
239A4-12521	36	239A5-42071	148	239A6-40502	168A	239A8-30112	242
239A4-12541	35	239A5-42071	149	239A6-42001	167	239A8-30122	242
239A4-22001	92	239A5-42071	150	239A6-42251	168A	239A8-30132	242
239A4-22001	93	239A5-42071	151	239A6-42251	168A	239A8-30142	242
239A4-30131	96	239A5-42101	153	239A6-42251	168A	239A8-30152	242
239A4-30131	98	239A5-42101	153A	239A6-42251	168A	239A8-30162	242
239A4-30251	96	239A5-42121	153	239A6-42251	168A	239A8-30172	242
239A4-30251	98	239A5-42121	153A	239A6-42291	169	239A8-30182	242
239A4-32101	96	239A5-42161	153A	239A6-42291	169A	239A8-30202	242
239A4-32101	98	239A5-42171	153	239A6-42751	37	239A8-30212	242
239A4-32111	96	239A5-42181	153	239A6-42751	38	239A8-30222	242
239A4-32111	98	239A5-42181	153A	239A6-43001	167	239A8-30232	242
239A4-50201	121	239A5-42191	153	239A6-43011	167	239A8-30242	242
239A4-50201	123	239A5-42191	153A	239A6-43101	167	239A8-30252	242
239A5-10111	129	239A5-42221	153	239A6-43111	167	239A8-30262	242
239A5-10111	129	239A5-42221	153A	239A6-50112	174	239A8-30272	242
239A5-10121	129	239A5-42251	153A	239A6-50302	174	239A8-30282	242
239A5-10121	129	239A5-42261	153	239A6-52131	174	239A8-30292	242
239A5-10342	127	239A5-42271	153	239A6-52141	174	239A8-30302	242
239A5-10342	128	239A5-42271	153A	239A6-52171	174	239A8-30312	242
239A5-10352	127	239A5-42281	153	239A6-52221	174	239A8-30322	242
239A5-10352	128	239A5-42281	153A	239A6-52231	174	239A8-30332	242
239A5-12401	129	239A5-42291	153	239A6-52601	174	239A8-30342	242
239A5-12401	130	239A5-42291	153A	239A6-52601	174	239A8-30352	242
239A5-12401	131	239A5-42301	152	239A7-52001	158	239A8-30362	242
239A5-12411	129	239A5-42311	153	239A7-60301	210	239A8-30372	242
239A5-12411	130	239A5-42311	153A	239A7-60301	212	239A8-30382	242
239A5-12411	131	239A5-42321	153	239A7-60311	210	239A8-42001	244
239A5-12501	132	239A5-42321	153A	239A7-60311	212	239A8-42001	252
239A5-12521	132	239A5-42351	148	239A7-62111	213	239A9-12001	220
239A5-20302	136	239A5-42351	149	239A7-62112	213	239A9-12011	220
239A5-20302	137	239A5-42351	149	239A7-62121	213	239A9-12301	221
239A5-20402	136	239A5-42351	150	239A7-62131	213	239A9-92001	135
239A5-20402	137	239A5-42351	151	239A7-62211	213	239A9-92001	135
239A5-22151	136	239A5-42381	37	239A7-62251	213	239B2-10101	14
239A5-22151	137	239A5-42381	38	239A7-62261	213	239B2-12141	11
239A5-22253	136	239A5-42381	70	239A7-62351	213	239B2-12141	12
239A5-22253	137	239A5-42381	72	239A7-62401	213	239B2-12141	13
239A5-40061	138	239A5-42381	143	239A8-20002	240	239B2-12141	14
239A5-40061	139	239A5-42381	144	239A8-20101	247	239B2-42201	42
239A5-40061	139	239A5-42381	144	239A8-20101	255	239B2-42301	39
239A5-40061	141	239A5-42381	145	239A8-20111	247	239B2-42301	40
239A5-40071	138	239A5-42381	146	239A8-20121	247	239B5-40021	140
239A5-40101	143	239A5-42381	147	239A8-20121	255	239B5-40031	140

Part No.	Fig.No.	Part No.	Fig.No.	Part No.	Fig.No.	Part No.	Fig.No.
239B5-40201	140	239B5-42621	148	239H5-42011	147	242F6-82101	183A
239B5-42201	138	239B5-42621	149	239H5-42021	147	242F6-82101	184A
239B5-42201	138A	239B5-42621	150	239H5-42031	147	242F6-82111	182A
239B5-42201	139	239B5-42621	151	239H5-42101	147	242F6-82111	183A
239B5-42201	139	239B5-42701	148	239H5-42121	147	242F6-82111	184A
239B5-42201	139A	239B5-42701	149	239H5-42151	147	242F6-82121	182A
239B5-42201	139A	239B5-42701	150	239H5-42161	147	242F6-82121	183A
239B5-42201	140	239B5-42701	151	239H5-42171	147	242F6-82121	184A
239B5-42201	140A	239B5-42721	143	239H5-42301	144	242F6-82131	182A
239B5-42201	141	239B5-42721	144	239H5-42301	144	242F6-82141	182A
239B5-42201	141A	239B5-42721	144	239H5-42301	146	242F6-82151	182A
239B5-42201	142	239B5-42721	145	239H5-42371	144	242F6-82151	183A
239B5-42211	138	239B5-42721	146	239H5-42371	144	242F6-82151	184A
239B5-42211	138A	239B6-50302	174	239H5-42371	146	242F6-82161	182A
239B5-42211	139	239B6-52221	174	239H5-42371	147	242F6-82161	183A
239B5-42211	139	239B6-52231	174	239H5-42381	149	242F6-82161	184A
239B5-42211	139A	239B6-52601	174	239H5-42381	151	242F6-82171	182A
239B5-42211	139A	239B6-52601	174	239H5-42451	144	242F6-82171	183A
239B5-42211	140	239C9-12001	220	239H5-42451	144	242F6-82171	184A
239B5-42211	140A	239C9-12011	220	239H5-42451	146	242F6-82181	182A
239B5-42211	141	239G5-40101	145	239H5-42461	144	242F6-82181	183A
239B5-42211	141A	239G5-40501	145	239H5-42461	144	242F6-82181	184A
239B5-42211	142	239G5-40502	145	239H5-42461	146	242F6-82191	182A
239B5-42221	138	239H1-02001	5	239H5-42461	147	242F6-82191	183A
239B5-42221	138	239H1-02001	5	239H7-52001	158	242F6-82191	184A
239B5-42221	138A	239H2-10101	14	239H7-52001	159	242F6-82201	182A
239B5-42221	138A	239H2-10102	14	239H7-60201	189	242F6-82211	182A
239B5-42221	139	239H5-40191	144	239H7-60401	210	242F6-82221	182A
239B5-42221	139	239H5-40191	144	239H7-60401	210	242F6-82231	182A
239B5-42221	139	239H5-40191	146	239H7-60401	212	242F6-82241	182A
239B5-42221	139	239H5-40201	144	239H7-82001	216	242F6-82241	183A
239B5-42221	139A	239H5-40201	144	239T9-12071	222	242F6-82241	184A
239B5-42221	139A	239H5-40201	146	23917-42191	251	242F6-82251	182A
239B5-42221	139A	239H5-40211	144	23917-42191	259	242F6-82261	182A
239B5-42221	139A	239H5-40211	144	242F6-80101	182A	242F6-82261	183A
239B5-42221	140	239H5-40211	146	242F6-80201	183A	242F6-82261	184A
239B5-42221	140	239H5-40221	139	242F6-80201	184A	242F6-82271	182A
239B5-42221	140A	239H5-40221	139	242F6-82001	182A	242F6-82281	182A
239B5-42221	140A	239H5-40221	141	242F6-82001	183A	242F6-82291	182A
239B5-42221	141	239H5-40311	144	242F6-82001	184A	242F6-82291	183A
239B5-42221	141	239H5-40311	144	242F6-82011	182A	242F6-82291	184A
239B5-42221	141A	239H5-40311	146	242F6-82011	183A	242F6-82301	182A
239B5-42221	141A	239H5-40311	147	242F6-82011	184A	242F6-82311	182A
239B5-42221	142	239H5-40331	142	242F6-82021	182A	242F6-82321	182A
239B5-42221	142	239H5-40351	142	242F6-82031	182A	242F6-82331	182A
239B5-42221	147	239H5-40361	142	242F6-82031	183A	242F6-82341	183A
239B5-42231	138	239H5-40411	139	242F6-82031	184A	242F6-82341	184A
239B5-42231	139	239H5-40411	139	242F6-82041	182A	242F6-82351	183A
239B5-42231	139	239H5-40411	139A	242F6-82041	183A	242F6-82351	184A
239B5-42231	140	239H5-40411	139A	242F6-82041	184A	242F6-82361	183A
239B5-42231	141	239H5-40411	141	242F6-82051	182A	242F6-82361	184A
239B5-42421	148	239H5-40411	141A	242F6-82051	183A	242F6-82371	183A
239B5-42421	149	239H5-40451	147	242F6-82051	184A	242F6-82371	184A
239B5-42421	150	239H5-40481	147	242F6-82061	182A	24234-30551	95
239B5-42421	151	239H5-40501	147	242F6-82071	182A	24234-30551	95
239B5-42501	145	239H5-40511	147	242F6-82071	183A	24234-30551	96
239B5-42601	148	239H5-40521	147	242F6-82071	184A	24234-30551	98
239B5-42601	149	239H5-40541	147	242F6-82081	182A	24234-30551	121
239B5-42601	150	239H5-40601	147	242F6-82091	182A	24234-30551	123
239B5-42601	151	239H5-40611	147	242F6-82101	182A	24234-30561	96

PARTS NUMBER INDEX

Part No.	Fig.No.	Part No.	Fig.No.	Part No.	Fig.No.	Part No.	Fig.No.
24234-30561	98	24868-42111	243	256C7-42281	147	271A7-60351	190
24234-30561	121	24868-42111	251	256G1-08011	5	271A9-12191	238
24234-30561	123	24868-42111	259	256G1-08021	5	271A9-12251	221
24234-32411	96	24868-42111	259	256J6-42291	60	271F4-12221	90
24234-32411	98	25592-42081	39	25784-52342	122	271F4-12221	91
24234-32421	96	25592-42081	40	25785-43091	143	271F4-12231	90
24234-32421	98	25592-42121	161	25787-82081	214	271F4-12231	91
243C4-12021	90	25592-42121	162	25787-82081	215	271F4-12241	90
243C4-12021	91	25594-52141	92	25789-12051	221	271F4-12241	91
24320-52001	251	25594-52141	93	25816-42761	172	272A8-52101	97
24329-46201	244	25594-52362	121	25952-42311	53	272E7-52022	161
24329-46201	260	25594-52362	123	25953-72001	89	272E7-52022	162
24352-42521	37	25594-52431	124	25954-52061	121	272K8-52201	242
24352-42521	38	25595-42311	143	25954-52061	123	272K8-52201	248
24353-72001	88	25595-42311	153	25954-52071	121	272K8-52201	256
24353-72001	88A	25595-42311	153A	25954-52071	123	273A9-12242	220
24354-32311	100	25595-42381	153A	25954-52081	121	27397-52101	81
24389-46021	250	25595-42391	153A	25954-52081	123	27410-53111	251
24389-46021	258	25595-42411	153	25954-52091	121	27410-53111	251
24452-52002	88	25595-42411	153A	25954-52091	123	27410-53201	250
24452-52002	88A	25595-42421	153	25957-62201	215	27410-53201	258
24453-02061	88	25595-42421	153A	25957-62201	216	27415-52151	156
24453-02061	88A	25595-42452	143	25957-62201	217	27419-12051	220
24453-02102	88	25595-42452	143	25958-52201	122	27419-12061	222
24453-02102	88A	25595-42491	143	25958-52211	122	27419-12061	223
24453-02121	88	25595-42491	144	25958-52221	122	27419-12061	224
24453-02121	88A	25595-42491	144	26062-42881	37	27419-12061	225
24454-30512	96	25595-42491	145	26062-42881	38	27419-12061	226
24454-30512	98	25595-42491	146	26062-42881	55	27419-12062	221
24454-32161	96	25595-42491	147	26062-42881	56	27419-12062	222
24454-32161	98	25596-42361	51	26062-42881	57	27419-12071	222
24454-32232	96	25596-42361	51	26062-42881	58	27419-12071	223
24454-32232	97	25596-42361	51A	26062-42881	70	27419-12071	224
24454-32232	98	25596-42361	51A	26062-42881	71	27419-12071	225
24454-32391	96	25596-42361	53	26062-42881	72	27419-12071	226
24454-32391	98	25596-42361	54	26094-17001	94	27419-12072	221
24454-39812	96	25596-42361	54	26094-17021	94	27419-12072	222
24454-39812	98	25596-42361	168A	26094-17081	94	27419-12101	220
24459-42951	244	25596-42361	168A	26094-17091	94	27455-22011	136
24459-42951	252	25596-42361	168A	26094-17101	94	27539-12011	220
24459-42951	260	25596-42361	168A	26094-17111	94	27539-12021	220
24469-42701	122	25596-42361	168A	26094-17121	94	27652-62211	49
24662-22032	22	25597-62211	92	26094-17141	94	27662-62711	168A
24662-22131	22	25597-62211	93	26094-17151	94	27662-62721	129
24662-22141	22	25599-22001	227	26314-17001	94	27662-62721	131
24846-80302	185	25599-22001	227	26314-17021	94	27662-63041	168
24846-80302	185	256A1-08031	4	27042-42312	136	27662-63041	168A
24846-82001	185	256A1-08031	5	27042-42312	137	27662-63041	168A
24846-82001	185	256A2-42171	39	27042-42312	210	277H7-60501	213
24846-82011	185	256A2-42171	40	27042-42312	211	277H7-60601	199
24846-82011	185	256C1-08011	3	27042-42312	212	277P0-50101	250
24846-82021	185	256C1-08011	4	27042-43501	60	277P0-50111	250
24846-82021	185	256C1-08011	4A	27042-43501	60A	277P0-50121	250
24846-82031	185	256C1-08011	5	27042-64311	69	277P0-50131	250
24846-82031	185	256C1-08011	5A	27049-12172	220	277P0-50141	250
24846-82041	185	256C5-12671	167	271A7-52301	158	277P0-50151	250
24846-82041	185	256C5-12671	174	271A7-52301	158	277P0-50161	250
24846-82051	185	256C7-42281	144	271A7-52301	159	277P0-50171	250
24846-82051	185	256C7-42281	144	271A7-52301	159	277P0-50181	250
24868-42111	243	256C7-42281	146	271A7-60351	187	277P0-50191	250

Part No.	Fig.No.	Part No.	Fig.No.	Part No.	Fig.No.	Part No.	Fig.No.
277P0-50201	250	277P0-60411	252	277P0-81382	259	277P8-22061	248
277P0-50211	250	277P0-60421	252	277P0-81392	259	277P8-22061	254
277P0-50221	250	277P0-60431	252	277P0-81402	259	277P8-22061	256
277P0-50231	250	277P0-60441	252	277P0-81502	259	277P8-22061	256
277P0-50241	250	277P0-60451	252	277P0-81512	259	277P8-22071	240
277P0-50251	250	277P0-60461	252	277P0-81522	259	277P8-22071	242
277P0-50261	250	277P0-60471	252	277P0-81532	259	277P8-22071	242
277P0-50271	250	277P0-60481	252	277P0-81542	259	277P8-22071	246
277P0-50281	250	277P0-80001	258	277P0-81552	259	277P8-22071	248
277P0-50301	250	277P0-80011	258	277P0-81562	259	277P8-22071	248
277P0-50311	250	277P0-80021	258	277P0-81572	259	277P8-22071	248
277P0-50321	250	277P0-80031	258	277P0-81582	259	277P8-22071	254
277P0-50331	250	277P0-80041	258	277P0-81592	259	277P8-22071	256
277P0-50341	250	277P0-80051	258	277P0-81602	259	277P8-22071	256
277P0-50351	250	277P0-80061	258	277P0-81702	259	277P8-22071	256
277P0-50361	250	277P0-80071	258	277P0-81712	259	277P8-22081	240
277P0-50371	250	277P0-80081	258	277P0-81722	259	277P8-22081	242
277P0-50381	250	277P0-80091	258	277P0-81732	259	277P8-22081	242
277P0-50391	250	277P0-80101	258	277P0-81742	259	277P8-22081	246
277P0-50411	250	277P0-80301	258	277P0-81752	259	277P8-22081	248
277P0-50421	250	277P0-80311	258	277P0-81762	259	277P8-22081	248
277P0-50431	250	277P0-80321	258	277P0-81772	259	277P8-22081	248
277P0-50441	250	277P0-80331	258	277P0-81782	259	277P8-22081	254
277P0-50451	250	277P0-80341	258	277P0-81792	259	277P8-22081	256
277P0-50461	250	277P0-80351	258	277P0-81802	259	277P8-22081	256
277P0-50471	250	277P0-80371	258	277P0-81902	259	277P8-22081	256
277P0-50481	250	277P0-80381	258	277P0-81912	259	277P8-32701	157
277P0-50501	250	277P0-80391	258	277P0-81922	259	277P8-32701	242
277P0-50511	250	277P0-80401	258	277P0-81932	259	277P8-32701	248
277P0-50521	250	277P0-80501	258	277P0-81942	259	277P8-32701	256
277P0-50531	250	277P0-80511	258	277P0-81952	259	277P8-40001	243
277P0-50541	250	277P0-80521	258	277P0-81962	259	277P8-40011	243
277P0-50551	250	277P0-80531	258	277P0-81972	259	277P8-40021	243
277P0-50561	250	277P0-80541	258	277P0-81982	259	277P8-40031	243
277P0-50571	250	277P0-80551	258	277P0-81992	259	277P8-40041	243
277P0-50581	250	277P0-80561	250	277P0-82002	259	277P8-40051	243
277P0-50591	250	277P0-80561	258	277P0-82061	250	277P8-40061	243
277P0-50601	250	277P0-80571	258	277P0-82061	258	277P8-40071	243
277P0-50601	258	277P0-80581	258	277P0-82071	250	277P8-40081	243
277P0-50611	250	277P0-80591	258	277P0-82071	258	277P8-40091	243
277P0-50621	250	277P0-80601	258	277P0-82501	250	277P8-40101	243
277P0-50631	250	277P0-81101	259	277P0-82501	258	277P8-40111	243
277P0-50641	250	277P0-81111	259	277P0-83001	259	277P8-40121	243
277P0-50651	250	277P0-81121	259	277P0-89811	259	277P8-40131	243
277P0-50661	250	277P0-81131	259	277P0-92061	260	277P8-40141	243
277P0-50671	250	277P0-81141	259	277P8-22051	240	277P8-40151	243
277P0-50681	250	277P0-81151	259	277P8-22051	240	277P8-40161	243
277P0-59801	250	277P0-81161	259	277P8-22051	242	277P8-40171	243
277P0-59801	258	277P0-81171	259	277P8-22051	242	277P8-40181	243
277P0-60301	252	277P0-81181	259	277P8-22051	246	277T0-62071	252
277P0-60311	252	277P0-81191	259	277P8-22051	248	277T0-62071	260
277P0-60321	252	277P0-81201	259	277P8-22051	248	277T0-90151	260
277P0-60331	252	277P0-81302	259	277P8-22051	254	277T0-92131	260
277P0-60341	252	277P0-81312	259	277P8-22051	256	27717-52081	216
277P0-60351	252	277P0-81322	259	277P8-22051	256	27717-52081	217
277P0-60361	252	277P0-81332	259	277P8-22051	256	27732-42221	133
277P0-60371	252	277P0-81342	259	277P8-22061	240	27732-42311	49
277P0-60381	252	277P0-81352	259	277P8-22061	240	27732-42311	51
277P0-60391	252	277P0-81362	259	277P8-22061	242	27732-42311	54
277P0-60401	252	277P0-81372	259	277P8-22061	246	27732-42311	55

Part No.	Fig.No.	Part No.	Fig.No.	Part No.	Fig.No.	Part No.	Fig.No.
27732-42311	55	509S5-92241	26	513B0-52061	232	514A3-72201	98
27732-42311	56	510F0-82032	27	513B0-52161	234	514A3-72211	96
27732-42311	57	510F0-82032	28	513B0-52301	235	514A3-72211	97
27732-42311	58	510F0-82032	28A	514A0-82022	28	514A3-72211	97
27732-42311	59	510F0-82032	29	514A0-82022	28A	514A3-72211	98
27732-42311	64	51152-82012	222	514A0-82081	28	514A3-82002	222
27732-42311	66	51152-82012	224	514A0-82081	28A	514A3-82002	223
27732-42311	71	51152-82022	222	514A0-82251	28	514A3-82002	224
27732-42311	72	51152-82022	224	514A0-82251	28A	514A3-82002	225
27912-62441	156	51153-02001	224	514A0-82251	29	514A3-82002	226
27970-53141	259	51230-50271	228	514A1-41001	58	514A3-82012	222
27979-43101	244	51230-52051	228	514A1-41001	71	514A3-82012	224
27979-43101	252	51230-52071	228	514A1-41001	72	514A3-82022	222
27979-43101	260	51230-52101	228	514A1-41011	58	514A3-82022	224
280C2-42301	36	51230-52121	228	514A1-41021	58	514A3-82032	224
280C2-42301	36	51230-52141	228	514A1-41031	58	514A3-82042	224
280C2-42311	36	51230-52171	228	514A1-42041	58	514A3-82042	226
280C2-42311	36	51230-52301	228	514A1-42041	60	514A3-82052	224
280C2-42331	35	51230-52311	228	514A1-42041	60A	514A3-82062	224
280C2-42331	36	51230-52311	228	514A1-42041	64	514A3-82072	224
280C2-42341	36	51230-52321	228	514A1-42191	58	514A3-82301	220
280C2-42351	35	51230-52331	228	514A1-42191	71	514A3-82301	254
280C2-42351	36	51232-82001	222	514A1-42191	72	514A3-82321	220
281E7-42101	204	51232-82001	223	514A2-40104	97	514A3-82321	254
29690-83011	259	51232-82001	224	514A2-40462	122	514A3-82331	220
29690-83021	259	51232-82001	225	514A2-42481	97	514A3-82331	254
29690-83021	259	51232-82001	226	514A2-42512	211	514A3-82341	220
3956323	65	51232-82011	222	514A2-42601	94	514A3-82341	254
509K2-30101	36	51232-82011	224	514A2-42611	94	514A3-82351	220
509K2-30101	36	51232-82021	222	514A2-42621	94	514A3-82351	254
509M5-92381	30	51232-82021	224	514A2-42721	97	514A3-82361	220
509P5-90101	26	51232-82032	222	514A2-44022	97	514A3-82361	254
509P5-92001	26	51233-02011	224	514A2-44022	97	514A3-82371	220
509P5-92011	26	51233-02021	224	514A2-44022	97	514A3-82371	254
509P5-92021	26	51233-83021	224	514A2-44071	97	514A3-82381	220
509P5-92031	26	51233-83221	224	514A2-44071	97	514A3-82381	254
509P5-92041	26	51233-83221	226	514A2-44071	97	514A3-82391	220
509P5-92051	26	51233-83421	224	514A2-49803	122	514A3-82391	254
509P5-92061	26	51233-83621	224	514A2-72411	204	514A3-82601	102
509P5-92071	26	51233-83821	224	514A2-72411	204	514A3-82601	104
509P5-92081	26	51240-52021	232	514A2-72411	204	514A3-82601	106
509P5-92091	26	51240-52151	234	514A2-82012	222	514A3-82601	108
509P5-92101	26	51240-52151	234	514A2-92011	220	514A5-12011	127
509P5-92111	26	51240-52411	234	514A3-02002	224	514A5-12011	127
509P5-92121	26	51240-52421	234	514A3-71701	240	514A5-12011	128
509P5-92181	26	51240-52431	232	514A3-71702	246	514A5-12011	128
509P5-92211	26	51240-52441	233	514A3-71702	254	514A5-12011	129
509P5-92231	26	51240-52451	233	514A3-72052	96	514A5-12011	129
509P5-92241	26	51240-52481	234	514A3-72052	97	514A5-12011	130
509P5-92351	31	51240-52491	233	514A3-72052	97	514A5-12011	131
509P5-92451	30	51240-52501	234	514A3-72052	97	514A5-12011	173
509P5-92471	30	51240-52511	234	514A3-72052	98	514A5-12021	135
509P5-92481	30	51240-52521	234	514A3-72062	96	514A5-12701	91
509P5-92491	26	51240-52531	234	514A3-72062	97	514A5-12701	167
509P5-92511	26	51240-52671	235	514A3-72062	97	514A5-32341	64
509P5-92521	26	51240-52681	235	514A3-72062	97	514A5-32341	64
509P9-90101	51	513A0-52331	229	514A3-72062	98	514A7-42002	88
509P9-90101	54	513A0-52342	230	514A3-72091	50	514A7-42002	88A
509P9-90101	54	513A0-52342	230	514A3-72101	100	514E2-92001	220
509P9-90101	54	513B0-52011	232	514A3-72201	96	514T2-72061	130

Part No.	Fig.No.	Part No.	Fig.No.	Part No.	Fig.No.	Part No.	Fig.No.
514T6-42001	185	516G2-72711	224	516G5-12511	135	518G0-52101	230
514T6-42001	185	516G2-72711	225	516G5-12511	135	518G0-90111	129
514T7-20201	60	516G2-72711	226	516G5-13051	127	518G0-90111	129
514T7-20201	60A	516G2-82051	222	516G5-13051	128	518G0-90211	130
514T7-22061	60	516G2-82061	222	516G5-13151	127	518G2-70101	1
514T7-22061	60A	516G3-82001	224	516G5-13151	128	518G2-72121	39
516G0-60011	4	516G3-82011	222	516G5-13511	135	518G2-80101	130
516G0-60011	5	516G3-82011	224	516G5-13511	135	518G2-80121	130
516G0-60101	3	516G3-82021	224	516G5-13511	135	518G2-80121	130
516G0-60101	4A	516G3-82031	224	516G6-12051	65	518G2-80231	126
516G0-60101	5A	516G3-82031	226	516G6-20101	32	518G8-12001	21
516G0-62001	4	516G3-82041	224	516G6-20201	32	518G8-12051	21
516G0-62001	5	516G3-82051	224	516G6-22011	73	518G8-12101	21
516G0-62011	3	516G3-82061	226	516G6-22031	32	518H2-70101	1
516G0-62011	4A	516G3-82071	226	516G6-22031	32	519M2-60101	2
516G0-62011	5A	516G3-82101	224	516G6-22031	33	519M2-60102	2
516G1-32002	49	516G3-82111	222	516G6-22031	33	520A0-52201	232
516G1-32012	49	516G3-82111	224	516G6-22031	34	520A0-52201	235
516G1-42021	26	516G3-82121	222	516G6-22031	34	520F7-22001	62
516G1-42021	178	516G3-82121	224	516G6-22051	32	520R8-30101	80
516G1-42021	179	516G3-82131	224	516G6-22051	32	520R8-30102	80
516G1-42021	179	516G3-82141	224	516G6-22051	33	52050-53001	232
516G1-42021	180	516G3-82141	226	516G6-22051	33	52050-53011	232
516G1-42101	55	516G3-82151	224	516G6-22051	34	52050-53021	232
516G1-42101	57	516G3-82161	224	516G6-22051	34	52050-53021	232
516G1-42101	64	516G3-82171	224	516G6-90401	178	52050-59861	237
516G1-42111	55	516G3-82181	226	516G6-92001	68	52050-59872	235
516G1-42111	56	516G3-82191	226	516G6-92011	68	521A0-52102	230
516G1-42111	56	516G3-82201	224	516G6-92022	68	521A2-42001	39
516G1-42111	57	516G3-82211	222	516G6-92031	68	521A2-42001	40
516G1-42121	57	516G3-82211	224	516G6-92151	68	521A2-42061	67
516G1-42151	55	516G3-82221	222	516G6-92201	68	521B0-52011	232
516G1-42151	56	516G3-82221	224	516G6-92211	68	521B0-52012	232
516G1-42151	57	516G3-82232	224	516G7-22001	61	522A1-10201	4
516G1-42211	53	516G3-82241	224	516G7-50201	179	522A1-10201	4A
516G1-42211	58	516G3-82241	226	516G7-50201	179	522A1-10201	5
516G1-42211	64	516G3-82251	224	516G7-50211	180	522A1-10201	5A
516G1-42251	176	516G3-82261	224	516G7-50301	66	522A1-42051	55
516G1-42251	176	516G3-82271	224	516G7-50401	178	522A1-42051	56
516G1-42251	176	516G3-82281	226	516G8-92001	58	522A1-42051	57
516G1-42251	176	516G3-82291	226	516G9-10101	59	522A1-42061	55
516G1-42251	176	516G3-82521	39	516G9-12011	59	522A1-42061	56
516G1-42251	176	516G3-82801	222	516G9-92101	51	522A1-42061	57
516G1-42251	176	516G3-82801	223	516G9-92101	54	522A2-10401	144
516G1-42251	177	516G3-82801	224	516G9-92101	54	522A2-10401	144
516G2-40451	94	516G3-82801	225	516G9-92101	54	522A2-10401	146
516G2-40451	94A	516G3-82801	226	516H8-80101	32	522A2-10401	147
516G2-42401	94	516G3-82811	224	516M5-12311	135	522A2-10401	154
516G2-42411	94	516G3-82821	222	516M5-12311	135	522A2-10401	154
516G2-72051	163	516G3-82821	224	517G6-20101	33	522A2-11601	154
516G2-72071	28	516G3-82831	222	517G6-20201	33	522A2-11601	154
516G2-72071	28A	516G3-82831	224	517H8-80101	33	522A2-18011	155
516G2-72071	29	516G3-82841	224	518G0-50301	232	522A2-18011	155
516G2-72701	222	516G3-82851	224	518G0-50401	228	522A2-18021	155
516G2-72701	223	516G3-82851	226	518G0-50421	228	522A2-18021	155
516G2-72701	224	516G3-82861	224	518G0-52001	1	522A2-18031	155
516G2-72701	225	516G3-82871	224	518G0-52001	228	522A2-18031	155
516G2-72701	226	516G3-82881	224	518G0-52031	231	522A2-18041	155
516G2-72711	222	516G3-82891	226	518G0-52071	231	522A2-18041	155
516G2-72711	223	516G3-82901	226	518G0-52081	231	522A2-18051	155

Part No.	Fig.No.	Part No.	Fig.No.	Part No.	Fig.No.	Part No.	Fig.No.
522A2-18051	155	522A2-61561	89	522B0-92051	9	528F3-82021	226
522A2-18071	155	522A2-72111	222	522E2-82061	220	528F3-82031	226
522A2-18071	155	522A2-72111	223	522E2-82111	220	529F0-82101	28
522A2-18081	155	522A2-72111	224	524G2-10502	75	529F0-82101	28A
522A2-18081	155	522A2-72111	225	524G3-62121	79	529F1-42201	58
522A2-18091	155	522A2-72111	226	524T3-84031	254	529F1-42251	58
522A2-18091	155	522A2-82061	220	524W2-42651	94	529F1-42251	71
522A2-18101	155	522A2-82111	220	524W3-92211	28	529F1-42251	72
522A2-18101	155	522A2-82151	222	524W3-92211	28A	529F2-42611	94
522A2-18111	155	522A3-80401	106	524W5-12091	129	529F3-70401	200
522A2-18111	155	522A3-80401	106	524W5-12091	130	529F3-70411	201
522A2-18121	155	522A3-80451	118	524W5-12091	131	529F3-70411	202
522A2-18121	155	522A3-80451	118	524W5-13351	134	529F3-70421	203
522A2-18131	155	522A3-82441	220	52430-52552	230	529F3-82041	226
522A2-18131	155	522A3-82641	220	526A0-52201	232	529F3-82051	226
522A2-18161	155	522A3-82841	220	526A0-52201	235	529F3-82061	226
522A2-18161	155	522A3-83021	224	52672-72122	222	529F3-82071	226
522A2-18171	155	522A3-83041	220	52672-72122	223	529F3-82081	220
522A2-18171	155	522A3-83061	224	52672-72122	224	529F3-82091	220
522A2-18201	155	522A3-83061	226	52672-72122	225	529F3-82101	220
522A2-18201	155	522A3-83081	224	52672-72122	226	529F3-82101	254
522A2-18211	155	522A3-83221	224	52672-72231	243	529F3-82111	220
522A2-18211	155	522A3-83221	226	52672-72231	250	529F3-82111	254
522A2-18221	155	522A3-83241	220	52672-72231	258	529F3-82161	226
522A2-18221	155	522A3-83281	224	52672-72231	259	529F3-82171	226
522A2-18281	155	522A3-83281	226	52672-82062	222	529F3-82242	226
522A2-18281	155	522A3-83421	224	52672-82073	222	529F3-82252	226
522A2-18301	155	522A3-83441	220	52676-80202	110	529F7-22001	62
522A2-18301	155	522A3-83461	224	52676-80302	110	529F7-22001	63
522A2-18311	155	522A3-83481	224	52676-80402	110	529F7-52241	70
522A2-18311	155	522A3-83621	224	52676-80601	106	529F7-52241	72
522A2-18321	155	522A3-83641	220	52676-80601	106	530C1-42001	55
522A2-18321	155	522A3-83661	224	52676-80802	111	530C3-82361	40
522A2-18331	155	522A3-83681	224	52691-92211	164	53030-52321	230
522A2-18331	155	522A3-83821	224	52691-92221	164	53030-52321	230
522A2-18341	155	522A3-83841	220	528F0-52011	228	53030-52471	63
522A2-18341	155	522A3-83861	224	528F0-52071	230	531A0-50111	228
522A2-18352	155	522A3-83881	224	528F0-52211	232	531A0-50121	228
522A2-18352	155	522A6-80201	106	528F0-52221	232	531A0-50131	229
522A2-18361	155	522A6-80211	106	528F0-52221	236	531A0-50141	229
522A2-18361	155	522A6-80221	106	528F0-52311	232	531A0-50151	228
522A2-18371	155	522A6-80301	111	528F0-52331	232	531A0-50161	228
522A2-18371	155	522A6-80311	111	528F0-52341	232	531A0-52041	228
522A2-18391	155	522A6-80321	111	528F0-52351	232	531A0-52061	228
522A2-18391	155	522A6-80401	113	528F0-52431	232	531A0-52091	229
522A2-18541	154	522A6-80411	113	528F0-52441	232	531A0-52321	229
522A2-18541	154	522A6-80421	113	528F0-52451	232	531A0-52521	52
522A2-18551	154	522A6-80431	113	528F0-52461	232	531A0-52601	228
522A2-18551	154	522A6-80441	113	528F0-52501	236	531A0-52611	228
522A2-18561	154	522A6-80451	113	528F0-52511	236	531A0-52621	228
522A2-18561	154	522A6-80501	118	528F0-52521	236	531A0-52631	228
522A2-18571	154	522A6-80511	118	528F0-52531	236	531A0-52641	228
522A2-18571	154	522A6-80521	118	528F0-52541	236	531A0-52651	228
522A2-18581	154	522A7-12211	39	528F0-52551	236	531A0-52661	228
522A2-18581	154	522A7-22011	61	528F0-52561	236	531B2-70251	34
522A2-18591	154	522A7-22011	62	528F0-52571	236	531B2-70261	34
522A2-18591	154	522A7-22011	63	528F0-52581	236	531B2-70271	34
522A2-42001	40	522B0-92021	9	528F0-52591	236	531B2-70281	34
522A2-60553	89	522B0-92031	9	528F0-52601	236	531B2-72041	1
522A2-60563	89	522B0-92041	9	528F0-52611	236	531B2-72051	1

Part No.	Fig.No.	Part No.	Fig.No.	Part No.	Fig.No.	Part No.	Fig.No.
531B2-72061	1	53320-55121	237	534A3-70031	96	534A5-00401	135
531B2-72071	1	53320-55131	237	534A3-70031	96	534A5-00401	135
531B2-72091	1	53320-55141	237	534A3-70031	98	534A5-00411	135
531B4-70011	1	53320-55151	237	534A3-70031	98	534A5-12321	134
53130-12091	62	53320-55161	237	534A3-70101	96	534A5-12331	134
53130-12091	63	53320-55171	237	534A3-70101	96	534A5-12571	135
532B3-82201	16	53320-55181	235	534A3-70101	98	534A5-32311	182
532B3-82201	19	53320-55181	237	534A3-70101	98	534A5-33001	64
532N6-52011	17	53320-55201	236	534A3-72111	96	534A6-80171	108
532N6-52011	20	53320-55221	236	534A3-72111	96	534A6-80271	120
533A0-50351	233	53320-55231	236	534A3-72111	98	534A6-85001	120
533A0-52051	51	53320-55241	236	534A3-72111	98	534A6-85011	108
533A0-52051	54	53320-55251	236	534A3-72121	96	534A7-02001	40
533A0-52111	232	53320-55281	236	534A3-72121	96	534A7-22101	60
533A0-52121	234	53320-55331	236	534A3-72121	98	534A7-22101	60A
533A0-52131	232	53320-55381	236	534A3-72121	98	534A7-22201	61
533A0-52141	233	53320-55401	235	534A3-82311	222	534A7-22201	62
533A0-52151	232	53320-55411	235	534A3-82311	223	534A7-22201	63
533A0-52301	232	53320-55421	235	534A3-82311	224	534A7-22211	61
533A0-52311	232	53320-55431	235	534A3-82311	225	534A7-22211	62
533A0-52331	232	53320-55432	235	534A3-82311	226	534A7-22211	63
533A0-52341	232	53320-55441	235	534A3-82321	224	534A7-50101	66
533A2-40201	122	53320-55491	235	534A3-82331	222	534A7-50301	69
533A2-40211	122	53320-55521	235	534A3-82331	224	534A7-50401	69
533A2-40402	97	53320-55621	235	534A3-82341	222	534A7-50501	69
533A2-40502	97	53320-55701	235	534A3-82341	224	534A7-50601	70
533A2-40552	97	53320-55731	235	534A3-82351	224	534A7-50601	71
533A2-40552	97	534A0-60011	5	534A3-82361	224	534A7-50601	72
533A2-42001	122	534A0-62001	5	534A3-82361	226	534A7-52011	88
533A2-42021	122	534A0-62011	5	534A3-82371	224	534A7-52011	88A
533A2-42032	97	534A0-82101	27	534A3-82381	224	534A7-52301	69
533A2-42042	97	534A0-82101	28	534A3-82391	224	534A7-52401	69
533A2-42071	97	534A0-82101	28A	534A3-82401	226	534A7-52501	69
533A2-42101	97	534A1-64402	247	534A3-82411	226	534A7-72001	37
533A2-42202	97	534A1-64402	255	534A3-82421	222	534A7-72001	38
533A2-42202	97	534A1-64412	247	534A3-82421	223	534A9-22001	133
533A2-42212	97	534A1-64412	255	534A3-82421	224	534A9-22011	133
533A2-42212	97	534A2-40402	191	534A3-82421	225	534A9-22101	133
533B0-52001	230	534A2-40502	192	534A3-82421	226	534A9-22211	50
533B0-52001	230	534A2-40502	192	534A3-82431	224	534A9-22301	133
533B0-52011	230	534A2-40602	193	534A3-82441	222	534A9-92131	51
533B0-52011	230	534A2-40602	193	534A3-82441	224	534A9-92131	52
53320-50401	232	534A2-40702	194	534A3-82451	222	534A9-92131	53
53320-50401	237	534A2-40702	194	534A3-82451	224	534A9-92131	54
53320-52322	230	534A2-74001	247	534A3-82461	224	534B3-80281	83
53320-52331	230	534A2-74001	255	534A3-82471	224	534B8-30201	85
53320-55001	236	534A2-74051	247	534A3-82471	226	534B8-32011	85
53320-55001	237	534A2-74051	255	534A3-82481	224	534B8-32021	85
53320-55011	237	534A2-74101	247	534A3-82491	224	534B8-32031	85
53320-55021	237	534A2-74101	255	534A3-82501	224	534B8-32041	85
53320-55031	237	534A2-74201	247	534A3-82511	226	534B8-32051	85
53320-55041	237	534A2-74201	255	534A3-82521	226	534B8-39811	85
53320-55051	237	534A2-74301	247	534A3-82531	222	534F3-82001	114
53320-55061	237	534A2-74301	255	534A4-22001	133	534F3-82001	116
53320-55071	236	534A3-04001	250	534A4-22011	133	534F3-82001	118
53320-55071	237	534A3-04001	258	534A4-22101	133	534F3-82001	120
53320-55081	237	534A3-70021	96	534A4-60202	191	534G3-80101	80
53320-55091	237	534A3-70021	96	534A4-60302	192	534G3-80102	80
53320-55101	237	534A3-70021	98	534A4-60402	193	534G8-30101	80
53320-55111	237	534A3-70021	98	534A4-60502	194	534G8-30102	80

Part No.	Fig.No.	Part No.	Fig.No.	Part No.	Fig.No.	Part No.	Fig.No.
53450-53161	228	536G3-82071	224	53656-82051	113	53675-55051	208
53450-53171	228	536G3-82081	226	53656-82061	103	53675-55051	209
53456-80502	104	536G3-82091	226	53656-82061	105	53675-55051	244
53456-80702	104	536G3-82201	39	53656-82061	107	53675-55051	260
53456-80902	102	536G4-70101	1	53656-82061	109	537A0-50321	234
53456-80902	104	536G4-70101	1	53656-82061	112	537A0-50322	234
53456-82052	111	536G7-60101	1	53656-82061	112	537A0-50331	234
53456-82062	111	536K6-02271	35	53656-82061	113	537A0-50332	234
53457-40003	110	536K6-02271	36	53656-82061	113	537A0-50341	234
53457-42151	110	536S4-70101	1	53657-42053	110	537A0-50342	234
535C2-60401	168	536S7-60101	1	53657-42081	88	537A0-50361	234
535C2-60401	168A	53651-12551	3	53657-42081	88A	537A0-52001	161
535C8-92051	58	53651-12551	4	53657-42091	88	537A0-52101	232
535E3-82231	224	53651-12551	4A	53657-42091	88A	537A0-52121	234
535E3-82231	226	53651-12551	5	53658-42011	250	537A0-52501	171
535E3-82241	224	53651-12551	5A	53658-42011	258	537A0-52501	171
535E3-82241	226	53652-82011	222	53658-43001	251	537A0-52511	171
535H3-82261	156	53652-82011	224	53658-43001	259	537A0-52511	171
535H3-82411	224	53652-82352	222	53658-43011	251	537A0-52521	171
535H3-82411	226	53652-82352	224	53658-43011	259	537A0-52521	171
535H3-82421	224	53652-82401	222	53658-43021	251	537A0-52531	171
535H3-82431	224	53652-82401	224	53658-43021	259	537A0-52531	171
535H3-82441	224	53652-82541	222	53658-43031	251	537A0-80101	23
535H3-82451	224	53652-82551	222	53658-43031	259	537A0-80102	23A
535H3-82461	224	53656-80201	112	53658-43041	251	537A0-80301	27
535H3-82461	226	53656-80211	112	53658-43041	259	537A0-80301	28
535H3-82471	224	53656-80401	113	53666-80201	105	537A0-80301	29
535H3-82481	224	53656-80411	113	53666-80401	107	537A0-80302	27
535H3-82491	224	53656-80501	112	53666-80501	105	537A0-80302	28A
535H3-82501	226	53656-80511	112	53666-80601	103	537A0-80302	29
535H3-82511	226	53656-80601	112	53666-80601	105	537A0-80401	23
536B6-60301	10	53656-80611	112	53666-80701	105	537A0-80402	23A
536B6-60302	10	53656-80701	112	53666-80901	117	537A0-82001	27
536F0-50301	232	53656-80711	112	53666-81301	119	537A0-82001	28
536F0-50351	236	53656-80901	112	53666-81401	117	537A0-82001	28A
536F1-70101	1	53656-80901	113	53666-81501	115	537A0-82001	29
536F1-70111	1	53656-80911	112	53666-81501	117	537A0-82011	27
536F4-70101	1	53656-80911	113	53666-81601	117	537A0-82011	28
536F7-60101	1	53656-81301	118	53666-81801	103	537A0-82011	28A
536G1-70101	1	53656-81301	118	53666-81801	105	537A0-82011	29
536G1-70111	1	53656-81401	116	53666-81801	105	537A1-70001	23
536G1-70201	23	53656-81501	114	53666-81801	107	537A1-70001	23A
536G1-70201	23A	53656-81501	116	53666-81901	115	537A1-70011	23A
536G2-82021	222	53656-81601	116	53666-81901	117	537A1-72101	23
536G2-82181	222	53656-82001	111	53666-81901	117	537A1-72101	23A
536G2-82181	223	53656-82041	103	53666-81901	119	537A2-72011	43
536G2-82181	224	53656-82041	105	53666-82021	115	537A2-72021	43
536G2-82181	225	53656-82041	107	53666-82021	117	537A3-72021	43
536G2-82181	226	53656-82041	109	53666-82021	119	537A6-52001	16
536G2-82281	222	53656-82041	112	53666-82031	115	537A6-60301	10
536G3-82001	222	53656-82041	112	53666-82031	117	537A6-60302	10
536G3-82001	224	53656-82041	113	53666-82031	119	537B2-72011	44
536G3-82011	222	53656-82041	113	53666-82041	115	537B2-72021	44
536G3-82011	224	53656-82051	103	53666-82041	117	537B3-72021	44
536G3-82021	224	53656-82051	105	53666-82041	119	537B3-80001	80
536G3-82031	224	53656-82051	107	53675-54101	244	537B3-80002	80
536G3-82041	224	53656-82051	109	53675-54101	260	537B4-50001	80
536G3-82041	226	53656-82051	112	53675-55051	205	537B4-50002	80
536G3-82051	224	53656-82051	112	53675-55051	206	537H6-50101	17
536G3-82061	224	53656-82051	113	53675-55051	207	537H6-52001	17

Part No.	Fig.No.	Part No.	Fig.No.	Part No.	Fig.No.	Part No.	Fig.No.
538A0-80101	24	539A2-42001	94A	539A3-91381	248	539A6-22021	39
538A0-80102	24	539A2-42011	94	539A3-91401	256	539A6-22021	40
538A0-80401	24	539A2-42011	94A	539A3-91411	256	539A6-42101	168
538A0-80402	24	539A2-60111	130	539A3-91421	256	539A6-42101	168
538A0-80501	24	539A2-60221	130	539A3-91431	256	539A6-42101	168A
538A0-80502	24	539A2-60231	126	539A3-91441	256	539A6-42101	168A
538A1-70001	24	539A2-60301	91	539A3-91451	256	539A6-42111	168
538A1-70011	24	539A2-60601	167	539A3-91461	256	539A6-42111	168
538A1-72101	24	539A2-62301	91	539A3-91471	256	539A6-42111	168A
538A3-72021	45	539A2-62321	91	539A3-91481	256	539A6-42111	168A
538A6-52001	18	539A2-72121	40	539A3-91491	256	539A6-52051	16
538B3-72021	47	539A2-80111	130	539A3-91501	256	539A6-52051	18
538B6-60301	13	539A2-80151	130	539A5-00111	129	539A6-52051	19
538B6-60301	14	539A2-80161	130	539A5-00121	129	539A6-52151	16
538B6-60302	13	539A2-80172	127	539A5-00131	129	539A6-52151	18
538B6-60302	14	539A2-80172	127	539A5-00141	129	539A6-52151	19
538F0-80101	25	539A2-80182	127	539A5-00152	127	539A6-60301	11
538F0-80102	25	539A2-80182	127	539A5-00152	127	539A6-60301	12
538F0-80401	25	539A2-80192	127	539A5-00162	127	539A6-60301	14
538F0-80402	25	539A2-80192	127	539A5-00162	127	539A6-60302	11
538F0-80501	25	539A2-80202	127	539A5-00172	127	539A6-60302	12
538F0-80502	25	539A2-80202	127	539A5-00182	127	539A6-60302	14
538F1-70001	25	539A2-80221	130	539A5-00261	135	539A6-80201	106
538F1-70011	25	539A2-80301	126	539A5-00351	129	539A6-80301	118
538F1-72101	25	539A2-80371	130	539A5-00361	129	539A7-22011	60
538F3-72021	46	539A2-80501	126	539A5-00371	129	539A7-22061	60
538F5-92321	31	539A2-80571	130	539A5-00381	129	539A7-22061	60
538F6-52001	19	539A2-82251	130	539A5-00401	125	539A7-22061	60A
538F7-60102	2	539A2-90201	125	539A5-00501	125	539A7-22211	60
538F7-60103	2	539A2-90301	126	539A5-00601	125	539A7-22211	60A
538F7-60201	19	539A2-90401	126	539A5-00701	125	539A7-22301	62
538G2-60201	140A	539A3-70021	96	539A5-10501	135	539A7-22511	60
538G2-60202	140A	539A3-70021	98	539A5-12001	135	539A7-22512	60
538G3-72021	48	539A3-70031	96	539A5-12001	135	539A7-22513	60A
538G3-80201	2	539A3-70031	98	539A5-12011	132	539A7-22611	60A
538G3-80202	2	539A3-70101	96	539A5-12041	132	539A7-42001	101
538G3-82201	40	539A3-70101	98	539A5-12101	134	539A7-42011	101
538S3-72001	158	539A3-72111	96	539A5-30251	181	539A7-42021	101
538S3-72001	159	539A3-72111	98	539A5-30261	181	539A7-42031	101
538S6-50101	20	539A3-72121	96	539A5-30601	168	539A7-42061	101
538S6-52001	20	539A3-72121	98	539A5-30602	168A	539A7-42071	101
538S7-60102	2	539A3-72151	41	539A5-30701	168A	539A7-52001	70
538S7-60201	20	539A3-91201	248	539A5-32091	181	539A7-52001	71
539A0-82201	23A	539A3-91211	248	539A5-32201	172	539A7-52001	72
539A0-82201	24	539A3-91221	248	539A5-32301	181	539A7-52041	69
539A0-82201	25	539A3-91231	248	539A5-32311	172	539A7-52101	71
539A0-90111	129	539A3-91241	248	539A5-32361	52	539A7-52101	72
539A1-32001	134	539A3-91251	248	539A5-32541	172	539A7-52311	69
539A1-42201	55	539A3-91261	248	539A5-32651	172	539A7-52411	69
539A1-42201	56	539A3-91271	248	539A5-42351	169	539A7-52511	69
539A1-42201	57	539A3-91281	248	539A5-42351	169A	539A7-62201	172
539A1-64101	246	539A3-91291	248	539A5-92131	26	539A7-72001	35
539A1-64111	246	539A3-91301	248	539A5-92141	26	539A7-72001	36
539A1-64201	254	539A3-91311	248	539A5-92251	26	539A8-22101	64
539A1-64211	254	539A3-91321	248	539A5-92261	26	539A8-22151	64
539A2-32001	74	539A3-91331	248	539A5-92341	31	539A8-92111	55
539A2-32001	78	539A3-91341	248	539A5-92371	26	539A8-92111	56
539A2-32041	74	539A3-91351	248	539A5-92441	30	539A8-92111	57
539A2-32041	78	539A3-91361	248	539A6-22001	73	539A8-92111	58
539A2-42001	94	539A3-91371	248	539A6-22011	73	539A8-92251	58

PARTS NUMBER INDEX

Part No.	Fig.No.	Part No.	Fig.No.	Part No.	Fig.No.	Part No.	Fig.No.
539A8-92251	71	539H6-52251	17	56110-63521	63	89140-00006	94
539A8-92251	71	539H6-52251	20	57042-72091	49	89140-00006	94
539A8-92251	72	539H6-52351	17	57045-52141	100	89140-00006	94A
539A8-92251	72	539H6-52351	20	57045-52151	100	89140-00006	94A
539A9-02001	59	542F3-80101	182A	571A3-82361	222	89140-00006	94A
539A9-02011	59	542F3-80201	183A	571A3-82361	223	89140-00006	94A
539A9-32001	135	542F3-80201	184A	571A3-82361	224	89140-00006	144
539A9-62001	238	542F3-82001	182A	571A3-82361	225	89140-00006	144
539A9-92001	37	542F3-82001	183A	571A3-82361	226	89140-00006	146
539A9-92001	38	542F3-82001	184A	571A6-82081	118	89140-00006	147
539A9-92051	51	542F3-82011	182A	577H3-72181	181	93956-59279	37
539A9-92051	54	542F3-82011	183A	577P3-74001	240	93956-59279	38
539A9-92101	51A	542F3-82011	184A	577P3-74001	240		
539A9-92201	168A	542F3-82021	182A	577P3-74001	242		
539B2-32201	42	542F3-82021	183A	577P3-74001	242		
539B2-60201	140	542F3-82021	184A	577P3-74001	246		
539B3-72151	42	54240-52021	232	577P3-74001	248		
539B3-72201	42	54240-52151	235	577P3-74001	248		
539B3-82301	42	54240-52691	235	577P3-74001	254		
539B4-50001	80	54240-52701	235	577P3-74001	256		
539B4-50002	80	54240-55021	235	577P3-74001	256		
539B6-92111	68	54280-52011	230	577P3-74001	256		
539B6-92211	68	54612-42021	3	577P3-74011	240		
539B7-42001	101	55530-52101	230	577P3-74011	240		
539B7-42011	101	55530-52101	230	577P3-74011	242		
539B7-42021	101	55530-52211	231	577P3-74011	246		
539B7-42031	101	55530-52211	234	577P3-74011	248		
539B7-42061	101	55530-52221	231	577P3-74011	254		
539B7-42071	101	55530-52221	234	577P3-74011	256		
539B7-52031	70	55592-82001	222	577P3-74011	256		
539B7-52031	71	55592-82001	223	577P3-74021	259		
539B7-52031	72	55592-82001	224	577P3-74031	259		
539C0-90051	130	55592-82001	225	58106-31011	40		
539C0-90061	130	55592-82001	226	59595-55301	122		
539C1-90101	131	55593-02371	203	62150-14321	260		
539C1-90151	53	55593-62061	79	62156-52501	109		
539C1-90211	131	55593-62551	252	62459-23371	249		
539C1-90401	168	55597-22111	61	62459-23371	249		
539C1-90401	168	55597-22111	62	62459-23371	257		
539C1-90402	168A	55597-22111	63	63110-18921	254		
539C1-90402	168A	556C7-22001	60	63130-25614	191		
539C1-90501	28	556C7-22001	60A	63130-25614	192		
539C1-90502	28A	55792-52601	69	63130-25614	193		
539C1-90521	28	55792-52611	69	63130-25614	194		
539C1-90521	28A	55792-52621	69	639A0-10011	249		
539C1-92301	170	55792-52641	69	639A0-10011	249		
539C1-92311	170	558A9-92001	51	639A0-10011	257		
539C1-92401	170	558A9-92001	51A	639A0-10051	249		
539C1-92501	28	558A9-92001	52	639A0-10051	249		
539C1-92501	28A	558A9-92001	54	639A0-10051	257		
539C1-92541	170	558A9-92001	54	78470-98028	87		
539C1-92551	170	558A9-92001	54	78658-42012	87		
539C1-92611	54	558A9-92001	70	79562-61202	87		
539G3-72001	158	558A9-92001	72	79562-61203	87		
539H6-52051	17	55812-42011	64	80110-00628	94		
539H6-52051	20	55952-18021	155	80110-00628	94A		
539H6-52151	17	55952-18021	155	80430-00006	94		
539H6-52151	20	55953-02032	224	80430-00006	94A		
539H6-52201	173	56110-63521	61	89140-00006	94		
539H6-52202	173	56110-63521	62	89140-00006	94		

No.PF-36AD

2001年　12月　発行
2003年　1月　改訂
2003年　6月　改訂
2004年　9月　改訂

TCM株式会社
本　社　大阪市西区京町堀1－15－10

発行　TCMテクノ株式会社

ISSUED:DECEMBER,2001
REVISED:JANUARY,2003
REVISED:JUNE,2003
REVISED:SEPTEMBER,2004

TCM CORPORATION
INTERNATIONAL MARKETING DIVISION : 1-15-5, Nishi－shimbashi, Minato－ku, Tokyo
105－0003, Japan
FAX : Japan +81－3－35918152, 3－35918153

無断で転載・複製を禁ず
All rights reserved.

SA－0409001(H)　Printed in Japan